January 1994

A STUDY TO DETERMINE THE BIOLOGICAL FEASIBILITY OF A NEW FISH TAGGING SYSTEM (1990-93)

DOE/BP-11982-5

DOE/BP-11982-5

This report was funded by the Bonneville Power Administration (BPA), U.S. Department of Energy, as part of BPA's program to protect, mitigate, and enhance fish and wildlife affected by the development and operation of hydroelectric facilities on the Columbia River and its tributaries. The views of this report are the author's and do r necessarily represent the views of BPA.

This document should be cited as follows:

Prentice,Earl F., Desmond J. Maynard, Sandra L. Downing, Deborah A. Frost, Michael S. Kellett, Douglas A. Bruland, Pamela Sparks-McConkey, F. William Waknitz, Robert N. Iwamoto, Kenneth McIntyre, Neil Paasch, Coastal Zone and Estuarine Studies Division, Northwest Fisheries Science Center, National Marine Fisheries Service, National Oceanic and Atmospheric Administration, U. S. Department of Energy, Bonneville Power Administration, Division of Fish and Wildlife, Project Number 83-3 19, Contract NumberDE-AI79-84BP11982, 272 electronic pages (BPA Report DOE/BP-11982-5)

This report and other BPA Fish and Wildlife Publications are available on the Internet at:

http://www.efw.bpa.gov/cgi-bin/efw/FW/publications.cgi

For other information on electronic documents or other printed media, contact or write to:

Bonneville Power Administration
Environment, Fish and Wildlife Division
P.O. Box 3621
905 N.E. 11th Avenue

This report was funded by the Bonneville Power Administration (BPA), U.S. Department of Energy, as part of BPA's program to protect, mitigate, and enhance fish and wildlife affected by the development and operation of hydroelectric facilities on the Columbia River and its tributaries. The views in this report are the author's and do not necessarily represent the views of BPA.

For additional copies of this report, write to:

Bonneville Power Administration
Public Information Center - CKPS-1
P.O. Box 3621
Portland, OR 97208

Please include title, author, and DOE/BP number from the back cover in the request.

A STUDY TO DETERMINE THE BIOLOGICAL FEASIBILITY OF A NEW FISH TAGGING SYSTEM (1990-93)

Prepared by:

Earl F. Prentice
Desmond J. Maynard
Sandra L. Downing
Deborah A. Frost
Michael S. Kellett
Douglas A. Bruland
Pamela Sparks-McConkey
F. William Waknitz
Robert N. Iwamoto
Kenneth McIntyre
and
Neil Paasch

Coastal Zone and Estuarine Studies Division
Northwest Fisheries Science Center
National Marine Fisheries Service
National Oceanic and Atmospheric Administration
Seattle, WA 98 112-2097

Prepared for:

U.S. Department of Energy
Bonneville Power Administration
Division of Fish and Wildlife
P.O. Box 3621
Portland, OR 97208-362 1

Project Number 83-3 19
Contract Number DE-AI79-84BP 11982

1994

CONTENTS

	Page
EXECUTIVE SUMMARY	viii
INTRODUCTION	1
INTERROGATION AND SEPARATION SYSTEMS AT COLUMBIA RIVER BASIN DAMS	2
Modifications or Installations of Interrogation and Separation Systems	7
Bonneville Dam	7
McNary Dam	7
Lower Monumental Dam	9
Little Goose Dam	9
Lower Granite Dam	12
Summary, Conclusions, and Recommendations	15
Evaluation of the PIT-tag Interrogation System for Juvenile Salmon at Little Goose Dam: Tag-Reading Efficiency	17
Introduction	17
Materials and Methods	17
Results and Discussion	18
Summary, Conclusions, and Recommendations	22
Evaluation of the PIT-tag Interrogation System for Adult Salmon at Lower Granite Dam: Tag-Reading Efficiency	23
Introduction	23
Materials and Methods	23
Results and Discussion	25
Summary, Conclusions, and Recommendations . . .	29

SYSTEMS DEVELOPMENT AND EVALUATION 30

PIT-tag Monitors for Juvenile Salmon: Comparing Fish Passage Time through Four Types of Passageways 31

Introduction . . . . . , ... 31

Materials and Methods 31

Results 34

Discussion . . . . . , ... 39

Summary, Conclusions, and Recommendations 44

PIT-tag Monitors for Juvenile Salmon: Fish Passage and Light 46

Introduction 46

Materials and Methods 46

Results 49

Discussion 51

Summary, Conclusions, and Recommendations 54

PIT-tag Monitors for Juvenile Salmon: Field Evaluation of an Instream Model 55

Introduction 55

Materials and Methods 56

Results 61

Discussion 66

Summary, Conclusions, and Recommendations 68

Development and Evaluation of a Separation System for Specific PIT-tag Codes 70

Introduction 70

Materials and Methods 70

Results 77

Discussion 82

Summary, Conclusions, and Recommendations 86

Fixed-Reference Tag 89

INVESTIGATIONS OF TAGGING EFFECTS 90

Vulnerability of Marked Steelhead to a Visually Hunting Predator in Clear Water 90

Introduction 90

Materials and Methods 92

Results 93

Discussion 93

Summary, Conclusions, and Recommendations 96

Vulnerability of Marked Steelhead to Steelhead Predators in Tinted Water and Squawfish Predators in Clear Water 97

Introduction 97

Materials and Methods 97

Results 98

Discussion 102

Summary, Conclusions, and Recommendations 104

Comparative Overwinter Survival of Tagged and Untagged Juvenile Coho Salmon 105

Introduction 105

Materials and Methods 106

Results 110

Discussion 117

Summary, Conclusions, and Recommendations 120

Comparison of Long-term Effects of PIT Tags and CW Tags on Coho salmon (*Oncorhynchus kisutch*) 123

Introduction 123

Materials and Methods 123

Results and Discussion 126

Summary, Conclusions, and Recommendations 135

STUDIES ON INTERROGATION SYSTEMS FOR ADULT SALMON 138

PIT-tag Interrogation Systems for Adult Salmon: Effects of Picket V-leads, Supplemental Lighting and Electromagnetic Fields on Fish Passage 138

Introduction . . . , ... 138

Materials and Methods 139

Results 144

Discussion . . . . . , ... 148

Summary, Conclusions, and Recommendations 149

PIT-tag Interrogation Systems for Adult Salmon: Electromagnetic Field Exposure 151

Introduction 151

Materials and Methods 151

Results 153

Discussion 155

Summary, Conclusions, and Recommendations 156

Electromagnetic Field Effects on Reproducing Fish: Medaka (*Oryzias latipes*) 157

Introduction 157

Materials and Methods 158

Results 164

Discussion 170

Summary, Conclusions, and Recommendations 171

Electromagnetic Field Effects on Developing Zygotes: Chum Salmon (*Oncorhynchus keta*) 173

Introduction 173

Materials and Methods 173

Results 177

Discussion 179

Summary, Conclusions, and Recommendations 182

Development of an Extended-range PIT-tag Monitor for Adult Salmon: Technical and Biological Considerations 184

Technical Development 184

Biological Evaluation 187

Current Development Issues 197

Summary, Conclusions, and Recommendations 198

INFORMATION AND TECHNOLOGY TRANSFER 200

Management and Maintenance of PIT-tag Database and Interrogation Systems 200

Operation and Procedure Documentation . . . . . , . . 202

LITERATURE CITED 203

ACKNOWLEDGMENTS 209

APPENDIX A
Outmigrant Recovery and Growth of Overwintering Juvenile Coho Salmon (*Oncorhynchus* kisutch) Marked with Sequential Coded-Wire and Passive-Integrated-Transponder Tags . . . 210

APPENDIX B
Extended-range fish monitor system description 221

APPENDIX C
Extended-range fish monitor tests, with three loop detectors immersed in water 243

EXECUTIVE SUMMARY

A multiyear program to evaluate the technical and biological feasibility of a new identification system for salmonids was established between the Bonneville Power Administration (BPA) and the National Marine Fisheries Service (NMFS) in 1983. This identification system is based upon a miniaturized passive-integrated-transponder (PIT) tag. This report discusses the work completed from 1990 through 1993.

Interrogation systems energize PIT tags and process their identification codes into a usable form. Separation systems use slide-gate assemblies to separate PIT-tagged juvenile salmon from untagged fish. At the center of both interrogation and separation systems are dual-coil PIT-tag monitors. These monitors and generalized PIT-tag interrogation and separation systems are described in this report.

From 1990 to 1993, there was a continuing effort to expand and improve PIT-tag facilities at Columbia River Basin dams. Specific activities were tailored to unique situations at each dam. For example, at Lower Granite Dam, modifications to the separation system were performed. At Little Goose Dam, the new juvenile fish collection facility was finished by the U.S. Army Corps of Engineers (COE) in 1990, and updated PIT-tag interrogation and separation systems were installed in 1993. At Lower Monumental Dam, construction of a new juvenile fish collection facility, which will include PIT-tag interrogation and separation systems, was started by COE in 1992. Permanent PIT-tag interrogation and separation systems are scheduled to be operational by spring 1994. At McNary Dam, Pacific States Marine Fisheries Commission (PSMFC) will install a new juvenile fish

collection facility, which will include PIT-tag interrogation and separation systems. Construction on this facility started in 1993 and is scheduled to be completed in 1994. At Bonneville Dam, concept drawings for new sampling and fish interrogation facilities were completed in 1991. BPA and COE are presently working on construction plans, project scheduling, and funding for these new facilities.

Periodically, interrogation systems for juvenile and adult salmon are evaluated directly by the release of a known number of PIT-tagged fish. Tag-reading efficiencies are determined by the percentage of these fish read by PIT-tag monitors. The interrogation systems for juvenile salmon at Little Goose Dam and adult salmon at Lower Granite Dam were evaluated in 1990 and 1991. An acceptable reading efficiency of ≥ 95% was established for monitors at dams within the Columbia River Basin. Tests using juvenile chinook salmon (*Oncorhynchus tshawytscha*) and steelhead (0. *mykiss*) yielded reading efficiencies of 96.9 and 94.7%, respectively, while tests using tagged adult steelhead yielded a reading efficiency of 100%.

From 1990 to 1993, an effort to improve and expand the capability of PIT-tag equipment was undertaken. In 1989, NMFS began to develop a new class of PIT-tag monitors that could interrogate volitionally swimming juvenile fish. During 1990 and 1991, three more studies were conducted to further develop these PIT-tag monitors. In the first, the responses of chinook salmon and steelhead to four test passageways (an open channel, transparent tube, and inactive and active PIT-tag monitors) were examined. These tests suggested that reduced light within the inactive or active PIT-tag monitor was the determining factor in altering fish passage behavior and not the electromagnetic field (EMF) or hydraulic flow through the tube. As a result, we

recommended that monitors be designed to enable ambient light or artificial illumination to enter the passageways.

Based upon the results showing the importance of light in passageways to juvenile fish passage, a second study was conducted with juvenile chinook salmon to determine if the light spectrum was important. The study compared passage through an open channel (natural lighting) and a covered channel that was artificially illuminated with two types of daylight fluorescent lights. Overall passage percentages through the test channel were similar for the three groups, and we concluded that the light spectrum used in the fish passageway does not appear to be critical.

In the third study, an instream juvenile PIT-tag monitor with an artificially illuminated channel was evaluated with two proportions (20 and 100%) of PIT-tagged smolts to determine if reading efficiency of the monitor was affected by the different tag densities. When multiple erroneous tag codes were produced by this instream monitor, we designed and tested a double-read software program for the firmware used in the monitors.

The ability of the instream monitor to read tags varied with both tag density and firmware. Reading efficiency of the monitor was reduced by the tendency of the juvenile chinook salmon to swim in groups and to make multiple trips through the instream monitor. Changing from single-read to double-read firmware solved the multiple trip problem. The instream monitor was able to read tags more efficiently when there was a lower proportion of PIT-tagged fish, because a monitor cannot read tag codes when two or more PIT-tagged fish swim through a coil simultaneously. However, since passing fish rarely swim in synchronous formation for more than a few milliseconds

(msec), having a second monitor would eliminate much of the error introduced by higher proportions of tagged fish. Therefore, we recommended a minimum of three coils be installed into instream monitors to improve reading efficiency.

The next two studies were directed at developing technology to improve the performance of the interrogation and separation systems at the Columbia River Basin dams. Presently at the dams, PIT-tagged fish are separated from non-PIT-tagged fish by a slide gate that is triggered to open when any PIT tag is read. In this first study, a prototype computer program that separated tagged fish based on their specific PIT-tag codes was developed and evaluated with both tagged wooden sticks and juvenile salmon. A testing apparatus that simulated part of a juvenile fish bypass/collection facility, including a separation system, was constructed at the NMFS Manchester Marine Experimental Station. Initially, the separation system was set up with the standard components used at the dams (single-read firmware and nonadjustable slide gate). With this standard setup, the computer program was tested by separating specific tag codes that represented three tag-code densities (20, 50, and 80%) within the population. Then, two modifications of the separation system (an adjustable slide gate and double-read firmware) were also evaluated.

The separation-by-code computer program performed well, proving that it was possible to separate individually tagged wooden sticks and fish based on their specific PIT-tag codes. For the stick trials, reading efficiencies and gate efficiencies were > 95% for the three setups at each of the three tag-code densities. The adjustable slide gate had a tendency to open up more than its assigned distance if a second tag triggered it before it had completely closed. This

resulted in a significantly lower overall gate efficiency for the adjustable slide gate ($\bar{x}$ = 98.4%) than for the nonadjustable slide gate ($\bar{x}$ = 99.4%). There was no significant difference in performance between single-read and double-read firmware reading tagged sticks at water velocities of 3 m/sec. Before installing the double-read firmware in PIT-tag monitors throughout the Columbia River Basin, we recommended that additional tests be conducted with fish and at water velocities of 4 m/sec.

In contrast to stick trials, the average reading efficiency for fish trials was below the 95% acceptable rate. Reading efficiencies ranged from 78 to 100% for fish trials and averaged 92.3%. Gate efficiencies were low, ranging from 63 to 92%, because fish, especially the larger ones, were observed swimming in the lower flume between the monitor and slide gate. To reduce these problems, we recommended 1) increasing the number of monitor coils from two to four and 2) decreasing the distance from the last monitor coil to the slide gate.

Knowing the operational status of each coil within a PIT-tag interrogation system is important from a system reliability and information standpoint. Fixed-reference tags were developed to provide this information on an hourly basis. Each fixed-reference tag operates independently and transmits a unique tag code, which is recorded in the permanent computer file. Thus, there is a record if a problem were to occur. Fixed-reference tags were tested successfully in 1993, and they will be installed into all Columbia River Basin interrogation systems during the 1994 field season.

To estimate the impact of PIT tagging on the post-release survival of fish, four studies were conducted. The first study

investigated whether marking trauma or mark conspicuousness increased predation on age-0 steelhead by age-2 steelhead in clear water. Results showed significantly more marked (19.4 to 21.3%) than unmarked (10.4%) age-0 fish were eaten by age-2 steelhead predators (P = 0.01). Although steelhead use visual and not olfactory cues for locating and attacking prey, fish with internal and external marks were preyed on at similar rates. The results suggested that a primary mechanism affecting post-release survival of marked fish may be increased vulnerability to predation due to changes in prey behavior.

Based upon these results, a second study was conducted using steelhead predators in tinted water and an alternative predator, northern squawfish (*Ptychocheilus oregonesis*), in clear water. In contrast to the first study, there was no significant difference between percentages of marked (16.4 to 20.8%) and unmarked (18.8%) age-0 steelhead eaten by age-2 steelhead predators in tinted water. This substantiated that steelhead rely upon visual and not olfactory cues as predators. The squawfish were relatively inactive at 10°C, the water temperature at which the study was conducted, and consequently, consumed few steelhead. Overall predation rates were 1.0-3.5% for one and 6.3-12.5% for six squawfish. Unlike the steelhead predators in clear water, there was no significant difference among percentages of marked and unmarked age-0 steelhead eaten.

A third study evaluated whether tagged juvenile coho salmon (*Oncorhynchus kisutch*) had lower overwinter survival in a natural stream habitat than untagged fish. Three tag types were used: PIT tags, coded-wire (CW) tags, and visual-implant-fluorescent (VIF) tags. Juvenile coho salmon were randomly assigned to five treatments

(untagged, PIT-tagged, CW-tagged, CW+VIF-tagged, and CW+PIT-tagged) and released at one lake and two stream sites. Two smolt traps were installed downstream from the release sites. When the fish were tagged, average fork lengths were not significantly different among the five treatments; however, the group of fish released into the lake was significantly shorter than those released into the upper and lower stream sites. Approximately 15% of the stream-released fish were captured at the lower smolt trap within 2 weeks of release. These fish were probably seeking permanent homes farther downstream. Since they did not overwinter in the stream, these fish were not included in the overwinter study.

After overwintering, smolts were trapped during their outmigration. Average migration times for the five treatments ranged from 113.1-116.7 calendar days and were not significantly different from each other. The untagged group had the highest smolt recovery rate (13.6%), but it was not significantly higher than rates for tagged groups (11.0-12.6%). Significantly more tagged fish were recovered from the lake release site (n = 142) than from either the upstream (n = 91) or downstream (n = 82) release sites. Mean fork lengths of the recovered fish were not significantly different among the five treatment groups. Although fish released into the lake had been significantly shorter, after overwintering, significantly shorter fish were recovered from the lower-stream release site ($\bar{x}$ = 117.6 mm) than from the lake ($\bar{x}$ = 150.8 mm) or upper-stream ($\bar{x}$ = 148.4 mm) sites. In July, electrofishing both the stream and lake captured only 29 resident coho salmon. It was concluded that the PIT tag affects in situ survival no more than the CW tag and that any tagging will generally decrease post-release survival of juvenile salmon.

The fourth study addressing the potential impact of PIT tags on fish compared hatchery return rates, tag retention, and growth between PIT-tagged, CW-tagged, and CW+PIT-tagged adult coho salmon. A total of 38,633 juvenile coho salmon were tagged over 2 years and released from Skagit Hatchery, Washington. At the time of tagging, length measurements were made electronically on half of the tagged fish. Fish returning to the hatchery were interrogated for PIT and CW tags, and fork lengths of all tagged fish were measured. Results indicated no difference in hatchery return rates or adult fork lengths between measured and unmeasured tagged fish.

Tag retention prior to release ranged from 99-100% for all groups. In the CW+PIT-tagged spawning adults, CW-tag retention was 98.48, and PIT-tag retention was 68%. There was a significant difference in loss of PIT tags between males (11.3%) and females (47.9%). Direct evidence showed that PIT-tag losses occurred primarily during late maturation while the fish were entering the hatchery or holding at the hatchery prior to spawning. Hatchery return rates were not significantly different between PIT- and CW-tagged fish after adjusting all data for tag loss. Returning PIT-tagged fish were significantly shorter (2.0 cm difference) than their CW-tagged counterparts.

During the preceding study, some of the return data was confirmed with a prototype picket V-lead interrogation system for adult salmon, which was installed at the entrance to the hatchery's holding pond. This interrogation system combined three single-coil PIT-tag monitors, each of which had a picket V-lead attached to its passageway entrance. To improve the design of this adult interrogation system, its components (e.g., picket V-leads and supplemental lighting) were

evaluated independently. These evaluations indicated that volitional passage of chinook and coho salmon was significantly reduced when the flume passage width was reduced from 91 cm to 15 cm using triple picket V-leads or a combination of picket V-leads and PIT-tag monitors. The evaluations also indicated that neither the passageway length nor the 400-kHz EMF within the monitors affected fish passage. In addition, more fish swam through an artificially illuminated, covered test flume than through an unlit, covered flume. Consequently, we recommended that covered passageways for adults be equipped with lights similar to those used for juveniles.

Due to concern about the strong EMFs generated within PIT-tag monitors, a study was conducted to measure the time adult salmon were exposed to the 400-kHz EMF in the prototype picket V-lead interrogation system. Returning coho salmon were timed as they volitionally entered and exited the interrogation system. In 1989, average exposure time was 2.3 minutes, while for two tests conducted in 1990, average exposure time averaged over 15 minutes, with approximately 8% of the fish being exposed for longer than 55 minutes. One fish was exposed for 13 hours.

Results showing EMF exposures to fish of over 55 minutes raised the concern of NMFS biologists that the prolonged exposures might have negative biological ramifications. Such a finding would preclude the installation of interrogation systems for volitionally swimming adult salmon. Therefore, two studies were conducted to determine if fish or their offspring are affected by EMFs. In the first study, medaka (*Oryzias latipes*) were exposed to EMFs during active breeding. Groups of medaka were assigned to one of the following five treatments: no EMF; a 400-kHz EMF for 14, 140, or 1,400 minutes; or a 125-kHz EMF for

1,400 minutes. The exposed adults and their offspring were monitored in terms of reproductive effort, survival, growth, and gross deformities among the hatched larvae. Although there was large variation within each treatment in terms of total egg production, overall there were no significant differences among the five treatments in either the mean number of eggs collected or the percentage of eggs fertilized.

Results indicated that the larval incubation period was the time of highest mortality for the offspring of EMF-exposed adults. Average larval mortality for the control group was 20.1%, but ranged from 27.3 to 33.7% for the EMF-exposed groups. In addition, the control group had fewer deformed hatched larvae (3.0%) than the EMF-exposed groups (5.0–11.5%). Data from second-generation fish indicated no significant differences in mean egg production, fertilization, larval mortality, or percent deformities. These results suggested that EMF exposure may affect the survival and performance of the first-generation offspring of EMF-exposed fish. The testing procedure is being modified to concentrate on evaluating first-generation offspring performance through the transition to exogenous feeding.

We conducted a second study to investigate EMF effects on exposed chum salmon (*Oncorhynchus keta*) zygotes. Fertilized eggs from 24 families were exposed to either no EMF, 125-kHz EMF, or a 400-kHz EMF for 24 hours. No significant differences were found in the number of survivors, average fork lengths, or percent deformities among the three treatments; however, there were significant differences among the 24 families. This pattern suggested the responses were not due to EMF exposure, but were genetically based. In addition to the survival, length, and deformity comparisons, we measured both pectoral

fins and eye orbits in eight families and analyzed each for morphometric asymmetry. No significant differences in asymmetry measurements were seen among the three treatments.

The chum salmon findings may have been more conclusive had the fish been maintained until they were actively eating because the transition to exogenous feeding is a critical period for survival. However, based on results from the medaka and chum salmon EMF-exposure studies, neither of which indicated significant differences between EMF-exposed and nonexposed groups, development of an extended-range interrogation system for adult salmon can proceed. To reduce potential negative effects from EMF exposure, we recommended designing future adult systems to limit EMF-exposure time.

Evaluations of the prototype picket V-lead interrogation system indicated that more adult salmon swam through the 91-cm barren flume (cross-sectional area = 5,551 cm^2) than the narrow, 15-cm flume (cross-sectional area = 915 cm') with monitors and picket V-leads in place. However, in 1991, the electronics limited the reading range of monitors to passageway openings that were ≤ 1200 cm^2. Therefore, an effort was made to expand the reading range of PIT-tag monitors. An extended-range PIT-tag monitor was designed with a single coil wrapped around a large passageway (cross-sectional area = 5,551 cm^2). An extended-range interrogation system, which combined three extended-range monitors, was developed and electronically tested by Destron-Identification Devices Inc.. This system design failed electronically because of interference between the currents induced in the coils and poor signal-to-noise ratios, which prevented PIT tags from being read.

An extended-range monitor was also biologically evaluated using adult coho salmon. No attempt was made to read PIT tags with the

monitor during this phase of testing. Results showed that passage ratios through the extended-range monitor were not significantly different whether a 400-kHz EMF was present or absent, or whether the passageway was directly or indirectly illuminated. The large opening probably allowed enough ambient light to enter the passageway so that the need for supplemental lighting was significantly reduced. Data also showed that radio-frequency (RF) emissions from the PIT-tag monitor exceeded Federal Communications Commission (FCC) acceptable levels for low power RF equipment. In light of these and other findings, alternative approaches to designing an extended-range monitor will be undertaken in 1994.

Once technology developed by NMFS is fully functional and reliable, it is transferred to other governmental agencies or to the private sector. Between 1990 and 1993, several aspects of the PIT-tag program reached this level of development. The PIT-tag information system (PTAGIS) processes, stores, and makes available tagging and recovery information to all interested parties. The responsibility for routine operation and maintenance of PIT-tag interrogation systems in the Columbia River Basin was transferred to PSMFC in 1993. The permanent PTAGIS database is now managed solely by PSMFC. Starting in 1994, PSMFC will take over the installation of new interrogation systems. The NMFS staff continues to train and assist PSMFC as needed.

To assist PSMFC and other users, an operation and maintenance manual was written to cover all aspects of the PIT-tag system used within the Columbia River Basin. The manual is presently available from PSMFC and will be updated periodically.

INTRODUCTION

In 1983, the National Marine Fisheries Service (NMFS) began a multiyear cooperative research program with the Bonneville Power Administration (BPA) to evaluate a new miniaturized identification system that could be used with salmonids. The system is referred to as the passive-integrated-transponder (PIT) tagging and interrogation system. The program has focused on determining the effects of PIT tags on juvenile and adult salmonids, as well as the development and evaluation of tagging and interrogation methods. Earlier results of the program have been reported in annual reports and journal articles cited in this report.

This report covers the work performed from 1990 through 1993. For convenience, the report is divided into three sections: 1) Interrogation and separation systems at Columbia River Basin dams; 2) Systems development and evaluation; and 3) Information and technology transfer.

INTERROGATION AND SEPARATION SYSTEMS AT COLUMBIA RIVER DAMS

Juvenile salmon are presently being marked with PIT tags in the Columbia River Basin. At select dams within the basin, both tagged and untagged salmon traverse juvenile bypass/collection facilities that include PIT-tag monitors of various dimensions. Cross-sectional areas of the passageway openings of these monitors range from 80 to 740 cm^2: these dimensions are critical for determining both electromagnetic field (EMF) strength within a monitor and fish response to a PIT-tag monitor passageway. As smolts pass through a monitor, they are subjected to the 400-kHz EMF that energizes the PIT tag. After being energized, the tag transmits its identification code, which is received and processed by other components of an interrogation system (Prentice et al. 1990a). Some juvenile collection facilities also include separation systems that sort PIT-tagged fish from non-PIT-tagged fish by triggering a slide gate to open each time a PIT tag is detected.

At the center of both interrogation and separation systems for juvenile salmonids are dual-coil PIT-tag monitors (Fig. 1). All dual-coil PIT-tag monitors are assembled with the following components: 1) an aluminum shield to control errant radio-frequency (RF) emissions and to provide weather protection for electronic components, 2) two excitation/detection coils wrapped around a non-metallic fish passageway, 3) a tuner for each coil within the shield box, 4) a dual power supply, 5) a water-cooled dual exciter, 6) a power filter, and 7) a controller housing the reader firmware and supporting electronics (Prentice et al. 1990a). It is possible to

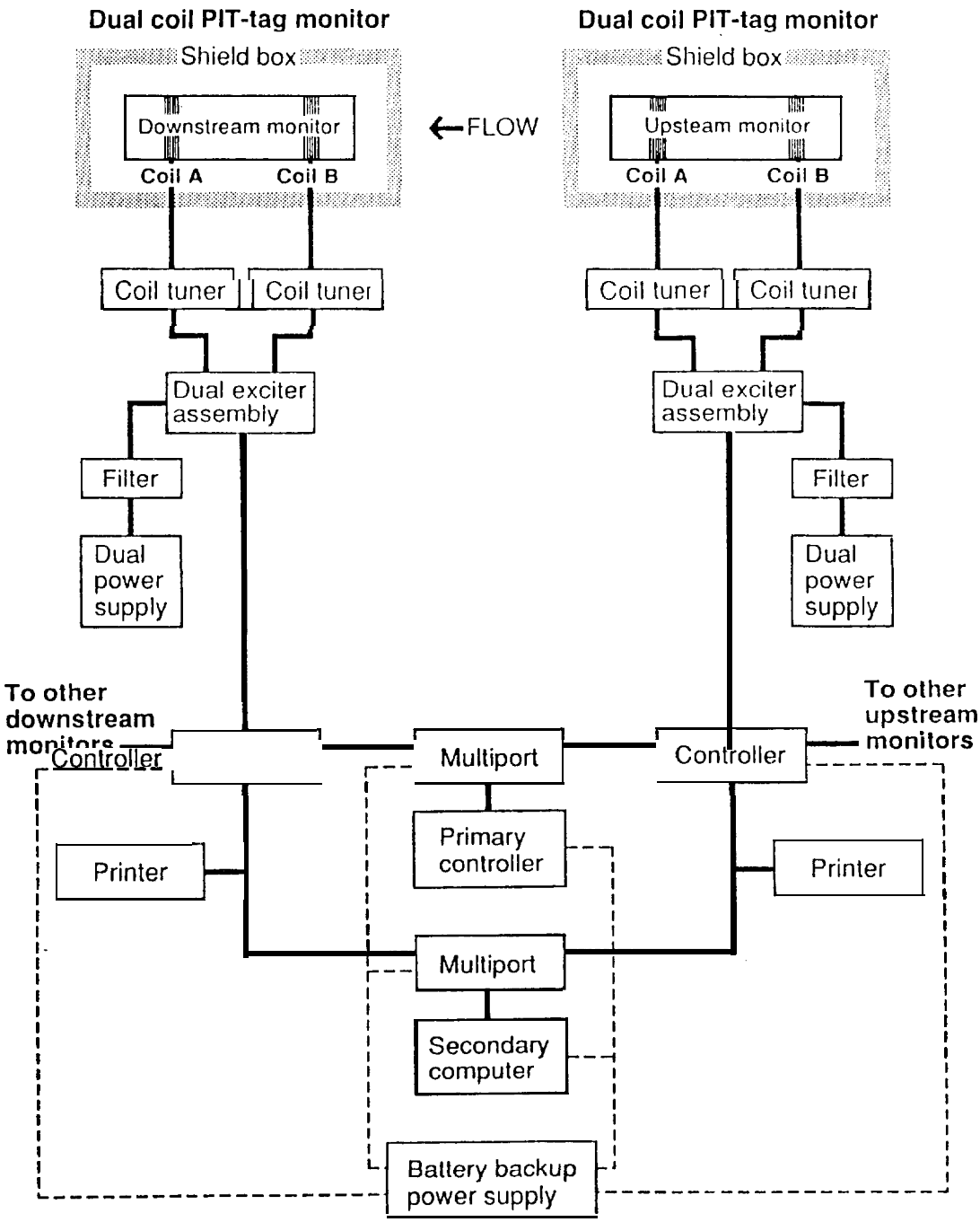

Figure 1. Generalized description of a section (two dual-coil monitors and associated equipment) of a typical PIT-tag interogation system used at Columbia River Basin dams, 1993.

insert different firmware chips, which determine how the tag codes are read or processed, into the controller. Single-read firmware chips (i.e., software that processes the first complete alphanumeric code received from a tag) are presently used in PIT-tag monitors at the dams.

Each interrogation system is designed with redundant components to provide backup in case of failure (Fig. 1). For example, each dual-coil monitor has its own power supply via a dual exciter. The exciters are connected to separate controllers and printers. Each controller is on its own electrical circuit and is connected to two computers through a multiport. The power source for the computers also has a battery backup.

Electronic equipment required for the interrogation system (other than the coils, exciters, coil tuners, and power filters) is housed in an instrument building. The building is equipped with heating and air conditioning to provide a stable temperature for the equipment. Power to the instrument building is supplied through a 15-kW power conditioner.

When PIT-tagged fish are electronically interrogated, they can be mechanically separated by slide gates that direct them either into special holding areas or back into the river. This separation is accomplished without handling the fish, and the time, date, and location of individual fish are recorded as they pass through a juvenile collection facility. If tagged juvenile fish are returned to the river (e.g., below Lower Granite Dam), they can be subsequently reinterrogated at downstream PIT-tag interrogation systems.

Presently, separation systems distinguish PIT-tagged from

non-PIT-tagged fish based on the presence or absence of PIT tags. When the PIT-tag monitor detects a tag, the controller activates a trigger mechanism to open the slide gate and divert the tagged fish. Although the exact configurations of the separation systems differ at each dam because of unique site requirements, the general approach is the same. Two parallel PIT-tag separation subsystems are located on the two exit flumes downstream from the fish and debris separator. In each subsystem, a slide-gate assembly is located downstream from dual-coil PIT-tag monitors. During normal operation, when a PIT-tagged fish is read at a coil, a slide gate opens to direct the PIT-tagged fish into another flume that leads to a fish-holding tank. While PIT-tagged and incidental untagged fish move to this holding area, they are counted using a series of Smith-Root' electronic fish counters and are reinterrogated for the presence of PIT tags by more monitors. Separated fish can then be returned to the river or loaded onto trucks or barges.

Each slide-gate assembly is controlled by custom-made electronics (the trigger mechanism) that are activated by the controllers when a PIT-tagged fish is detected. The trigger mechanism controls the rate of opening and closing, and the amount of time the slide gate remains open. The movement of the slide gate is controlled by a pneumatic piston. The various timing functions of the slide gate are set according to the velocity of water flowing through the flumes (2 to 4 m/sec). Electronic schematics and technical drawings of a slide-gate assembly are available from NMFS (Northwest Fisheries Science Center, 2725 Montlake Blvd. E., Seattle, WA 98112-2097).

---

[1] Reference to trade names does not imply endorsement by the National Marine Fisheries Service, NOAA.

Biological and mechanical evaluation of the separation system is discussed in detail by Matthews et al. (1990 and 1992) and Achord et al. (1992). Results from their tests showed that modifications made over the years were effective in: **1)** reducing injuries to fish, 2) increasing separation efficiency, and 3) increasing operational reliability of the slide-gate assemblies. Slide gates were shown to be more efficient at separating tagged from untagged fish when fewer fish were present. For instance, the separation ratio (number of untagged fish diverted per diverted PIT-tagged fish) varied from 0.7 to 2.5 as the number of fish passing through an exit flume increased from < 5,000 to 15,000 fish per hour (Matthews et al. 1990).

Modification or Installation of Interrogation and Separation Systems

In the Columbia River Basin, modifications and installation of PIT-tag interrogation and separation systems continued during 1990-1993. The projects varied in scope, complexity, and purpose. A brief description of the projects at each dam follows.

Bonneville Dam

Bonneville Dam (Fig. 2) is located on the Columbia River approximately 61 km east of Portland, Oregon. In 1989, numerous shortcomings were identified with the juvenile fish collection and handling facilities at both the Bonneville First and Second Powerhouses (Prentice et al. 1993). In light of these shortcomings, new sampling and fish interrogation facilities are being designed by the U.S. Army Corps of Engineers (COE). The new facilities will be multipurpose in design and will include PIT-tag interrogation and separation systems. A contract was issued by COE to a private engineering firm in 1989 to develop several concepts for construction of these new facilities. In 1990, preliminary drawings and concepts were presented to the fishery agencies for review. At that time, the agencies provided additional guidelines to the contractor. In 1991, the engineering firm submitted final concept drawings that addressed the specific problems raised by the fishery agencies. Presently, BPA and COE are working on construction drawings, project scheduling, and funding.

McNary Dam

McNary Dam (Fig. 2) is located on the Columbia River near Umatilla, Oregon. The COE and Pacific States Marine Fisheries Commission (PSMFC) are working with NMFS to design, fabricate, and

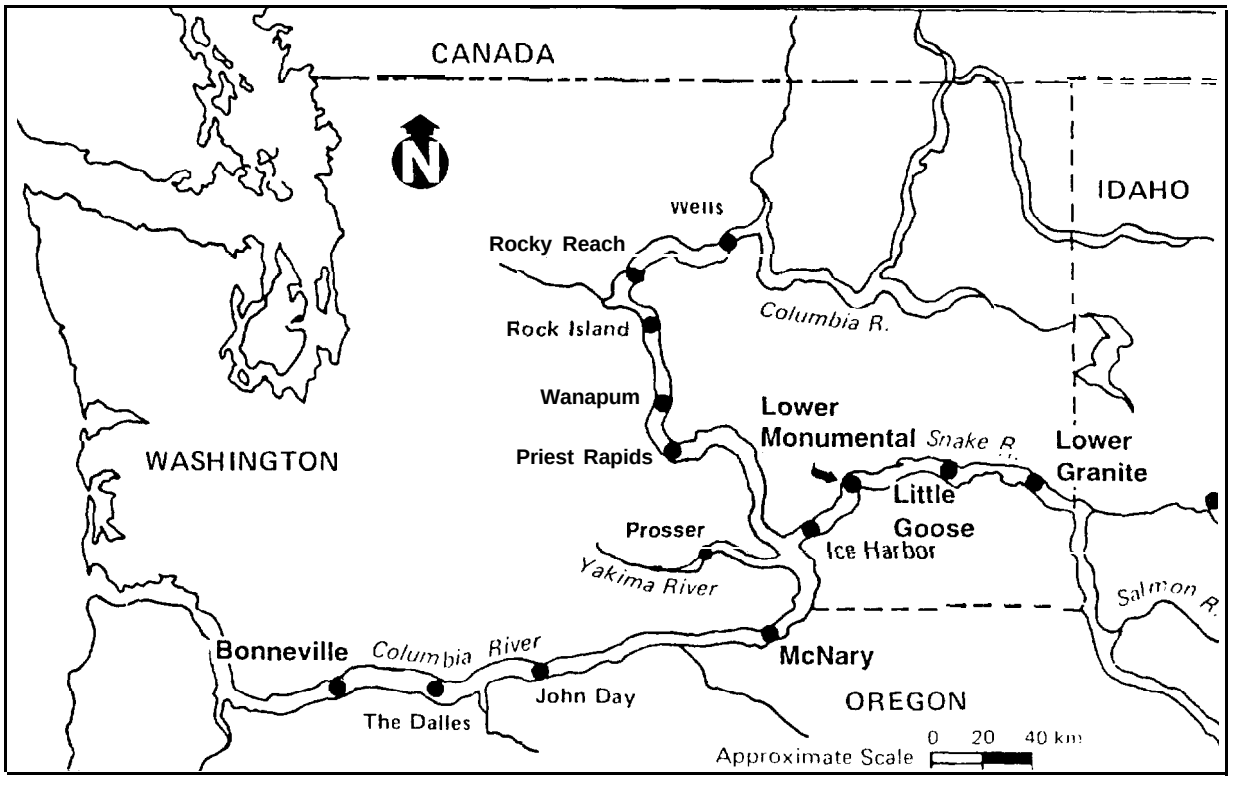

Figure 2. Major hydroelectric facilities within the Columbia River Basin.

install PIT-tag interrogation and separation systems at the new juvenile fish collection facility at McNary Dam (Fig. 3). The basic facility, which includes slide gates, will be built by COE. The PSMFC will install the PIT-tag interrogation system and the electronics for the separation system. Personnel from NMFS will act as advisors to PSMFC staff and will assist with installation of the new system. The new facility is scheduled to be completed by spring 1994.

Lower Monumental Dam

Lower Monumental Dam (Fig. 2) is located on the Snake River approximately 60 km upstream from Pasco, Washington. Construction of a new juvenile fish collection facility, which will include PIT-tag interrogation and separation systems, was started in 1992. The new collection facility was scheduled to be completed in early 1993 by COE (Fig. 4). However, the facility was not completed on time; therefore, NMFS installed a temporary PIT-tag interrogation system in spring 1993. Installation of permanent PIT-tag interrogation and separation systems is now scheduled to be completed prior to the 1994 field season.

Little Goose Dam

Little Goose Dam (Fig. 2) is located on the Snake River approximately 90 km downstream from Clarkston, Washington. A new juvenile fish collection facility became functional at Little Goose Dam in 1990. The electronic equipment required for the PIT-tag interrogation system at the dam came primarily from the old juvenile fish collection facility (Prentice et al. 1990a). Some additional equipment was needed to meet the requirements of the new facility. Several modifications have been made to this facility since it **was**

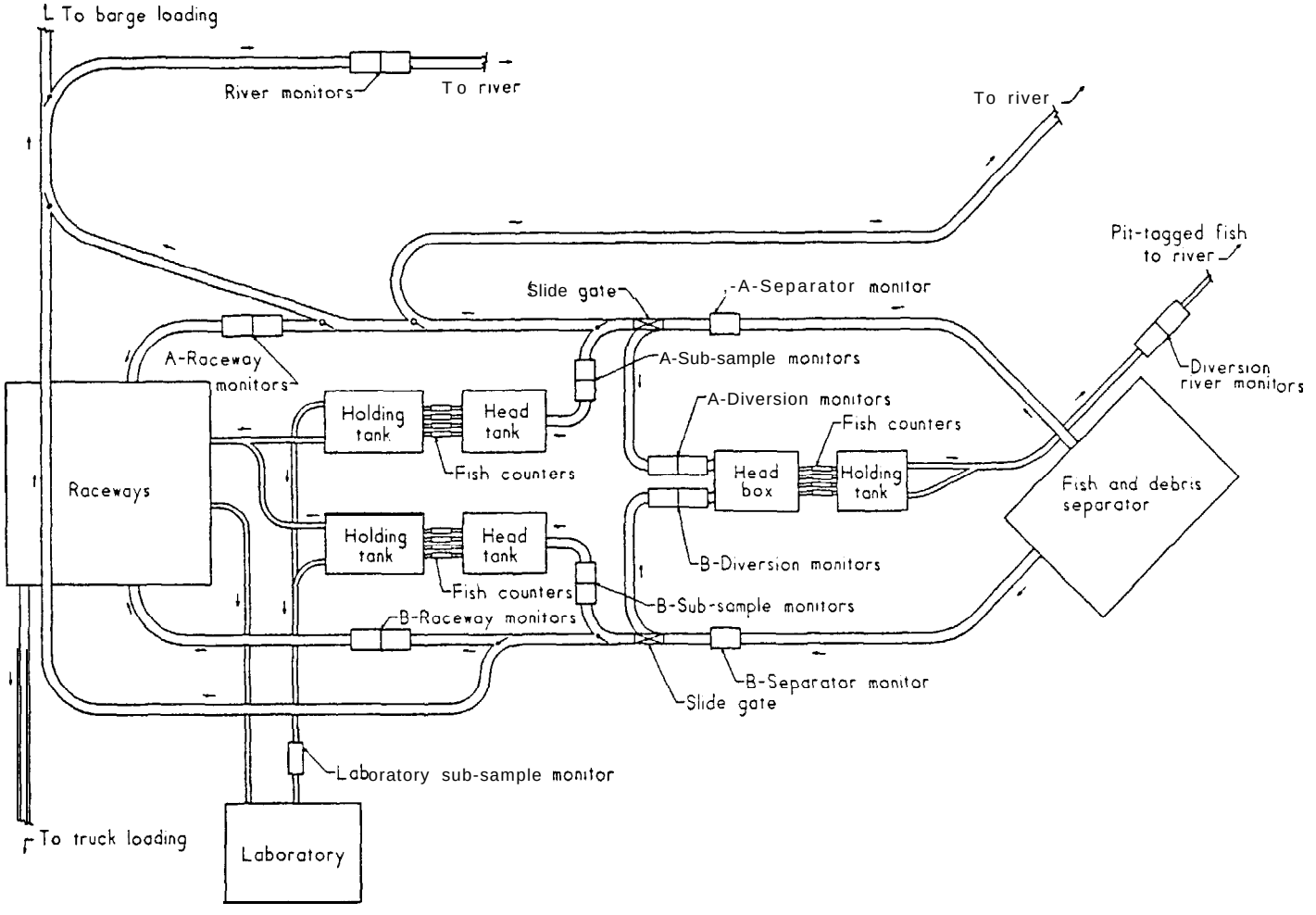

Figure 3 PIT-tag interrogation and separation systems for juvenile salmon at McNary Dam, 1993.

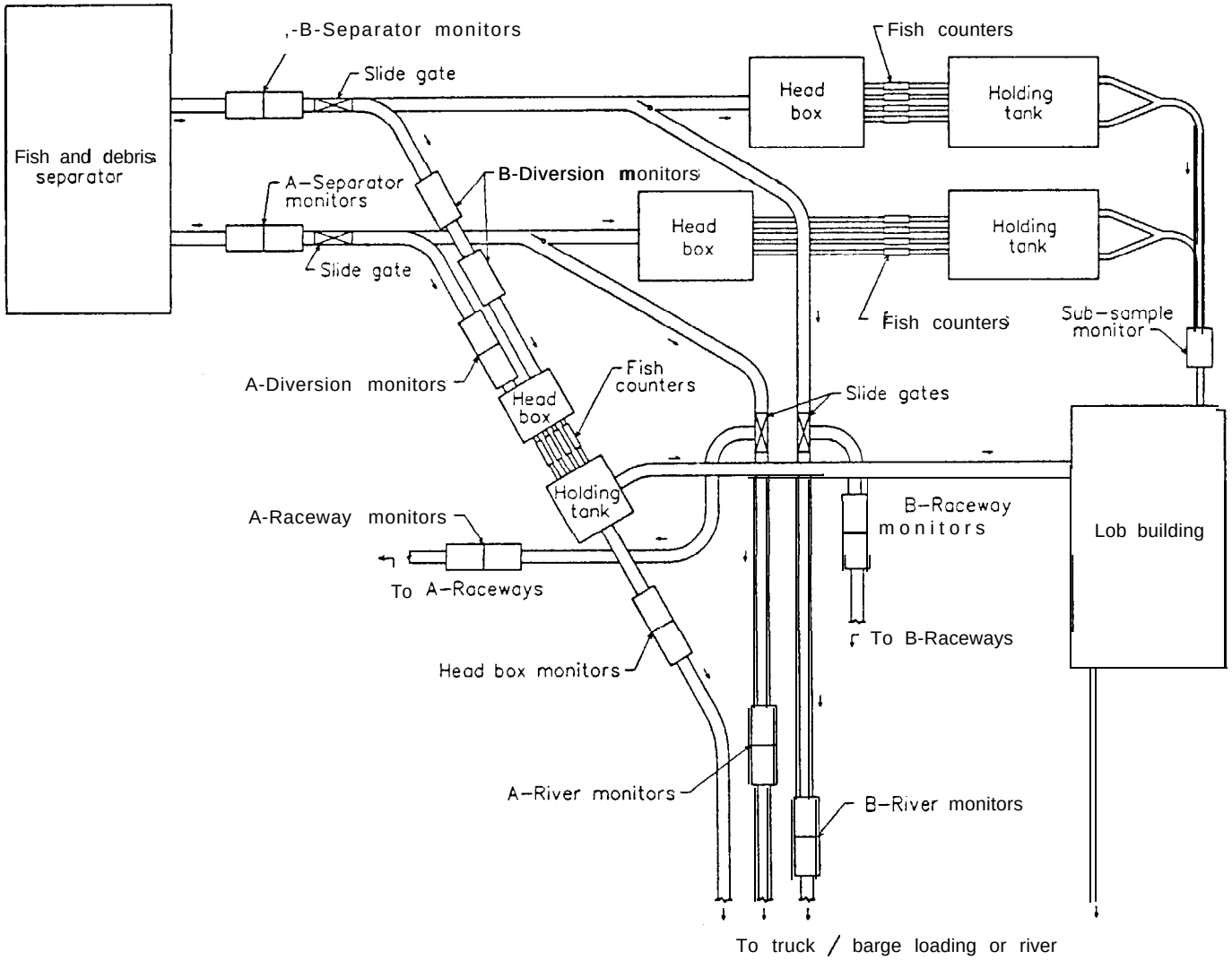

Figure 4. PIT-tag interrogation and separation systems for juvenile salmon at Lower Monumental Dam, 1993.

constructed in 1990, including the addition of a PIT-tag separation system in 1991 (Fig. 5).

Lower Granite Dam

Lower Granite Dam (Fig. 2) is located on the Snake River approximately 54 km downstream from Clarkston, Washington. The original- separation system was installed at Lower Granite Dam in 1989 (Prentice et al. 1993). The system was modified in 1990, 1992, and 1993 to improve operating efficiency and reliability. At this dam, the separation system is more complicated than the general system described above because there are two slide-gate assemblies within each separation subsystem (Fig. 6). The two slide-gate assemblies are used not only to separate tagged and untagged fish, but also for taking hourly subsamples used to estimate species composition, raceway holding densities, and fish condition. To take subsamples, the top slide gates are opened for a prescribed period of time. During this time, all fish (tagged and untagged) are dropped into secondary flumes beneath the exit flumes, where they are directed into fish subsample holding tanks. During non-sampling times when PIT-tagged fish are read, slide gates in these second flumes also open and the fish are directed to a fish holding tank or back to the river.

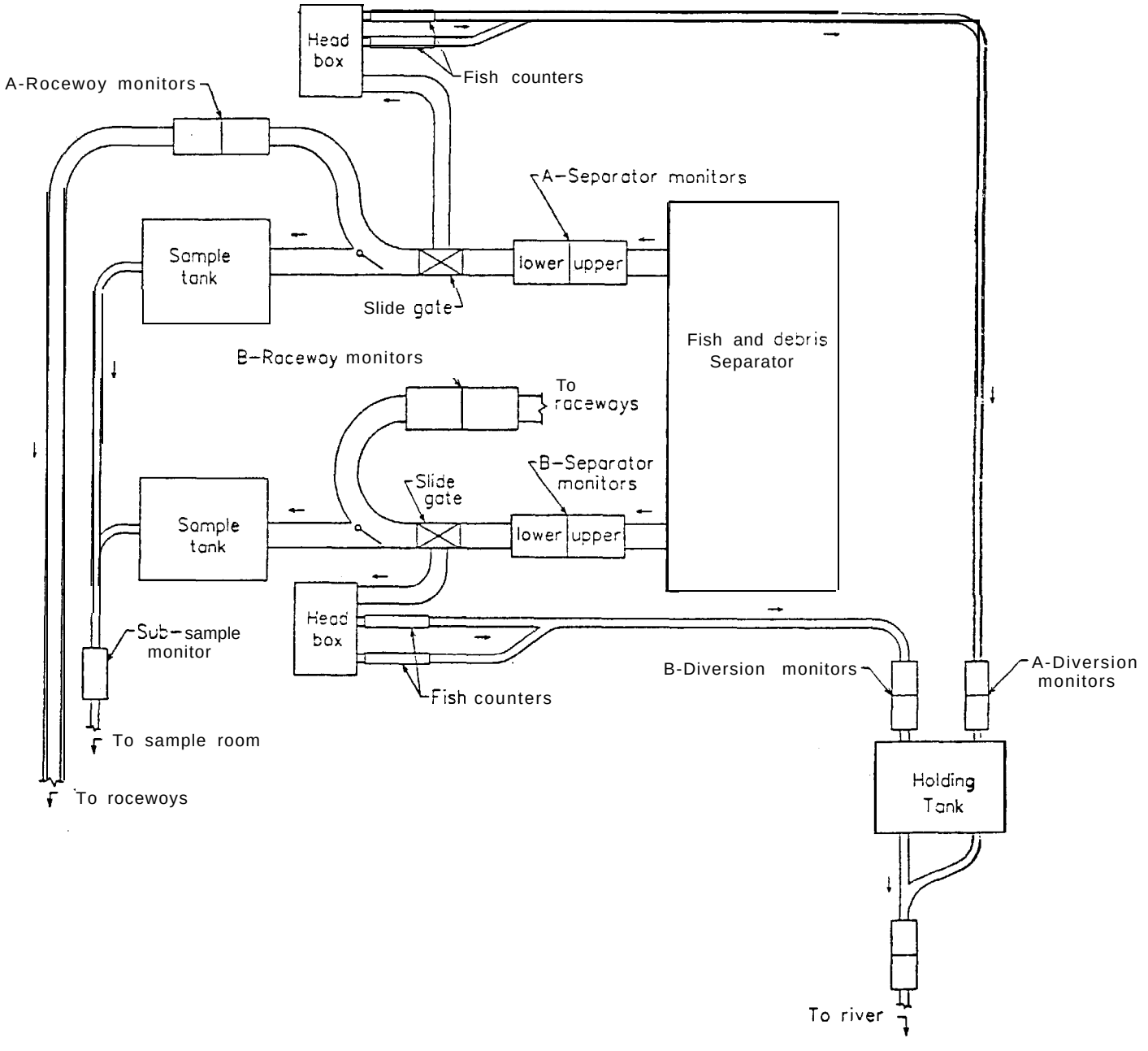

Figure 5 PIT-tag interrogation and separation systems for juvenile salmon at Little Goose Dam, 1993.

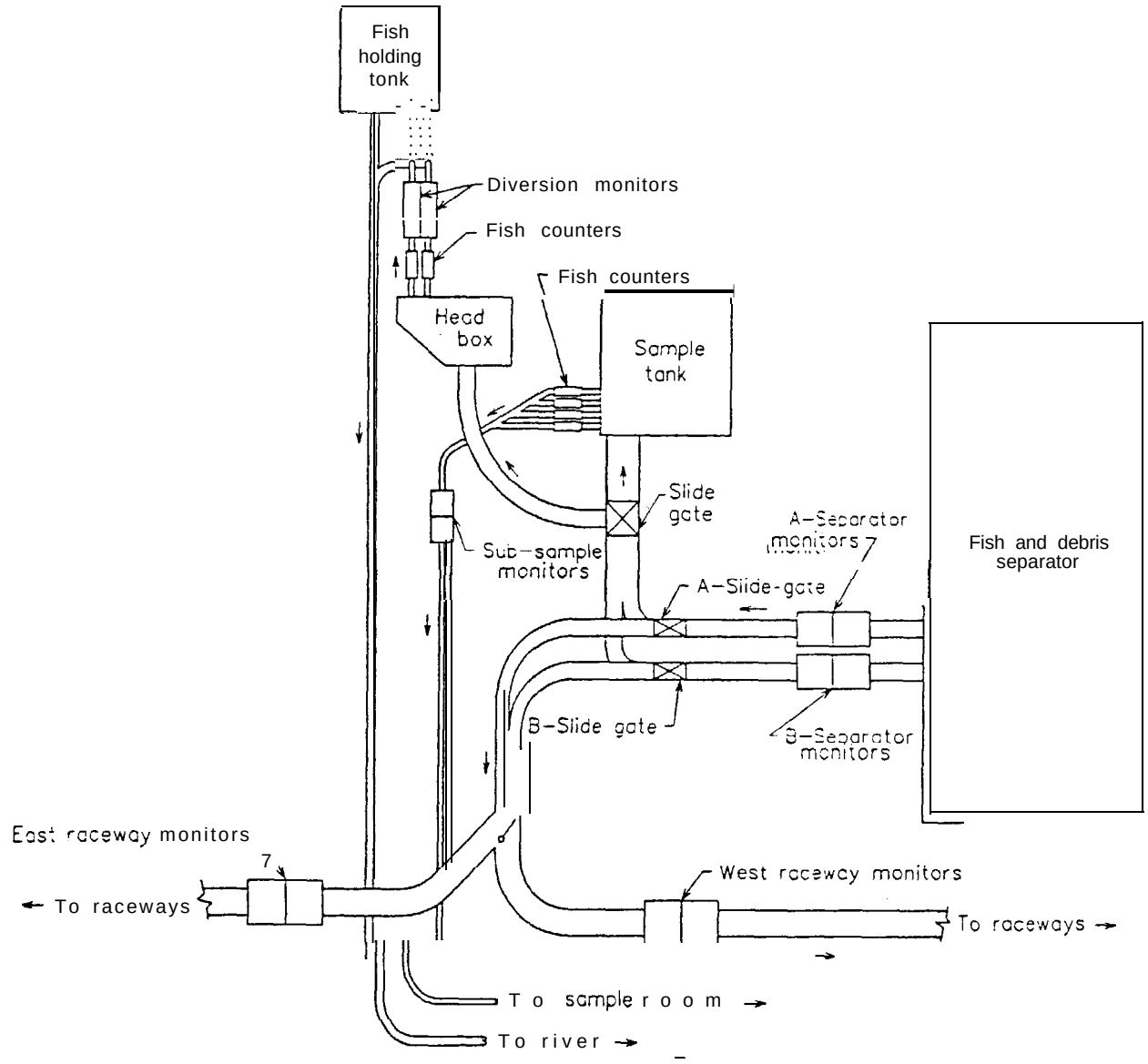

Figure 6. PIT-tag interrogation and separation systems for juvenile salmon at Lower Granite Dam, 1993.

Summary, Conclusions, and Recommendations

Bonneville Dam

1. Fishery agencies have identified shortcomings at the collection and handling facilities for juvenile fish at Bonneville Dam. In light of these shortcomings, new sampling and fish interrogation facilities are being designed.
2. A COE contract was issued to an engineering firm in 1989 to develop several concepts for construction of new sampling and interrogation facilities at each of the two powerhouses. After several reviews by fishery agencies, concept drawings were completed in 1991.
3. Presently, BPA and COE are working on construction drawings, project scheduling, and funding for these new facilities.

McNary Dam

1. A juvenile fish collection facility, which will include PIT-tag interrogation and separation systems, is being built at McNary Dam. The facility is scheduled for completion in spring 1994.
2. The lead agency for the installation of the PIT-tag equipment at the dam will be PSMFC.

Lower Monumental Dam

1. A new juvenile fish collection facility, which will include PIT-tag interrogation and separation systems, was started by COE at Lower Monumental Dam in 1992. Contracting and construction delays prevented it from being completed on time.
2. A temporary PIT-tag interrogation system was installed at the dam for the 1993 field season. Permanent PIT-tag interrogation and

separation systems are scheduled to be operational by spring 1994.

Little Goose Dam

1. A new juvenile fish collection facility was constructed by COE at Little Goose Dam during 1989-90.
2. Updated PIT-tag interrogation and separation equipment was installed in 1993.

Lower Granite Dam

1. The separation system at Lower Granite Dam was modified in 1990, 1992, and 1993 to increase separation efficiency and reliability.
2. The separation system is also used by COE for their hourly fish subsamples.
3. We recommend that NMFS, COE, and PSMFC personnel become familiar with the operation and maintenance of interrogation and separation systems at all of the dams in order to make adjustments and repairs during the field season.

Evaluation of the PIT-tag Interrogation System for Juvenile Salmon at Little Goose Dam: Tag-Reading Efficiency

Introduction

Reading efficiency (RE) of a PIT-tag interrogation system (RE for all of the coils combined) is determined by releasing a known number of tagged juvenile salmon directly into the fish and debris separator. Tag-reading efficiencies are then calculated by comparing the number of fish released to the number recorded by the interrogation system. Exact reading efficiencies can be calculated for the entire interrogation system, but only approximated for each coil or for a dual-coil monitor (because which separation subsystem missed the fish is unknown). This method of determining system RE has been used since 1985 (Prentice et al. 1987 and 1993). To be considered operating efficiently, the interrogation system must meet the 95% RE criterion established by NMFS for Columbia River Basin dams (Prentice et al. 1993). The interrogation system at Little Goose Dam was evaluated with this direct method using two salmonid species in 1991.

Materials and Methods

Outmigrating juvenile chinook salmon (*Oncorhynchus tshawytscha*) and steelhead (0. *mykiss*) were removed directly from the fish and debris separator in May 1991. Only fish having limited scale loss and no previous marks, tags, or injuries were used. Selected fish were PIT tagged using the method described by Prentice et al. (1990b). For both species, 10 release groups of 50 to 55 fish were tagged and their fork lengths measured to the nearest millimeter using the Columbia River Basin protocol (Pacific States Marine Fisheries Commission 1993). After tagging, each release group was held in a covered 132-L portable container with a continuous supply of aerated river water.

The fish were held for 24 hours and then released directly into the upwell of the fish and debris separator. Prior to release, each group was examined to record any mortalities and to ensure tags were active in the released fish. Groups were released at 30-minute intervals until all were placed into the fish and debris separator.

All of the fish were allowed to pass volitionally through the fish and debris separator. As fish exited the fish and debris separator, they traveled down either of two parallel flume systems (designated A and B in Fig. 5) and were immediately interrogated for tag presence by two dual-coil PIT-tag separator monitors. The raceway and diversion PIT-tag monitors depicted in Figure 5 were not present in 1991. Upon detection of a PIT-tagged fish at any of the four coils, the tag code, coil identification number, time (day, hour, minute, and second), and date (month, day, and year) were recorded in a computer file and simutaneously printed, as described by Prentice et al. (1990a).

Results and Discussion

Both species sustained higher than normal mortality rates from tagging (Table 1). The mortality rates observed in this study for chinook salmon and steelhead were 9.6 and 3.3%, respectively, compared to the normal post-tagging mortality rate of less than 2% (Prentice et al. 1993). These were the highest mortality rates ever observed while PIT tagging fish (through July 1993). No explanation related to our methods can be offered for this high mortality because the fish-handling and tagging techniques were similar to those used in previous years.

Reading efficiencies for the entire interrogation system (potentially four coils for each fish) were 96.5% for chinook salmon

Table 1. Tagging and recovery data for PIT-tagged chinook salmon and steelhead juveniles released at Little Goose Dam in 1991.

	Chinook salmon	Steelhead
No. tagged	502	506
No. mortalities	48	17
Percent mortality	9.6	3.3
No. released	454	489
No. tags read	438	463

and 94.7% for steelhead (Table 2). These are equal to or above the established 95% acceptable rate (Prentice et al. 1993), indicating the dam's interrogation system was operating efficiently. However, when reading efficiencies were calculated for each dual-coil PIT-tag monitor, they ranged from 82.5 to 97.5% for chinook salmon and from 84.8 to 97.6% for steelhead. The lowest reading efficiencies were registered by the separator monitor on the B-exit flume closest to the fish and debris separator. They were probably caused by a combination of the high number of fish traveling through the B-exit flume and poor orientation of the fish. Tags are not read when two or more fish move through a coil simultaneously or when PIT-tagged fish are at an angle greater than a 45° relative to the tag-energizing field. The separator monitors are located immediately below the exit to the fish and debris separator, where water turbulence can be high. This turbulence can cause fish to be tossed sideways and result in PIT-tag angles exceeding 45°.

Table 2. For the PIT-tagged chinook salmon and steelhead juveniles released at Little Goose Dam in 1991, the estimated reading efficiencies for the four dual coil PIT-tag monitors and the overall reading efficiency for the interrogation system. See Figure 5 for location of separator monitors.

	Chinook salmon		Steelhead	
	No. read	Percent	No. read	Percent
Separator monitor (upper A)	115	97.5	40	97.6
Separator monitor (lower A)	113	95.8	38	92.7
Separator monitor (upper B)	264	82.5	358	84.8
Separator monitor (lower B)	312	97.5	386	91.5
Interrogation system	438	96.5	463	94.7

Summary, Conclusions, and Recommendations

1. The PIT-tag interrogation system for juvenile salmon at Little Goose Dam was evaluated in 1991. A known number of PIT-tagged juvenile steelhead and chinook salmon were released directly into the fish and debris separator to determine the RE of the PIT-tag interrogation system for each species. To be considered operating efficiently, an interrogation system must meet the 95% RE criterion established by NMFS for Columbia River Basin dams.
2. Compared to the normal mortality rate of less than 2%, both chinook salmon and steelhead sustained higher than normal mortality rates after tagging. Mortality rates for chinook salmon and steelhead were 9.6% and 3.3%, respectively.
3. When the number of tagged fish detected was compared to the number of tagged fish released, the reading efficiencies of the PIT-tag interrogation system were 96.5% and 94.7% for chinook salmon and steelhead, respectively.
4. One of the four coils had reading efficiencies less than 85%, probably because of the large number of fish that went through it and because turbulence caused fish to have poor orientation relative to the tag-energizing field. To reduce the turbulence effect and thereby improve the RE of this monitor, we recommend positioning the monitor farther away from the fish and debris separator.

Evaluation of the PIT-tag Interrogation System for Adult Salmon at Lower Granite Dam: Tag-Reading Efficiency

Introduction

In 1986, the PIT-tag interrogation system for adult salmon was installed in the fish ladder at Lower Granite Dam (Fig. 7). All adult salmonids migrating upstream through the fish ladder pass through both CW-tag detectors and PIT-tag monitors. The interrogation system has been routinely evaluated for RE using pass-through reference tags (10 PIT tags embedded in wooden blocks and floated through the interrogation system), but in 1989 and 1990, evaluations were conducted for the first time using fish.

Materials and Methods

Adult separator/trap complex--Fish reached the CW-tag detectors and PIT-tag monitors through two false weirs, one on each side of the fish ladder (Fig. 7). After passing over a false weir, fish traveled down a 31-cm diameter pipe, through a CW-tag detector, and then through two PIT-tag monitors (31-cm diameter by 122-cm long; cross-sectional area = 750 cm"). If a CW tag was detected, a diversion swing gate located downstream from the PIT-tag monitors was activated, and the diverted fish was directed to an adult fish trap. If no CW tag was detected, the fish was returned to the main fish ladder to continue its upstream migration. Therefore, under normal operation, PIT-tagged fish would not be separated into the trap, but returned to the main fish ladder, while CW+PIT-tagged fish would be separated into the adult trap.

Evaluation--Returning adult steelhead (age-2-ocean "B" run), which had been CW tagged and freeze branded as juveniles, were captured in the adult fish trap at Lower Granite Dam. Two groups of

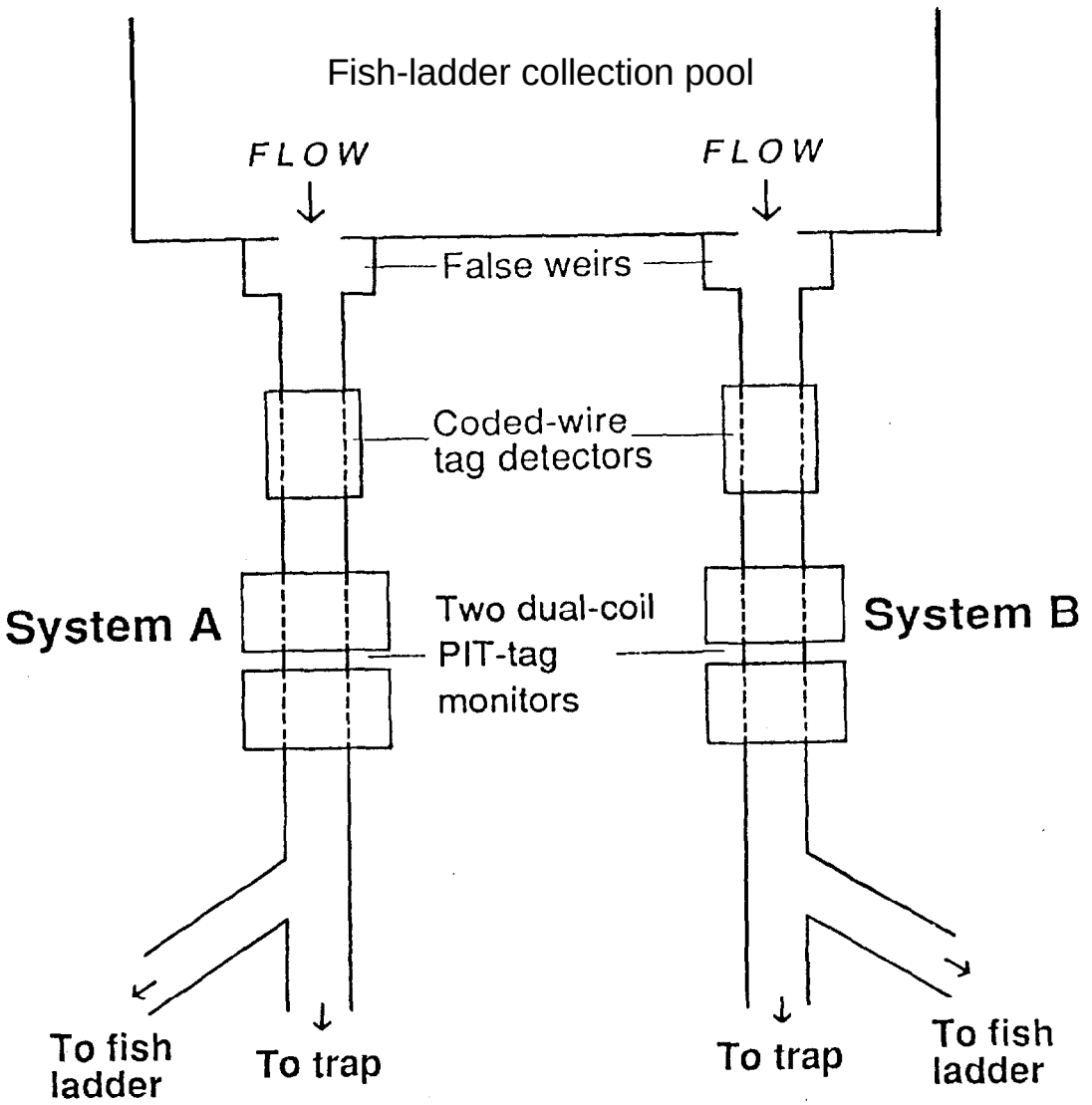

Figure 7. Separator/trap complex for adult salmon at Lower Granite Dam, 1993.

10 fish were used in the test. The fish were PIT tagged according to the procedure described by Prentice et al. (1990b). After tagging, each adult steelhead was interrogated using a hand-held PIT-tag scanner to confirm that the PIT tag was functioning. Electrical strap ties implanted with a second CW tag were used as jaw tags (McCutcheon et al. 1994). This double CW-tag procedure was followed to try to ensure activation of the CW-tag diversion system and to enable biologists to visually identify test fish in the trap. Tagged fish were allowed to recover for 10 minutes before being released into the fish ladder downstream from the adult separator/trap complex. The first group was PIT tagged and released during November 1989 while the second group was tagged and released during March 1990 (Table 3). Fork length, gender, PIT-tag code, date, and release time were recorded for each fish.

Released adult steelhead were allowed to migrate up the fish ladder volitionally and then were directed through the adult separator/trap complex. When a PIT-tagged fish was read by any of the four excitation/detection coils, the date, time, and coil identification number were recorded by the computer. Each jaw-tagged fish recovered in the adult fish trap was interrogated with a hand-held PIT-tag scanner to verify its tag code before the jaw tag was removed. The fish was then released into the fish ladder to continue its migration upstream.

Results and Discussion

Fork lengths of the adult steelhead released ranged from 77 to 86 cm (Table 3). Recapture time ranged from 2 hours to 4 months (Table 4). No relationship seemed to exist between fish size or gender and recapture time. Several fish released in the fall

Table 3. Tagging and release data for PIT-tagged adult steelhead released below the fish ladder in 1989 and 1990 at Lower Granite Dam.

	PIT-tag code	Tagging date	Release time	Water temp. (°C)	Gender	Length (cm)
1	7F7F096A0C	11/15/89	13:10	10.0	F	81
2	7F7F096C72	11/16/89	15:40	10.0	F	83
3	7F7F09606A	11/17/89	15:oo	10.0	F	a2
4	7F7F09635C	11/18/89	09:30	10.0	M	85
5	7F7F095D4C	11/18/89	10:00	10.0	M	a5
6	7F7F095D15	11/19/89	09:45	10.0	F	86
7	7F7F095F70	11/19/89	13:oo	10.0	F	80
8	7F7F096865	11/20/89	15:00	10.0	F	79
9	7F7F095D44	11/20/89	15:oo	10.0	F	79
10	7F7F09655B	11/23/89	09:45	9.4	M	86
11	7F7F0A7A57	03/18/90	16:30	6.1	F	81
12	7F7F095D43	03/19/90	09:30	6.6	F	84
13	7F7F096A59	03/20/90	13:00	6.6	M	84
14	7F7F0A757B	03/20/90	14:15	6.6	F	81
15	7F7F0A7D5F	03/21/90	10:15	7.2	F	78
16	7F7F096B00	03/24/90	15:oo	a.3	F	77
17	7F7FA73322	03/23/90	14:oo	7.7	F	86
18	7F7F095B1A	03/25/90	13:15	8.3	F	81
19	7F7F095D2D	03/25/90	15:30	a.3	F	a5
20	7F7F0A781A	03/26/90	11:15	8.3	F	a2

Table 4. Recovery data for PIT-tagged adult steelhead released below the fish ladder in 1989 and 1990 at Lower Granite Dam.

	PIT-tag code	Recovery date	Recovery time	Water temp.(°C)	No.of coils	Elapsed time(days)
1	7F7F096A0C	11/17/89	12:54	10.0	3	2.0
2	7F7F096C72	11/23/89	14:53	9.4	4	7.0
3	7F7F09606A	11/21/89	10:46	10.0	3	3.8
4	7F7F09635C	11/24/89	09:07	8.8	4	6.0
5	7F7F095D4C	03/06/90	16:45	5.5	4	108.3
6	7F7F095D15	11/19/89	12:05	10.0	4	0.1
7	7F7F095F70	03/16/90	15:05	6.6	3	117.1
8	7F7F096865	11/22/89	09:48	10.0	3	1.8
9	7F7F095D44	03/22/90	16:57	7.7	4	122.1
10	7F7F09655B	11/24/89	23:06	a.8	4	1.6
11	7F7F0A7A57	03/21/90	15:13	10.0	1	3.0
12	7F7F095D43	03/20/90	17:08	6.6	4	1.3
13	7F7F096A59	03/22/90	12:57	7.7	4	2.0
14	7F7F0A757B	03/20/90	16:30	6.6	4	0.1
15	7F7F0A7D5F	03/21/90	14:15	7.2	1	0.2
16	7F7F096B00	03/25/90	17:32	8.3	4	1.1
17	7F7FA73322	03/24/90	09:15	8.3	4	0.8
la	7F7F095B1A	03/26/90	01:30	8.3	4	0.5
19	7F7F095D2D	03/25/90	17:15	8.3	1	0.1
20	7F7F0A781A	03/27/90	14:30	a.3	4	1.2

overwintered in the Lower Granite Dam region of the Snake River. This behavior is commonly observed in Snake River steelhead (Jerrel Harmon, National Marine Fisheries Service, stationed at Lower Granite Dam, Washington, Pers. commun. November 1989).

All 20 steelhead tagged in this study swam up the fish ladder, and all of their PIT tags were read by at least one of the PIT-tag monitors: 13 fish were read by all 4 coils, 4 fish by 3 coils, and 3 fish by 1 coil (Table 4). Therefore, the overall system RE was 100%. The single-coil reads occurred between 21 March and 25 March 1990. A test using pass-through reference tags was run on 22 March 1990, and all of the coils performed perfectly (i.e., all 10 reference tags were read by each coil). In addition, four other fish passing through the system during the same period were read by all four coils. One possible explanation for the single-coil reads could be that migrating fish splashed water within the PIT-tag monitors: this would have severely reduced the tag-energizing field. Unlike the PIT-tag interrogation system, not all fish were detected by the CW-detectors: two fish were missed, resulting in a detection rate of 90%.

The PIT-tag interrogation system at Lower Granite Dam was an effective interrogator of adult steelhead in this study. However, we suggest further testing on a range of species and age classes to eliminate the possible effect of fish behavior and size on the interrogation system.

Summary, Conclusions, and Recommendations

1. The PIT-tag interrogation system for adult salmon at Lower Granite Dam was evaluated in 1989 and 1990. Trapped adult steelhead were PIT tagged and jaw tagged with CW tags. They were then released at the bottom of the fish ladder and allowed to migrate volitionally.
2. All of the fish migrated up the fish ladder and their PIT tags were read by the PIT-tag monitors: 13 fish were read by all 4 coils, 4 fish by 3 coils, and 3 fish by 1 coil. Overall RE was 100%.
3. Not all fish were detected by the CW-detectors; two fish were missed, resulting in a detection rate of 90%.
4. The PIT-tag interrogation system at Lower Granite Dam is an effective interrogator of adult steelhead. However, we recommend further testing on a range of species and age classes to eliminate the possible effect of fish behavior and size on system interrogation ability.

SYSTEMS DEVELOPMENT AND EVALUATION

In 1989, NMFS began development of a new class of PIT-tag monitors to passively interrogate juvenile fish with minimal interference to their movements within streams or to their volitional exit from hatcheries. Such monitors would allow investigators to examine the migration patterns and instream dynamics of salmonid parr and smolts, even in inaccessable areas.

Since some salmonids can detect EMFs (Quinn et al. 1981, Quinn and Groot 1983), it is possible that their instream behavior might be affected by the 400-kHz EMFs produced by PIT-tag monitors. Therefore, the first study on developing the monitors in 1989 examined how the geometric, electromagnetic, and light properties of passageways (the part of a PIT-tag monitor that the fish swim through) within PIT-tag monitors affected juvenile chinook salmon movement (Prentice et al. 1993). To summarize this 1989 study, 1) significantly more fish volitionally swam through a 10-cm wide rectangular channel than through tube-shaped passageways of the same diameter ($P < 0.001$), 2) the presence of an active EMF did not alter fish passage behavior in the white tube-shaped passageway of the PIT-tag monitor, and 3) light intensity below ambient levels delayed fish passage through test passageways.

The first three studies of this report sought to confirm and expand on the findings of the 1989 study, and thereby help to determine the best design of PIT-tag monitors for juvenile salmon.

PIT-tag Monitors for Juvenile Salmon: Comparing Fish Passage Time through Four Types of Passageways

Introduction

This study, conducted at the NMFS Big Beef Creek Field Facility (Seabeck, Washington), examined passage times through four types of passageways using juveniles from two salmonid species.

Materials and Methods

Test apparatus--Tests were conducted in an apparatus consisting of a central passageway connected to upstream and downstream compartments (155-cm long by 41-cm wide by 46-cm high) (Fig. 8). Four central passageways were tested: 1) a channel (159-cm long by 10-cm wide by 51-cm high), 2) a transparent acrylic tube, 3) an inactive PIT-tag monitor that is equivalent to a white tube, and 4) an active (400-kHz) PIT-tag monitor that is equivalent to a white tube with an EMF inside of it. All tubes were 10 cm in diameter by 159 cm in length. Light intensity inside the white tube of the monitor was noticeably lower than inside the channel or transparent tube. The compartment in which fish were initially held was closed off from the test passageway by a perforated gate. Flow rate through the apparatus was approximately 20 L/minute.

Testing procedure--Tests were initiated by placing four fish into the appropriate compartment and giving them 15 minutes to acclimate. During this acclimation period, an observer noted distinctive morphological characteristics, which were later used to differentiate among fish entering and exiting a test passageway. The gate was then raised to allow fish access to the test passageway. Times were recorded for the juveniles as they entered and exited the passageways. After 60 minutes, the gate was lowered, and the numbers of fish in the

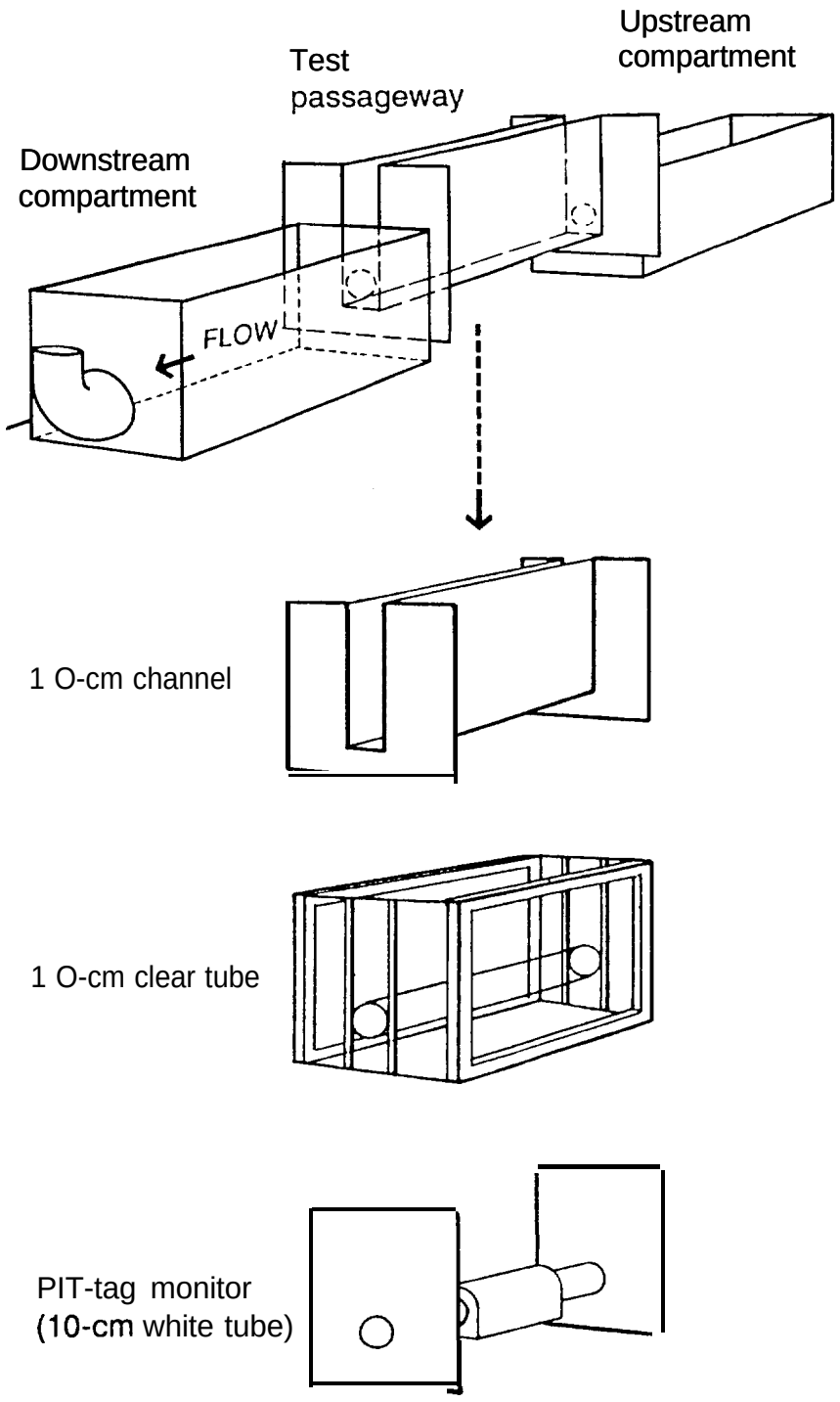

Figure 8. Test apparatus for evaluating fish passage time through four test passageways (an open channel, transparent tube, and inactive and active PIT-tag monitors).

upstream compartment, downstream compartment, and central test passageway were counted. On any given day, trials for all four passageways were conducted, but the order in which they were conducted (early morning, late morning, early afternoon, and late afternoon) was alternated to eliminate time of day as a confounding factor.

Test fish--Steelhead and chinook salmon were tested with the apparatus and procedure described above. At the start of testing, steelhead were placed into the downstream compartment, while chinook salmon were placed into the upstream compartment of the test apparatus. Between January and March 1990, 29 trials (116 fish) for each test passageway were conducted with 8- to g-month-old steelhead. The steelhead were obtained from the Washington State Department of Wildlife South Tacoma Hatchery. During June and July 1990, 20 trials (80 fish) for each passageway were conducted with ocean-type chinook salmon that were progeny from adults returning to Big Beef Creek during the fall of 1989.

Statistics--Entrance times, numbers of fish entering per trial, percentages of fish that entered and exited a test passageway, and the times to complete passage through the test passageways were compared with analyses of variance (ANOVAs) (Zar 1974). Student-Newman-Keul's (SNK) tests were used to determine groupings for significant ANOVAs. There was no variance associated with the percentage of chinook salmon exiting the transparent tube, and therefore, 95% confidence intervals were calculated to determine if the passageways were significantly different. Significance was established at $P \leq 0.05$.

Results

Steelhead--The behavior of steelhead suggested that they were in a migratory stage of development; however, not all of the 116 steelhead used in the 29 trials entered the different passageways. There were significant differences among the percentages of steelhead that entered the four passageways ($P < 0.01$) (Table 5). As indicated by the results of the SNK test, significantly more fish entered the channel (2.9 fish per trial) than the three types of tubes (1.8 to 2.0 fish per trial). Average entrance times ranged from 12.9 to 19.5 minutes and were not significantly different among the four passageways ($P = 0.23$) (Table 6).

There were significant differences among the percentages of steelhead that entered and exited the four passageways ($P = 0.01$) (Table 7). As indicated by the results of the SNK test, almost all of the fish entering the channel or transparent tube transited through them; however, a significant percentage of fish remained in the inactive or active PIT-tag monitor. Only steelhead completely transiting the passageways were included in the passage-time analysis; of these fish, the average passage times were significantly different ($P < 0.01$) (Table 8). The SNK test separated the average passage times into three groupings: 1) the transparent tube, 2) the channel, and 3) the inactive and active PIT-tag monitor. Fish swam rapidly through the transparent tube, averaging only 1.9 minutes, while they averaged **20.8** and 21.1 minutes through the inactive and active PIT-tag monitor, respectively.

Chinook salmon--The chinook salmon used in this study appeared healthy but unresponsive, as few of them entered the test passageways; therefore, the following results can only be suggestive. Since fewer

Table 5. Number of steelhead tested per trial and the average number entering the four test passageways. Probability value is based on a one-way ANOVA with groupings distinguished by SNK analysis.

	Channel	Transparent tube	Inactive monitor	Active monitor
Number of fish/trial	4	4	4	4
Number of fish entering/trial				
Mean	2.9	1.8	2.0	1.9
SD	(1.0)	(1.0)	(1.4)	(1.3)

$F(3, 112) = 5.85$ $P < 0.01$

Groupings:	Channel	Transparent	Inactive	Active

Table 6. Overall number of steelhead entering each test passageway and their mean entrance times. Probability value is based on a one-way ANOVA.

	Channel	Transparent tube	Inactive monitor	Active monitor
Number of fish entering	85	52	58	54
Entrance times in minutes				
Mean	19.5	12.9	17.4	17.2
SD	(17.3)	(18.8)	(18.0)	(18.9)

$F(3, 245) = 1.46$ $P = 0.23$

Table 7. Overall number and percentage of steelhead exiting each test passageway. Probability value is based on a one-way ANOVA with groupings distinguished by SNK analysis.

	Channel	Transparent tube	Inactive monitor	Active monitor
Number of fish exiting	82	51	26	28
Percentage of fish exiting				
Mean	96.7	96.1	36.8	45.0
SD	(9.7)	(19.6)	(36.9)	(42.6)

$F(3, 99) = 30.97$ $P = 0.01$

Groupings: Channel Transparent Inactive Active

Table 8. Overall number of steelhead exiting each test passageway and their mean passage times through the four test passageways. Probability value is based on a one-way ANOVA with groupings distinguished by SNK analysis.

	Channel	Transparent tube	Inactive monitor	Active monitor
Number of fish exiting	82	51	26	28
Passage time in minutes				
Mean	10.9	1.9	20.8	21.1
SD	(14.2)	(7.6)	(14.5)	(16.4)

$F(3, 183) = 18.13$ $P < 0.01$

Groupings:	Channel	Transparent	Inactive	Active

than one out of four salmon entered a passageway per trial, it is not surprising that there was no significant difference in the number of fish per trial that entered the test passageways (P = 0.41) (Table 9). Average entrance times ranged from 15.0 to 24.6 minutes and were not significantly different among the four passageways (P = 0.67) (Table 10).

There was no variance connected with exit from the transparent tube, because all (100%) of the chinook salmon that entered the transparent tube also exited from it (Table 11). This was a marked difference in exit behavior compared to the other three passageways, in which high percentages of fish remained inside. Average passage times for the few fish that completely passed through the four passageways were significantly different (P = 0.05) (Table 12). Like the results for steelhead, the SNK test results for chinook salmon indicated that fish swam rapidly through the transparent tube, averaging only 1.4 minutes, and more slowly through the other passageways (11.0 to 28.3 minutes).

Discussion

On average, less than one out of four chinook salmon per trial entered any of the passageways, whereas an average of two to three steelhead per trial entered the passageways. This suggested that the chinook salmon might not have been at a migratory developmental stage (see discussion on page 51). Therefore, the chinook salmon results should be accepted with caution.

Although results for chinook salmon were not statistically significant, behavior of the fish was similar to that of steelhead in that more chinook salmon entered the channel than the tube passageways. This confirmed the earlier finding by Prentice et al.

Table 9. Number of chinook salmon tested per trial and the average number entering the four test passageways. Probability value is based on a one-way ANOVA.

	Channel	Transparent tube	Inactive monitor	Active monitor
Number of fish/trial	4	4	4	4
Number of fish entering/trial				
Mean	0.8	0.4	0.4	0.6
SD	(0.7)	(0.6)	(0.6)	(0.7)

$F(3, 76) = 0.97$ $P = 0.41$

Table 10. Overall number of chinook salmon entering each test passageway and their mean entrance times: Probability value is based on a one-way ANOVA.

	Channel	Transparent tube	Inactive monitor	Active monitor
Number of fish entering	15	9	9	12
Entrance times in minutes				
Mean	15.0	22.2	21.1	24.6
SD	(17.9)	(24.6)	(23.1)	(20.0)

$F(3, 41) = 0.52$ $P = 0.67$

Table 11. Overall number and percentage of chinook salmon exiting each test passageway. Groupings determined by the 95% confidence intervals.

	Channel	Transparent tube	Inactive monitor	Active monitor
Number of fish exiting	9	9	4	5
Percentage of fish exiting				
Mean	62.5	100.0	50.0	40.0
SD	(48.3)	(00.0)	(53.5)	(51.6)
Confidence intervals	35.2-89.8	100.0-100.0	13.0-87.0	8.0-72.0
Groupings:	Transparent	Channel	Inactive	Active

Table 12. Overall number of chinook salmon exiting each test passageway and their mean passage times through the four test passageways. Probability value is based on a one-way ANOVA with groupings distinguished by SNK analysis.

	Channel	Transparent tube	Inactive monitor	Active monitor
Number of fish exiting	9	9	4	5
Passage time in minutes				
Mean	13.9	1.4	28.3	11.0
SD	(17.2)	(4.0)	(15.6)	(23.3)

$F(3, 23) = 2.97$ $P = 0.05$

Groupings: Transparent Channel Inactive Active

(1993) that small-tube passageways inhibit fish passage more than small channels. Both species entered all of the test passageways; however, fish behavior was different within the passageways. Fish behavior was unique in the transparent tube as all fish that entered it swam through it, with significantly shorter passage times for both species. Inside the transparent tube, fish of both species were observed diving into the bottom as if trying to reach the gravel that was visible below. Perhaps painting the bottom of the transparent tube would eliminate this diving behavior and make fish passage more natural. Approximately half of the steelhead or chinook salmon that entered the PIT-tag monitor did not exit the passageway, regardless of whether the monitor was active or inactive. This suggested that the reduced light within the PIT-tag monitor passageway was the determining factor in altering fish-passage behavior, and not the EMF or the hydraulic flow through the tube. These results confirmed the earlier conclusion by Prentice et al. (1993) that passage behavior of juvenile salmonids was not changed by a 400-kHz EMF.

Summary, Conclusions, and Recommendations

1. In 1989, NMFS began development of a new class of PIT-tag monitors to interrogate volitionally swimming juvenile fish. Passage behavior of chinook salmon and steelhead through four test passageways (open channel, transparent tube, inactive and active PIT-tag monitor) was examined in this study.
2. The chinook salmon used in this study appeared healthy but unresponsive, as fewer than one out of four fish entered any of the test passageways per trial compared to two or three out of four fish for the steelhead.

3. More chinook salmon and steelhead entered the open channel than the tube passageways. This confirmed an earlier finding that small-tube passageways inhibit fish passage more than small channels.
4. Both species entered all of the test passageways; however, fish behavior was different within the passageways. Almost all of the fish entering the channel and transparent tube passed through, while a significant percentage of fish remained in the inactive or active PIT-tag monitor. Fish swam rapidly through the transparent tube and significantly more slowly through the other three passageways.
5. Approximately half of the steelhead or chinook salmon that entered did not exit the PIT-tag monitor whether it was active or inactive. This suggested that the reduced light within the PIT-tag monitor passageway was the determining factor in altering fish passage behavior, and not the EMF or the hydraulic flow through the tube.
6. We thus recommend that monitors be designed to allow ambient light to enter the passageway or that artificial light be added to emulate natural light conditions during daylight hours. The best design would also incorporate channels and not tube-shaped passageways.

PIT-tag Monitors for Juvenile Salmon: Fish Passage and Light

Introduction

To design PIT-tag monitors that can effectively interrogate migrating juvenile salmonids, it is essential to establish the responses of fish to the monitor. A 1989 study (Prentice et al. 1993) and the previous study of four passageways (this report) determined that the best monitor design would incorporate channels instead of tube-shaped passageways. These studies also suggested that lighting was important to fish-passage behavior, because fewer fish swam through the test passageways with lower light intensities. Other studies have documented that fish-passage behavior is delayed if fish need to adjust to brighter or lower (i.e., nonambient) levels of light (Bell 1973, Munz and McFarland 1973, Maynard 1980).

This study, conducted at the NMFS Big Beef Creek Field Facility examined juvenile chinook salmon passage through uncovered channels and an artificially illuminated, covered channel. To determine if the light spectrum had a significant effect on passage behavior, two types of fluorescent lights were compared.

Materials and Methods

Test apparatus--The test apparatus consisted of two parallel, gray PVC channels (159-cm long by 10-cm wide by 51-cm high) connected to a single head tank and two aquaria (Fig. 9). A perforated partition in the head tank created a pretest holding area (90-cm long by 41-cm wide). A perforated gate initially blocked off two lo-cm-diameter orifices that joined the holding area and channels. Fish exited the channels into aquaria (284 L) that were equipped with screened standpipes to facilitate water flow. Water flowed through

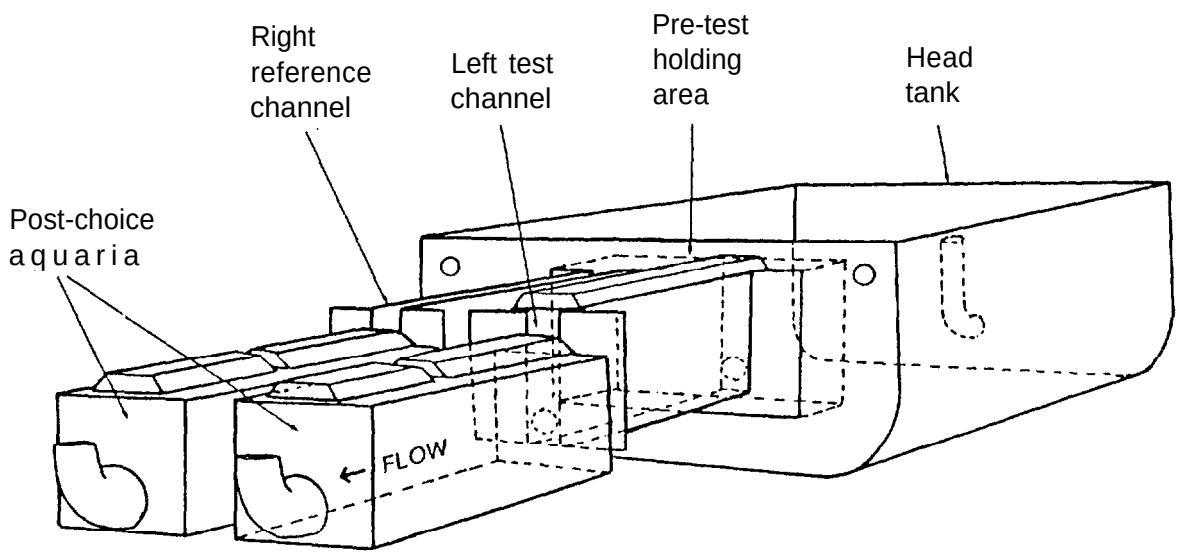

Figure 9. Test apparatus for evaluating effects of light on fish passage.

the test apparatus at approximately 20 L/minute. An aluminum lid (112-cm long by 61-cm wide by 43-cm high), under which two fluorescent bulbs were attached, covered 70% of the length of the test channel during the fluorescent spectrum trials. The lid was removed during the natural light trials. The right channel remained uncovered since it was used as a reference channel to determine if a side preference existed under natural light conditions. Except during side-preference trials, comparisons of the three light spectrums were made using fish passage through the test channel. A blue tarp was erected over the entire test apparatus to prevent shadows from influencing fish behavior.

Lighting--Passage behavior of yearling fall chinook salmon (Big Beef Creek stock) was compared under natural lighting and under two fluorescent light spectrums. General Electric Chroma-50 lights duplicated the spectrum of natural sunlight and had intensities of about 950 lux. General Electric SP-35 lights had spectrums with more red wavelengths than natural light and intensities of about 1,200 lux. The intensity of natural lighting in the channels was not measured, but it varied greatly with cloud cover and was often noticeably lower than the intensities produced by the fluorescent bulbs. During June and July 1990, trials using the fluorescent lights were alternated with natural daylight trials (controls). Approximately 20 trials were conducted for each of the two fluorescent spectrums, and 40 trials were conducted under natural daylight. The SP-35 lights were alternated with natural light conditions in the first 32 trials and in the last 11 trials. Chroma-50 lights were tested in the middle 41 trials.

Testing procedure--Tests were initiated by placing 30 juvenile chinook salmon into the holding area and giving them 15 minutes to acclimate. The gate was then raised to give fish access to either channel. An observer recorded the time it took the first salmon to enter each aquarium (emergence time). After 60 minutes, the gate was lowered, and fish in each aquarium were counted and removed. Then, the alternate lighting regime was set up and new fish were added to the holding area to start the next trial.

Statistics--Chi-square analyses were used to determine if these juvenile chinook salmon exhibited overall left- or right-side preferences. To examine fish passage under artificial and natural lighting, the average number of fish per trial completing passage through the test channel was computed for each of the three lighting spectrums. These averages and the corresponding emergence times were then compared with one-way ANOVAs. Significance was established at $P \leq 0.05$.

Results

The natural daylight trials were used to determine side preference between the test and reference channels. Over all of the natural daylight trials (1,259 fish), 181 yearling chinook salmon completed passage through the right reference channel, and 57 fish completed passage through the left test channel. There was a highly significant preference for the reference channel over the test channel ($P < 0.001$) (Table 13). This overwhelming preference for the uncovered reference channel over the test channel continued during the SP-35 ($P < 0.001$) and Chroma-50 ($P < 0.001$) trials. Overall percentages for passage through the test channel were 23.9, 22.1, and 24.0% for natural, SP-35, and Chroma-50 lights, respectively.

Table 13. Numbers of juvenile chinook salmon initially placed into the holding area and that completed passage under the three light spectrums. Percentages are given for fish completing passages through test and reference channels. Probability values are based on Chi-square analyses for side preference.

	Natural	SP-35	Chroma-50
Initial number of fish	1,259	694	637
Total number of fish completing passage	238	131	100
Percentage of fish completing passage (test)	23.9	22.1	24.0
Percentage of fish completing passage (ref.)	76.1	77.9	76.0
	χ^2 = 64.61; P < 0.001	χ^2 = 39.88; P < 0.001	χ^2 = 27.04; P < 0.001

Taking into account both the significant side preference and that only the test channel setup was changed, comparisons were made using only the fish passing through the test channel. Average numbers of fish passing through the test channel for the three spectrums were not statistically different ($P = 0.808$); averages varied slightly, ranging from 1.1 to 1.4 fish per trial (Table 14). Average emergence time for the first fish from the three groups was not significantly different ($P = 0.457$). Emergence times were similar for the three groups, ranging from 10.3 to 16.6 minutes (Table 15).

Discussion

Although the chinook salmon were from the same Big Beef Creek stock as in the 1989 study described previously (Prentice et al. 1993), it appeared that the fish behaved differently in the two studies. For example, fewer juvenile salmon migrated through both channels under natural light conditions in 1990 (19%) than in 1989 (70%). This difference is probably due to the studies being conducted at different times of year. The 1990 study was conducted during June and July, after the main spring migration period and before the smaller fall migration period for this population. The 1989 study was conducted in September, during the peak fall migration period. Another apparent difference between the two studies was that the 1989 study reported no apparent side preference. However, side preference was compared using all of the different passageways and because the fish actively avoided the tube-shaped passageways, the comparison **was** invalid. If the 1989 results for the two uncovered channels are compared independently of the data for the tube-shaped passageways, then the fish in 1989 exhibited the same side preference as was exhibited in 1990 ($P < 0.001$).

Table 14. Number of trials conducted, initial number of juvenile chinook salmon, and mean number of fish completing passage through the test channel per trial. Probability value is based on a one-way ANOVA.

	Natural	SP-35	Chroma-50
Number of trials	41	22	21
Initial number of fish/trial	30	30	30
Number of fish completing passage/trial			
Mean	1.4	1.3	1.1
SD	(1.4)	(1.5)	(1.3)

$F(2,81) = 0.214$ $P = 0.808$

Table 15. Average emergence times for the first fish to exit the test channel. Probability value is based on a one-way ANOVA.

	Natural	SP-35	Chroma-50
Emergence time in minutes			
Mean	16.2	16.6	10.3
SD	(17.1)	(14.6)	(10.4)

$F(2,81) = 0.793$ $P = 0.457$

In terms of designing PIT-tag monitors for juvenile salmon, this study and the previous studies have demonstrated that with extra lighting, passage behavior of juvenile salmon is similar to behavior under natural daylight conditions. Furthermore, this study indicated that the light spectrum does not appear to be a critical factor.

Summary, Conclusions, and Recommendations

1. This study examined juvenile salmon passage through a naturally illuminated, uncovered channel and an artificially illuminated, covered channel. To determine if the light spectrum affected fish behavior, two types of fluorescent light bulbs were compared.
2. The fish displayed a significant side preference for the right reference channel over the naturally illuminated, left test channel. However, the experimental design compensated for side preference by only comparing passage through the test channel, and therefore, this bias was removed from affecting the results.
3. Overall percentages for passage through the left test channel were similar for the three groups: 23.9, 22.1, and 24.0% for natural light, SP-35 light, and Chroma-50 light, respectively. Therefore, the light spectrum illuminating the fish passageway did not appear to be critical to fish passage.
4. Emergence times were also similar for the three groups and ranged from 10.3 to 16.6 minutes.
5. In terms of designing juvenile PIT-tag monitors, previous studies and this study have demonstrated that with adequate lighting, volitional passage behavior of juvenile salmon can be similar to that obtained under natural daylight conditions if hydraulic conditions are adequate.

PIT-tag Monitors for Juvenile Salmon: Field Evaluation of an Instream Model

Introduction

An instream PIT-tag monitor was designed to interrogate juvenile salmonids as they volitionally migrated downstream. Based on earlier results regarding fish response to different passageway conditions, the instream model contained a channel passageway that was artificially illuminated. This model was evaluated using groups of fish with two proportions (20 and 100%) of PIT-tagged smolts to determine if reading efficiency (RE) of the monitor was affected by the different proportions. The RE measures how many of the tagged fish that pass through a monitor are successfully recorded into the computer file.

It is possible to insert different tag-reading firmware chips into controllers (see Fig. 1). Reading firmware demodulates and decodes the encoded signal transmitted by the PIT tag. Initially, the single-read firmware used in interrogation systems at the dams was inserted into the controller for the instream monitor. This single-read firmware will process any tag code that consists of 10 alphanumeric characters, but it will not process a code that is an exact replicate of the preceding code. Its processing time ranges from 12.5 to 25.0 milliseconds (msec) per tag code.

However, if fish remain within a coil long enough for the tag code to be detected multiple times, erroneous tag codes can be created. With this volitional passage model, fish often remained for several seconds within a coil, causing multiple erroneous tag-code readings. To combat the erroneous tag-code problem, Destron-Identification Devices Inc. (Destron/IDI is the'manufacturer of the PIT tags and tag-interrogation equipment presently used in the

Columbia River Basin) modified the single-read firmware to produce a new double-read firmware. They added a repetitive-read microprocessor that required duplicate readings of a PIT-tag code before the tag code was recorded. In addition, they changed the software to automatically clear the controller memory every second so that the same tag could be read repeatedly without an intervening code.

The new double-read firmware compares the first two codes received from a tag. If they are identical, the codes are accepted, and the interrupt signal is sent. If they are different, a third code is compared. If the third code matches a previous tag code, it is accepted; however, if there is no match, the whole sequence starts over. Therefore, a reading cycle for the double-read firmware ranges from 25 to 40 msec. This study evaluated single-read and double-read firmware by comparing their REs for two proportions of tagged fish.

One method for determining behavioral responses of juvenile salmonids to a particular PIT-tag monitor design is to compare responses to the new design with those to an established interrogation system. In this study, we evaluated behavioral responses of juvenile fall chinook salmon to an instream PIT-tag monitor and to a smolt trap during short observational periods. Observations also yielded information on how fish passage behavior affected the RE of the instream monitor.

Materials and Methods

This study was conducted between 19 June and 26 August 1991 at the NMFS Big Beef Creek Field Facility. An 8-m-long by 4-m-wide section of spawning channel was enclosed with 91.5-cm-high weirs constructed with 12-mm hardware cloth (Fig. 10). The upstream weir was installed perpendicular to the channel. At the downstream end, a

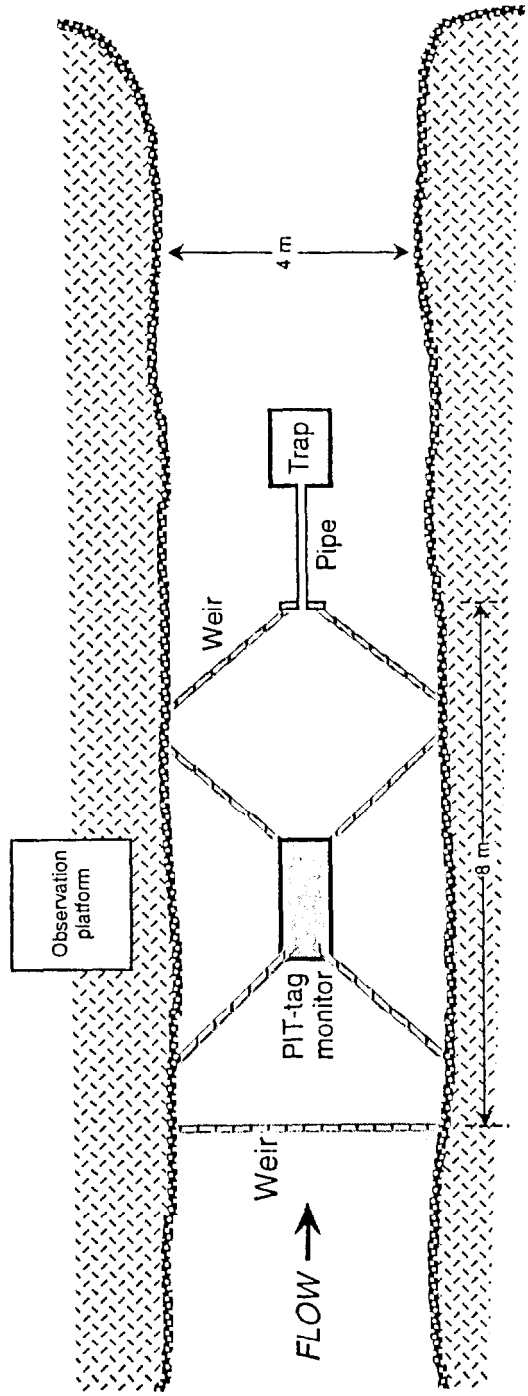

Figure 10. Test setup at Big Beef Creek Facility for evaluating the instream PIT-tag monitor.

V-shaped weir was installed that opened upstream and formed a 100-110° angle at its vertex. At the vertex, a 15.3-cm-diameter (cross-sectional area = 184 cm") PVC pipe was installed that extended 2 m downstream to a smolt trap (122-cm long by 91.5-cm wide by 76.2-cm high). Fish could not pass beyond the trap. A dual-coil PIT-tag monitor was positioned in the center of the test section. Hardware cloth V-leads were installed at both ends of the PIT-tag monitor to preclude fish movement around it and to help guide fish into its passageway from either direction.

To reduce RF emissions, the exterior of the PIT-tag monitor consisted of an open-ended aluminum shield (188-cm long by 75-cm wide by 102-cm high) (Fig. 11). The two excitation/detection coils were wrapped around a translucent passageway (107-cm long by 15.3-cm wide by 61-cm high; cross-sectional area = 1000 cm'). The PIT-tag monitor was submerged to a depth of 15 cm through the passageway. Four ceiling-mounted fluorescent lights (40-W daylight-spectrum bulbs) provided lighting within the passageway, and were controlled by a photocell that turned them off at night. Electronic components associated with the PIT-tag monitor were similar to those described by Prentice et al. (1990a, also see Fig. 1).

A 2.5-m high observation platform was constructed adjacent to the channel and covered with camouflage mesh to minimize disturbance to the fish during behavioral observations (Fig. 10). A convex mirror was mounted at each end of the RF-emission shield to enable observers to see inside the passageway (Fig. 11).

Fall chinook salmon smolts from the Washington State Department of Fisheries (WDF) Minter Creek Hatchery were used in two series of tests. At least 1 week before they were used in the study, salmon

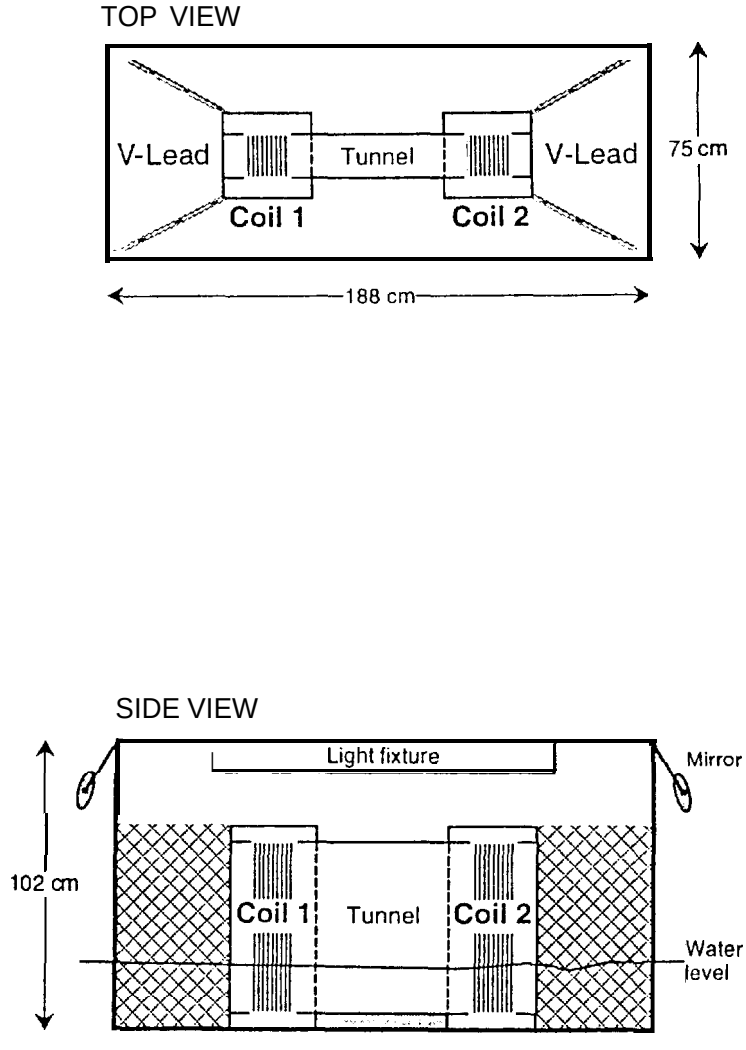

Figure 11. Top and side views of the instream PIT-tag monitor.

were tagged with PIT and fingerling tags using standard procedures (Prentice et al. 1990b). PIT-tagged and non-PIT-tagged individuals were marked with different colored fingerling tags. In Test-Series A (100% PIT-tagged), 25 PIT-tagged fish were released into the upstream section and recaptured after 24 hours. In Test-Series B (20% PIT-tagged), 10 PIT-tagged and 40 non-PIT-tagged fish were released. Ten replicates of each test series were conducted.

Both test series incorporated 90-minute observational periods. Observers recorded the numbers of salmon approaching or entering the smolt trap and monitor, passage times, orientation to current during passage, and duration of fish movements within 1 m of the monitor and trap entrances. A stopwatch was synchronized to the computer clock associated with the PIT-tag monitor, and was used to record the time and duration of each event. This permitted REs to be calculated from the observational data. Durations of movements within 1 m of the devices were recorded to determine if fish were reluctant to enter the monitor or trap. Whenever possible, passage times were recorded to measure length of exposure to the EMF.

Twenty-four hours after release, all fish were captured with dip nets and their locations were noted (i.e., upstream section, downstream section, or smolt trap). Fish inside the monitor were considered to be in the upstream section. At the time of capture, each fish was interrogated for the presence of a PIT tag using a hand-held PIT-tag scanner. If PIT tagged, the PIT-tag code and capture location were recorded.

The RE of the PIT-tag monitor was calculated by comparing the PIT-tag codes recorded by the computer to those of tagged fish recovered from the downstream section and trap. Only fish recovered

downstream from the PIT-tag monitor were used in this efficiency calculation, because it could be assumed that they had passed through the monitor at least once. Fish recovered from the upstream section were excluded from the calculation, because it was impossible to determine whether they had remained upstream from the PIT-tag monitor for the entire 24 hours or if they had escaped detection while transiting the monitor two or more times. A second set of REs was also calculated by comparing the computer records to the observed fish passage data during the 90-minute observational periods.

Numerous PIT-tag codes that had errors in their alphanumeric characters were read during the first seven trials (four replicates in Test-Series A and three replicates in Test-Series B) when single-read firmware was used. Therefore, double-read firmware was used in all of the remaining trials. Tag-code error rates were calculated before and after the firmware change.

Comparisons of REs between the two firmwares and between the two test series for each firmware for the 24-hour and observational data were analyzed with independent t-tests. Significance was established at $P \leq 0.05$.

Results

With the single-read firmware, erroneous tag codes tended to occur when a tagged fish remained in a coil long enough to be read more than once. Typically, the correct code was recorded, followed by an erroneous tag code that "cleared" the microprocessor for another reading of the correct code. The erroneous tag codes were usually one or two character deviations from the correct alphanumeric sequence. Pooled data from the seven trials using the single-read firmware indicated that 530 of the 1,536 (34.5%) records contained erroneous

were tagged with PIT and fingerling tags using standard procedures (Prentice et al. 1990b). PIT-tagged and non-PIT-tagged individuals were marked with different colored fingerling tags. In Test-Series A (100% PIT-tagged), 25 PIT-tagged fish were released into the upstream section and recaptured after 24 hours. In Test-Series B (20% PIT-tagged), 10 PIT-tagged and 40 non-PIT-tagged fish were released. Ten replicates of each test series were conducted.

Both test series incorporated 90-minute observational periods. Observers recorded the numbers of salmon approaching or entering the smolt trap and monitor, passage times, orientation to current during passage, and duration of fish movements within 1 m of the monitor and trap entrances. A stopwatch was synchronized to the computer clock associated with the PIT-tag monitor, and was used to record the time and duration of each event. This permitted REs to be calculated from the observational data. Durations of movements within 1 m of the devices were recorded to determine if fish were reluctant to enter the monitor or trap. Whenever possible, passage times were recorded to measure length of exposure to the EMF.

Twenty-four hours after release, all fish were captured with dip nets and their locations were noted (i.e., upstream section, downstream section, or smolt trap). Fish inside the monitor were considered to be in the upstream section. At the time of capture, each fish was interrogated for the presence of a PIT tag using a hand-held PIT-tag scanner. If PIT tagged, the PIT-tag code and capture location were recorded.

The RE of the PIT-tag monitor was calculated by comparing the PIT-tag codes recorded by the computer to those of tagged fish recovered from the downstream section and trap. Only fish recovered

downstream from the PIT-tag monitor were used in this efficiency calculation, because it could be assumed that they had passed through the monitor at least once. Fish recovered from the upstream section were excluded from the calculation, because it was impossible to determine whether they had remained upstream from the PIT-tag monitor for the entire 24 hours or if they had escaped detection while transiting the monitor two or more times. A second set of REs was also calculated by comparing the computer records to the observed fish passage data during the 90-minute observational periods.

Numerous PIT-tag codes that had errors in their alphanumeric characters were read during the first seven trials (four replicates in Test-Series A and three replicates in Test-Series B) when single-read firmware was used. Therefore, double-read firmware was used in all of the remaining trials. Tag-code error rates were calculated before and after the firmware change.

Comparisons of REs between the two firmwares and between the two test series for each firmware for the 24-hour and observational data were analyzed with independent t-tests. Significance was established at $P \leq 0.05$.

Results

With the single-read firmware, erroneous tag codes tended to occur when a tagged fish remained in a coil long enough to be read more than once. Typically, the correct code was recorded, followed by an erroneous tag code that "cleared" the microprocessor for another reading of the correct code. The erroneous tag codes were usually one or two character deviations from the correct alphanumeric sequence. Pooled data from the seven trials using the single-read firmware indicated that 530 of the 1,536 (34.5%) records contained erroneous

tag codes. During the 13 trials following the change to double-read firmware, there were 5,948 records written without an erroneous tag code.

Mean RE (over 24 hours) for the four trials of Test-Series A (100% PIT-tagged salmon) using single-read firmware was 80.2 ± 7.6% ($\bar{x}$ ± SD) (Table 16). Of the 95 tagged fish recovered from the lower section and trap, 76 were recorded by the computer. Mean RE for the three trials of Test-Series B (20% PIT-tagged fish) using the single-read firmware was 96.7 ± 5.8%, with 21 of the 22 recovered tagged fish being recorded. Single-read firmware yielded a significantly higher RE for Test-Series B than for Test-Series A (P = 0.031).

Mean RE for the six trials in Test-Series A using double-read firmware was 91.5 ± 9.5%, with 99 of the 110 recovered tagged fish being recorded (Table 16). Mean RE for the seven trials in Test-Series B after the firmware change was 95.2 ± 6.0%, with 57 of the 60 recovered tagged fish being recorded. Double-read firmware yielded a higher RE for Test-Series B than for Test-Series A, but this difference was not significant (P = 0.441). Although changing from single-read to double-read firmware yielded a large increase in mean RE for Test-Series A (11.3%), the increase was not statistically significant (P = 0.075):

The number of PIT-tagged salmon observed swimming through the monitor during each 90-minute observational period ranged from 5 to 40 in Test-Series A and from 0 to 1 in Test-Series B for the single-read firmware trials. In the double-read firmware trials, observations ranged from 0 to 31 for Test-Series A (25 PIT-tagged fish) and from 0 to 13 for Test-Series B (10 PIT-tagged fish). As

Table 16. Number of trials and mean reading efficiencies for Test-Series A (100% PIT-tagged fish) and Test-Series B (20% PIT-tagged fish) using single-read and double-read firmware. Probability values are based on t-tests.

Firmware	Test-Series A	Test-Series B
Single-read		
No. trials	4	3
Mean	80.2	96.7
SD	(7.6)	(5.8)
Double-read		
No. trials	6	7
Mean	91.5	95.2
SD	(9.5)	(6.0)

A vs B:		
Single-read	t = 3.27	P = 0.031
Double-read	t = 0.81	P = 0.441
Single vs Double:		
Test-Series A	t = 2.09	P = 0.075
Test-Series B	t = 0.36	P = 0.731

these numbers indicate, even over a short period of time, individual fish made multiple trips through the monitor. Fish were also observed traveling in groups through the monitor. During five observation periods, no PIT-tagged fish swam through the PIT-tag monitor: once during single-read firmware observations and four times during double-read firmware observations. These occurrences of zero passage reduced the statistical power of the RE comparison between the two firmwares calculated from the observation data. Observational data from the single-read firmware trials in Test-Series A and Test-Series B yielded REs of 57.4 ± 13.2% and 50.0 ± 70.7%, respectively (Table 17). These REs were not significantly different (P = 0.907). Data from the six observational periods in Test-Series A and seven observational periods in Test-Series B run after the firmware change yielded REs of 83.6 ± 18.5% and 100 ± 0.0%, respectively. Although the RE of Test-Series B was higher than Test-Series A, the 16.4% difference was not significant (P = 0.263). Similarly, the increases in REs between the two firmwares for Test-Series A (26%) and Test-Series B (50%) were large, but the reduced statistical power resulted in these differences being insignificant for either Test-Series A (P = 0.129) or Test-Series B (P = 0.500).

The observational periods yielded few differences between the two test series or between fish responses to the monitor and smolt trap. Because the salmon were released into the upstream section, significantly larger groups of fish aggregated within 1 m upstream of the monitor than within 1 m of the pipe (P < 0.001 for both series). Average durations that salmon stayed within 1 m of the trap and the monitor were similar and ranged from 20.1 to 34.4 seconds. In

Table 17. Number of non-zero trials and mean reading efficiencies for the observational data from Test-Series A (100% PIT-tagged fish) and Test-Series B (20% PIT-tagged fish) using the single-read and double-read firmware. Probability values are based on t-tests.

Firmware	Test-Series A	Test-Series B
Single-read		
No. trials	4	2
Mean	57.4	50.0[a]
SD	(13.2)	(70.7)
Double-read		
No. trials	3	6
Mean	83.6	100.0
SD	(18.5)	(00.0)

[a] based on two tagged fish

A vs B:		
Single-read	t = 0.15	P = 0.907
Double-read	t = 1.54	P = 0.263
Single vs Double:		
Test-Series A	t = 2.08	P = 0.129
Test-Series B	t = 1.00	P = 0.500

Test-Series B, although the difference was small, fish stayed within 1 m of the trap significantly longer (26.6 ± 20.7 seconds) than they did within 1 m of the monitor (20.1 ± 14.1 seconds) (P = 0.011). In Test-Series A, they averaged 25.8 ± 35.3 seconds at the trap and 34.4 ± 78.5 seconds at the monitor, but this difference was not significant (P = 0.419). In both test series, passage time for fish to transit the monitor ranged from 3 to 55 seconds, with a mean of 12.4 ± 13.8 seconds. The discharge end of the trap pipe was obscured from view; therefore, it was not possible to get passage times through the pipe. However, it was observed that the salmon entered the pipe tail first while they swam head first through the monitor.

Discussion

Observational data indicated that the PIT-tag instream monitor missed reading some PIT-tagged fish observed swimming through it. The RE of the monitor was reduced by the tendency for juvenile chinook salmon to swim in groups and to make multiple trips through the instream monitor. Changing from single-read to double-read firmware solved the multiple trip problem, because the double-read firmware could read the same tag once every second without the need for an intervening code. With the single-read firmware, a tagged fish swimming back upstream and then immediately downstream would be missed by the monitor the second time it passed unless another tagged fish had transited the monitor in the interim or unless a tag-code error had occurred. Since there were more PIT-tagged fish in Test-Series A than Test-Series B, changing from single-read firmware to double-read firmware resulted in increased REs in Test-Series A.

In general, REs for the instream monitor were higher for

Test-Series B than for Test-Series A. The instream monitor was able to read the tags more efficiently with a lower proportion of PIT tags, because monitors cannot read tag codes when two or more PIT-tagged fish swim through a coil simultaneously. Since salmon rarely travel side by side for long, REs might be improved by using three or four coils instead of the two coils in the tested design.

Double-read firmware corrected the erroneous tag code problem. Since erroneous tag codes have been occasionally recorded at the dams, some have suggested incorporating the double-read firmware into the interrogation systems at all dams. However, there are nonvolitional situations (e.g., pumping fish at a hatchery) when passage through a coil might occur in less than 25 msec, and in these situations, the double-read firmware would be less efficient than the single-read firmware. Therefore, the situation should dictate which firmware should be used.

Results from the behavioral observations indicated few differences in the responses of juvenile chinook salmon to the monitor and smolt trap. For example, the average times spent within 1 m of the monitor or smolt trap were similar and suggested that salmon were equally willing or reluctant to enter either apparatus. Fish probably entered and swam through the trap tail first because it was dark in the tube and in this position, they could retreat quickly if they were to encounter a predator. In contrast, they probably swam head first through the monitor because it was sufficiently illuminated to enable juvenile salmon to determine that there were no predators present.

Passage times through the PIT-tag monitor indicated that the maximum EMF exposure for a single passage was 55 seconds; however, total exposure may have been several times greater for salmon that

made multiple trips through the monitor. Multiple passages through the monitor may have been encouraged by confinement to a short stream section. Additional testing with upstream and downstream barriers either removed or positioned farther away from the monitor would address this point.

Summary, Conclusions, and Recommendations

1. An instream PIT-tag monitor was evaluated using groups of fish with two proportions (20 and 100%) of PIT-tagged chinook salmon smolts to determine if RE of the monitor was affected by the different tag densities. Single-read and double-read firmware were also evaluated by comparing their REs for the two fish groups. During 90-minute observations, behavioral responses of the juveniles to the instream monitor and to a smolt trap were evaluated.
2. The RE of the monitor was reduced by the tendency for juvenile chinook salmon to swim in groups and to make multiple trips through the instream monitor. Changing from single-read to double-read firmware solved the multiple trip problem, because the double-read firmware could read the same tag once every second without the need for an intervening code, while the single-read firmware could not.
3. In general, REs for the instream monitor were higher for the 20% tagged group than for the 100% tagged group, regardless of firmware. The instream monitor was able to read the tags more efficiently at lower tag densities, because a monitor cannot read tag codes when two or more PIT-tagged fish swim through a coil simultaneously.

4. Erroneous tag codes were read with single-read firmware when a tagged fish remained in the PIT-tag monitor long enough to be read more than once. Double-read firmware eliminated the erroneous tag codes by requiring two identical tag codes to be registered before recording the code and by being able to read the same tag once every second without the need for an intervening code.
5. Observational data showed no significant differences between the monitor and conventional smolt trap in affecting the volitional migratory behavior of juvenile salmonids.
6. Since fish do not swim side by side for long, we recommend that a minimum of three coils be used for instream monitors. We also recommend double-read firmware for all instream PIT-tag monitors. However, double-read firmware cannot be used in situations where fish stay within the energizing field of the monitor for less than 24 msec.

Development and Evaluation of a Separation System for Specific PIT-tag Codes

Introduction

Slide gates are currently used at several Columbia River Basin dams to separate PIT-tagged juvenile salmon from untagged fish by the presence or absence of PIT tags. During normal operation, when a PIT tag is read at a particular coil, a controller activates a trigger mechanism that opens the slide gate to separate the tagged fish (see pages 4-6 for a complete description of the basic presence/absence separation system). Many specific research questions in fish transportation, survival, and other fields could be addressed by incorporating a computer program to separate tagged fish based on their specific PIT-tag codes.

A prototype computer program for this purpose was written and then evaluated at NMFS Manchester Marine Experimental Station. A testing apparatus that simulated a portion of a juvenile fish bypass/collection facility, including a separation system, was constructed at Manchester. To evaluate the computer program, the separation system was initially set up with the standard components used at the dams (single-read firmware and a nonadjustable slide gate). Two modifications of the separation system, an adjustable slide gate and double-read firmware, were then evaluated using the new separation-by-code computer program.

Materials and Methods

Simulation testina apparatus--Tests were conducted with an apparatus that simulated the water velocity and flume arrangements presently used at juvenile salmon bypass/collection facilities (Fig. 12). Pond water **was** pumped into a head tank (4.3-m long by

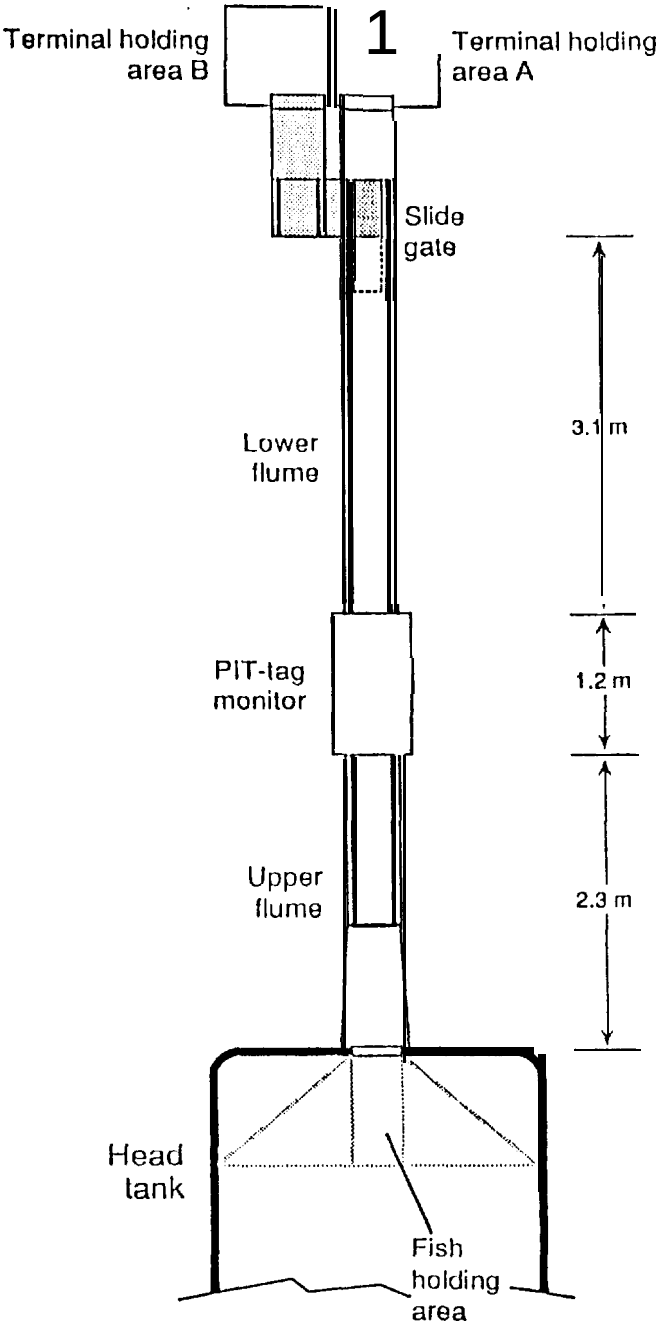

Figure 12. Testing apparatus located at NMFS Manchester Marine Experimental Station that simulated water velocity and flume arrangement conditions found at juvenile salmon bypass/collection facilities.

2.5-m wide by 1.3-m high) with a vertical gate connecting it to the upper flume section. The head tank simulated a water and debris separator. A small section of the tank (90-cm long by 32-cm wide by 63-cm high) was screened off to create a holding area for fish. The testing apparatus included rectangular flumes that measured 30-cm wide by 45-cm high. To improve the laminar water flow, corrugated roofing material was placed in the upper 2.4 m of the flume. Unlike some of the flumes at the dams, this upper flume was neither sloped downwards nor covered. The PIT-tag monitor (1.2-m long with a cross-sectional area of 700 cm^2) was located 2.3 m from the head tank and 3.1 m above the slide gate.

The slide gate originally tested was nonadjustable and had a 45-cm opening, which is the standard model used at the dams. Since adjustable slide gates (0 to 180-cm openings) were scheduled to be installed at the dams in 1993, we evaluated one at Manchester prior to the installations. For this evaluation, the opening of the adjustable slide gate was set at 45 cm to compare it to the original slide gate.

Trials were conducted at water velocities of approximately 3 m/sec, and velocities were achieved by opening the vertical gate to a height of 10 cm with a constant head tank depth of 52.5 cm. At that water velocity, the computer program was set to open the slide gate (same for both slide gates) approximately 600 msec after it had read and processed a tag. The gate remained open for approximately 1,000 msec before it started to close.

Underneath the slide gate, separated sticks (see below) or fish were directed into a second flume that led to a terminal holding area (designated "B") while any nondiverted sticks or fish stayed in the main flume and ended up in terminal holding area A (Fig. 12).

PIT-tag monitor and computer system--A dual-coil PIT-tag monitor was used, but its coils were connected to a modified controller. Both single-read and double-read firmware were tested in this study because the decision had not yet been made on which firmware chip would be used at the dams in the future. Single-read firmware accepts any transmission of a complete tag code and processes tag codes rapidly (12.5 msec/tag); however, it also produces erroneous tag codes (see pages 55-69; Pacific States Marine Fisheries Commission, Unpublished data collected at the dams. 455E 82nd Drive, Suite 100, Gladstone, Oregon 97027-2522.). Double-read firmware is slower (25-40 msec/tag), but does not produce erroneous tag codes.

Like the controller, the computer hardware was modified for rapid communication and processing of the 20,000 specific tag-codes in the database. PIT-tag codes to be separated were entered into the database. A 386 computer was equipped with a General Purpose Interface Bus (GPIB) card and a specialized counter/timer input/output (I/O) card. All tags could potentially be read by both coils of the PIT-tag monitor. After a tag code was accepted by the controller and transmitted to the computer, the computer program looked up that specific tag code in the database, determined which action (separation or no separation) should be taken, and started the timer for activating the slide gate (if appropriate). The entire sequence took approximately 1.2 seconds.

To record data during the evaluations of the separation-by-code computer program and separation-system modifications, a computer file was created for each trial. The file contained a record for each time a PIT tag was read, which included the PIT-tag code, controller and

coil identification numbers, time, date, and action that should have occurred for that tag code.

Efficiencies--The computer program and separation-system modifications were evaluated with both tagged wooden sticks and with fish to determine reading and gate efficiencies. The RE for the dual-coil PIT-tag monitor was calculated as the percentage of tagged sticks or fish read by at least one coil during that trial. NMFS has established a system RE (all of the coils combined within an interrogation system) of 95% as the acceptable daily performance rate for the Columbia River Basin dams (Prentice et al. 1993). However, no criterion has yet been established for gate efficiencies (GEs): we anticipate that a sliding scale will be required because acceptable GEs vary with fish density.

Inconsistent REs for the stick trials were a recurring problem during Manchester simulation testing until the main cause was identified in May 1993: the top shield on the monitor had not been securely fastened down. This allowed the shielding to expand and contract with temperature changes. Screwing down the top shield notably reduced the incidence of inconsistent REs. However, because of the previous inconsistency in REs, we decided to accept tests with lower REs or stick trials with system REs > 90%. The 90% rate was chosen because the simulation testing apparatus had only two coils versus the eight coils typically found at juvenile collection facilities (see Figs. 3-6).

All fish trials were used because poor orientation of tagged fish relative to the monitor is also known to reduce REs. In addition, the fish trials were run only on days when the separation system consistently performed well with sticks (this indicated that the

shielding was not a problem that day). The same range of REs was recorded for fish trials before and after the shielding problem was corrected, which suggested that fish behavior was the primary cause for the lower REs in the fish trials.

The GE for each trial was calculated using the theoretical and actual distributions of tagged sticks or fish in the two terminal holding areas based on which tags had been read. Each PIT-tagged stick or fish that was programmed to be separated could follow one of four scenarios: 1) be read and be separated (correct action), 2) be read and not be separated (wrong action), 3) not be read and be separated (wrong action), and 4) not be read and not be separated (correct action). In scenario 4, the PIT-tagged stick or fish was acting as an untagged fish or as a PIT-tagged stick or fish that was not included in the database. Therefore fish or sticks in this scenario should not have been separated. Thus, GE represented the percentage of correct actions for each trial.

Stick trials--Wooden sticks were employed, because both their rate of entry and orientation could be controlled. In contrast, fish often passed the monitor in groups and at various angles; both of which can reduce RE and GE. Thus, stick results provided a baseline against which fish results and modifications to the separation system could be compared.

For the stick trials, 50 PIT-tagged and numbered sticks were individually introduced at the upper end of the flume at a rate of approximately one per second. With the original setup (nonadjustable slide gate and single-read firmware), PIT-tagged sticks were used to acquire baseline REs and GEs by separating specific tag codes that represented three tag-code densities (20, 50, and 80%) within the

population. To facilitate data collection, the same sticks or tag codes were programmed to be separated in each replicate of a tag-code density (e.g., for the 20% tag-code group, the tag codes from sticks 1, 6, 11, 16, 21, 26, 31, 36, 41, and 46 were appended to the computer database). Regardless of what percentage of tags were separated, REs and GEs were calculated with all 50 tags. Performance of the alternative setups (adjustable slide gate and double-read firmware) was also evaluated using the same three groups of tag codes. From 17 to 27 acceptable trials were conducted with the 20, 50, and 80% tag-code groups for each of the 3 separation-system setups. Duration of each trial was read from the computer file and was used to estimate the number of PIT tags processed per hour.

Fish trials--Both rainbow trout (*Oncorhynchus mykiss*) and coho salmon juveniles, whose fork lengths ranged from 50 to 150 mm, were used in the fish trials. Since untagged fish were included in fish trials, the duration of each trial had to be timed manually. Around half of the fish trials were only concerned with REs and developing test protocols. Test protocols were designed to consider 1) how to introduce fish to get good orientation through the monitor and to reduce their tendency to exit in groups, 2) tagged to untagged ratios, and 3) the number of fish to use per trial (25-50 fish/trial were tested). Most, but not all of the trials included in the calculation of REs and GEs, used 50 fish.

For the 20, 50, and 80% tag-code groups, 10, 25, and 40 tagged fish were used in the 50-fish trials, respectively. The remaining fish were untagged. Tagged fish were first interrogated with a hand-held PIT-tag scanner to confirm that their tags were functioning. Their tag codes were then added to the computer database. The head

tank was filled and the vertical gate opened before tagged and untagged fish were combined in the fish holding area. Combined fish were trapped behind a moveable meshed barrier that prevented them from swimming out the vertical gate until they had calmed down. The meshed barrier was then slowly pulled toward the vertical gate until it was lifted out entirely. Trial time started when the first fish entered the monitor. After some fish had left the tank volitionally, the remaining fish were slowly crowded out with the meshed barrier. The trial was stopped when the last fish had entered the monitor.

After passing-through the separation system, the final destination of individual fish was determined. The actual distribution was then compared to the theoretical distribution determined by the computer program. Since this procedure seemed to work consistently, more fish trials will be conducted in 1994.

Statistics--One-way ANOVAs were used to analyze baseline RE and GE data from the original setup. Incomplete factorial ANOVAs were used to compare the original separation-system setup with the other two setups. Complete factorial designs could not be used because both firmwares were not tested with the original gate. Significance was established at $P \leq 0.05$. Significant F values were further analyzed with Tukey tests.

Results

Stick trials--Most stick trials took approximately 60 seconds to complete, which was equivalent to a processing rate of approximately 2,500-3,000 tags/hour (Tables 18 and 19). Average REs for the original setup and for the two alternative separation-system setups evaluated were all above the NMFS 95% acceptable rate (including the trials with only 90% REs). Baseline data for the original setup

Table 18. Number of stick trials, reading efficiency, gate efficiency, and number of tags processed per hour from evaluation of the tag-code computer program using the original setup (slide gate and single-read firmware) at three tag-code densities. Probability values are based on one-way ANOVAs.

	Original gate and single-read firmware			
	Tao-code densities			
	20%	**50%**	**80%**	P value
Number of trials	**26**	**22**	**19**	
Reading efficiency				
Mean	97.5	98.1	99.2	0.093
SD	(3.0)	**(2.7)**	(1.2)	
Gate efficiency				
Mean	99.3	99.3	99.7	0.491
SD	(1.3)	(1.4)	(0.8)	
Tags/hr				
Mean	2,849.3	2,817.5	2,919.0	**0.530**
SD	**(240.3)**	**(362.0)**	(261.9)	

Table 19. Summary results for evaluations of the tag-code computer program using the two alternative setups (adjustable slide gate and either single-read (SR) or double-read (DR) firmware) at three tag-code densities. Number of stick trials, reading efficiency, gate efficiency, and number of tags processed per hour are presented.

	Adjustable gate and SR firmware			**Adjustable gate and DR firmware**		
	Taa-code densities			Tao-code densities		
	20%	50%	80%	20%	50%	80%
Number of trials	22	27	22	17	23	**19**
Reading efficiency						
Mean	97.6	98.1	99.1	99.1	98.3	98.3
SD	(2.9)	(3.3)	(1.7)	(1.6)	(3.5)	(5.0)
Gate efficiency						
Mean	97.4	97.8	99.3	99.1	97.5	99.5
SD	(2.7)	(2.7)	(1.4)	(1.0)	(3.2)	(1.1)
Tags/hr						
Mean	**2838.9**	**2897.9**	**2990.0**	2793.1	2537.0	2502.0
SD	(347.8)	(254.0)	(215.9)	(398.3)	(576.2)	(604.8)

(nonadjustable slide gate and single-read firmware) indicated no significant differences in REs (P = 0.093), GEs (P = 0.491) or tag processing rates (P = 0.530) among the 20, 50, and 80% tag-code groups (Table 18).

At water velocities of approximately 3 m/sec and tag processing rates of nearly 3,000/hour, there was no difference between single-read and double-read firmware in terms of RE (P = 0.602) (Table 20). Since the same PIT-tag monitor was used for all of the trials, and all of the REs were based on 50 tags, it was not surprising that we observed no significant differences among REs for any of the categories. Consequently, RE results for both slide gates and both firmwares could be combined for the three tag-code densities. This yielded an average RE of 98.5 ± 2.4% (X ± SD) at an average processing rate of 2,796.3 ± 404.7 tags per hour.

Initially, the adjustable slide gate opened up more than 45 cm if a second tag triggered it before it had completely closed. A larger air supply system and pneumatic cylinder were installed, and they reduced the frequency of this occurrence. However, the larger openings resulted in the adjustable slide gate having lower overall GEs ($\bar{x}$ = 98.4%) than the nonadjustable slide gate ($\bar{x}$ = 99.4%). Although the difference was small, it was significant (P < 0.001) (Table 20).

However, with the adjustable slide gate, there were no differences in GEs between single-read and double-read firmware (P = 0.306). Out of all single-read firmware stick trials, 14 erroneous tag codes were produced (0.2% of all the tags processed), but all of these erroneous tag codes were immediately preceded or followed by correct tag codes. Therefore, both erroneous and correct

Table 20. Degrees of freedom (df) and probability (P) values from the incomplete factorial ANOVAs that compared the three setups of the separation system for reading efficiency and gate efficiency. Groupings from the Tukey analysis on tag-code density are given below the table.

	df	P values: Reading efficiency	P values: Gate efficiency
Gate	1	0.953	< 0.001
Firmware	1	0.602	0.306
Tag-code density	2	0.668	0.030
Gate x tag-code density	2	0.980	0.192
Firmware x tag-code density	2	0.267	0.212
Error	186		

Tag-code density groupings:	20%	50%	80%
		---	---

tag codes were part of the computer file. The correct tag codes were processed correctly by the computer program.

Since all of the sticks were PIT tagged, REs were always based on 50 sticks regardless of whether a 20, 50 or 80% tag-code group was being separated. Consequently, tag-code density did not significantly affect the overall REs of the three setups (P = 0.668) (Table 20). However, tag-code density did significantly affect the overall GEs (P = 0.030). The Tukey test yielded overlapping groups, but also indicated that the 80% tag-code group was separated more efficiently than the 50% tag-code group. None of the interaction terms were significant.

Fish trials--Too few fish trials were run for the individual setups to statistically compare REs or GEs. Since the stick trials did not indicate differences in REs among the different setups evaluated, all of the fish trials (n = 35) were combined: REs ranged from 78 to 100% for the fish trials and averaged 92.3 ± 6.9% ($\bar{x}$ ± SD). Since the stick trials demonstrated significant differences among the GE results, the GE results for the fish trials were not combined. Therefore, only observational and range results are given. Fish, especially the larger ones, were observed swimming in the flume between the monitor and slide gate. This made it possible for fish programmed to be separated (i.e., their tag codes were in the database) to miss the gate and for fish not programmed to be separated to pass the gate. Consequently, GEs were low, ranging from 63 to 92%. The average processing rate was 1,087.3 ± 623.9 fish per hour.

Discussion

The prototype separation-by-code computer program performed well, proving that it was possible to separate tagged wooden sticks and fish

based on their specific PIT-tag codes. Although there were some statistical differences observed among the stick trial results, average REs and GEs for all three setups at all three tag-code densities were above 95%.

Daily REs for the stick trials were more consistent after the shielding was securely fastened in May 1993; however, 2 out of the 65 subsequent trials had REs below 85%. This occasional decrease in RE for one monitor over a short time period has also been observed at the Columbia River Basin dams by personnel from the NMFS Sand Point Electronics Shop. They have not been able to explain this phenomenon. However, at the dams, this occasional erratic performance causes little concern because each fish must pass through several PIT-tag monitors. Therefore, the overall system RE is not affected.

In contrast to the stick trials, the average RE for the fish trials was below the 95% acceptable rate (92.3%). One possible reason was that all of the fish trials were evaluated, while before May 1993, only stick trials with > 90% REs were evaluated. In addition, the turbulence in the flume affected orientation of fish more than of sticks. Sticks were introduced into particular troughs of the corrugated roofing that were close to laminar flow. REs for the tagged fish would probably be improved by inserting a second monitor, which would further increase the chances of reading fish when their orientation was satisfactory.

In the study evaluating the instream model of a juvenile PIT-tag monitor, the monitor was less efficient at reading tags with a 100% tagged population (Test-Series A) than with a 20% tagged population (Test-Series B) because tags would be missed when tagged fish swam through the monitor in groups (see pages 66-67). To determine whether

the 80% tag-code group might exhibit the same tendency of lower REs relative to the 20% tag-code group, more replicates of both groups need to be conducted. Since fish rarely remain side by side, inserting the second dual-coil monitor, as previously suggested, would probably improve REs for all tag-code densities. A second monitor would also make the simulated interrogation system more similar to the existing systems at dams, which typically use eight coils to calculate system REs.

Individual fish size and the tendency of fish to exit in groups contributed to the low GEs recorded for the fish trials. Larger fish tended to remain in the flume above the slide gate longer than smaller fish, and they consequently missed the gate at a higher rate than smaller fish.

A previous study showed that darkened flumes increased the GEs of a basic presence/absence separation system (Achord et al. 1992). Therefore, lids built for the main flume to reduce RF emissions from the monitor will be used in future trials. GEs for the tagged fish might also be improved if the distance between the monitor and slide gate was shortened because this would reduce the effects of fish swimming in the flume. A shorter distance is possible with the new adjustable slide gate because the larger air supply and specialized pneumatic cylinder make it possible 'for the gate to be activated sooner after detection.

Fish could not remain for long periods of time in this PIT-tag monitor as they could in the instream monitor, and consequently, there were far fewer erroneous tag codes generated for fish or sticks. This resulted in no significant difference in performance (REs and GEs) between the two firmwares in this study.

Although few erroneous codes were generated by the single-read firmware, there is a possibility that a particular erroneous code could be identical to a correct code. This could seriously undermine accurate monitoring of fish movement in the Columbia River Basin. On the other hand, though the double-read firmware is robust with regard to erroneous codes, it has a slower processing time, which might be a problem with high water velocities or when attempting to interrogate adult salmonids swimming at full speed. The Manchester simulation testing apparatus can presently generate water flows of 3 m/sec, but at Lower Monument Dam, water flow approaches 4 m/sec. To conduct tests at water flows of 4 m/sec, we are adding a third pump to our simulation testing apparatus. More testing will be done with double-read firmware at these higher velocities before the decision is made about incorporating this firmware into the interrogation systems at the dams.

All of these trials processed higher concentrations of PIT tags per hour than had been recorded at Columbia River Basin dams for a single day through December 1992 (maximum = 700 PIT tags/day). However, the number of fish (tagged and untagged) per hour at the dams can be higher than those used in this study. As demonstrated by Matthews et al. (1990), these higher concentrations would reduce GEs, since more untagged fish would be separated along with desired tagged fish.

When working with fish where fish aggregation and differential fish sizes can affect results, one must decide how many untagged fish (or undesired tagged fish) are acceptable to capture and whether it is acceptable to miss desired PIT-tagged fish. To improve accuracy, it might be necessary to have primary and secondary separation systems in

some cases. For example, all PIT-tagged fish could be separated first, and then the desired PIT-tagged fish could be separated with a second slide-gate assembly.

The Manchester simulation testing apparatus was of great value in identifying technical problems associated with the adjustable slide gate and modifications needed for the separation-by-code computer program. For example, biologists working with the computer program indicated that the database capacity needed to be expanded from 20,000 to over one million tag codes, that the slide-gate opening should be controlled by the computer, and that the computer program should record the number of times the gate opens during a trial. These last two features and others are included in the electronic gate controller that is scheduled to be evaluated in 1994. The simulation testing apparatus will also be used to test whether using reverse wrappings of the coils, which theoretically would significantly reduce RF emissions, would affect the RE of a PIT-tag monitor.

Summary, Conclusions, and Recommendations

1. A prototype computer program that can separate tagged fish based on their specific PIT-tag codes was evaluated. Initially, the separation system was set up with the standard components (single-read firmware and a nonadjustable slide gate) used at the dams. With this setup, the computer program was tested by separating specific tag codes that represented three tag-code densities (20, 50 and 80%) within the population. Following these tests, two modifications to the separation system (an adjustable slide gate and double-read firmware) were evaluated with the same computer program.

2 To evaluate the separation-system setups, a testing apparatus that simulated a portion of a juvenile fish bypass/collection facility was constructed at Manchester Field Station.

3 Inconsistent PIT-tag reading efficiencies (REs) were a recurring problem until May 1993, when the problem was reduced by better securing the top of the monitor's RF shield.

4 The separation-by-code computer program performed well, proving that it was possible to separate tagged wooden sticks and fish based on their specific PIT-tag codes.

5 All of the REs and GEs were above 95% for the stick trials at each of the three tag-code densities (20, 50, and 80%) for all three setups of the separation system.

6 The adjustable slide gate had a tendency to open up more than its set distance if it was triggered by a second tag before it had completely closed. The larger openings resulted in a lower overall GE for the adjustable slide gate ($\bar{x}$ = 98.4%) than for the nonadjustable slide gate ($\bar{x}$ = 99.4%). Although the difference was small, it was significant ($P < 0.001$).

7. There was no significant difference in performance between single-read and double-read firmware at water velocities of 3 m/sec. The single-read firmware did generate some erroneous tag codes, while none were generated by the double-read firmware. These results favor replacing the single-read firmware with the double-read firmware, but we recommend that additional tests be conducted with fish at higher velocities before using double-read firmware in the Columbia River Basin.

8. In contrast to the stick trials, the average RE for fish trials was below the 95% acceptable rate. The REs ranged from 78 to

100% for the fish trials and averaged 92.3 ± 6.9%. The GEs were low, ranging from 63 to 92%, because fish, especially the larger ones, were observed swimming in the flume between the monitor and slide gate. These problems can be reduced by a) increasing the number of monitor coils from two to four, b) increasing the distance from the head tank to the first monitor coil, c) decreasing the distance from the last monitor coil to the slide gate, and d) increasing water velocity. These recommendations are not only applicable to the Manchester testing apparatus, but to present and future juvenile collection facilities within the Columbia River Basin.

Fixed-Reference Tag

The ability to determine the operational status of each excitation/detection coil of a PIT-tag interrogation system on a daily basis is important from a data integrity and systems reliability standpoint. NMFS Sand Point Electronics Shop personnel developed a fixed-reference tag that provides operational status information on an hourly basis. Each fixed-reference tag is attached to an excitation/detection coil, which supplies it with power. However, the fixed-reference tag operates independently and transmits a unique tag code. The transmitted code becomes part of the permanent computer file, which then provides a record if a problem were to occur. Prototype fixed-reference tags were successfully tested both in the NMFS Sand Point Electronics Shop and in the field. The tags are now being manufactured and will be installed into all of the permanent PIT-tag Columbia River Basin interrogation systems prior to the 1994 field season.

INVESTIGATIONS OF TAGGING EFFECTS

Vulnerability of Marked Steelhead to a Visually Hunting Predator in Clear Water

Introduction

Marking is a common strategy for identifying individual or groups of fish for research, and it is usually assumed that marked fish are representative of the population. This assumption is based on the belief that marking does not adversely affect fish. However, a number cf studies have shown that marked fish have long-term survival rates that are significantly lower than those of their unmarked cohorts (Saunders and Allen 1967, Bergman 1968, Lister et al. 1981, Berg and Berg 1990, Blankenship and Hanratty 1990, McFarlane and Beamish 1990). Thus, there is sufficient evidence to substantiate the assumption that fish can be affected by marking.

The relationship between marking and reduced survival may be explained by injury, infection, or increased susceptibility to predation caused by the marking process. Marking can increase vulnerability to predation by reducing growth, inducing trauma, altering behavior, or increasing conspicuousness. Bergman (1968), McFarlane and Beamish (1990), and Prentice et al. (1993) demonstrated that marking can reduce growth. Since there is a direct relationship between size and burst-swimming speed (Bainbridge 1960, Alexander 1970), any reduction in growth due to marking would be expected to constrain a fish's ability to escape predators.

Growth reduction can also prolong vulnerability to predation by increasing the time during which the fish fits within its predator's gape. Field and laboratory studies have shown that smaller fish are more vulnerable to predators, and once a specific size is reached, fish become invulnerable to certain size-classes of predators (Parker

1971, Patten 1977, Hargreaves and LeBrausser 1986, Post and Evans 1989).

By inducing trauma or stress, marking can reduce an animal's ability to detect and flee from predators. Sigismondi and Weber (1988) showed that handling stress alone reduced the response time for predator avoidance in chinook salmon. If the marking process induces abnormal schooling or swimming behavior, then marked fish may become more attractive to predators that use visual cues.

External marks such as fingerling tags, Carlin tags, and,freeze brands that are designed to be visually conspicuous to facilitate data recovery, may further attract predators. Endler (1983) demonstrated with guppies, and Zaret (1972) with daphnia, that visual conspicuousness of external morphology is directly related to predation. This may explain why Lawler and Smith (1963) found that conspicuously tagged perch (*Perca flavescens*) had lower survival than inconspicuously tagged perch.

To investigate whether marking trauma or mark conspicuousness increased predation on age-0 steelhead by age-2 steelhead, we tested the following three null hypotheses: 1) marked and unmarked fish are equally vulnerable to predation, 2) fish with all mark types are equally vulnerable to predation, and 3) fish with visually conspicuous (external) and inconspicuous (internal) marks are equally vulnerable to predation. We tested these hypotheses with steelhead in five treatments consisting of unmarked control fish, internally marked coded-wire (CW)-tagged fish (Jefferts et al. 1963), internally marked PIT-tagged fish (Prentice et al. 1990b), externally marked freeze-branded fish (Mighell 1969), and externally marked fingerling-tagged fish (Floy FT-69 tags).

Materials and Methods

This study was conducted in September and October 1990 at the NMFS Big Beef Creek Field Facility. Each week for 3 weeks, 240 age-0 steelhead were netted from a parent population, anesthetized in tricaine methanesulfonate (MS-222) and randomly assigned to one of five marking treatments: unmarked (controls), CW tagged, PIT tagged, freeze branded, or fingerling tagged. Fish were marked appropriately and their fork lengths measured to the nearest millimeter on an electronic digitizer board. Three fish from each treatment were then placed in 16 pails (20 L) for a total of 15 fish/pail and 16 replicates/week. Treatment fish were subsequently maintained until testing in the covered pails with a flow of denitrified and aerated, 10°C well water. Average fork length of age-0 steelhead prey was 68.7 ± 5.6 mm ($\bar{x}$ ± SD).

The 48 trials (16/week x 3 weeks) were conducted under natural daylight conditions in four dark-green 2.4-m diameter fiberglass tanks that held approximately 3,000 L. Tanks were supplied with clear, flowing, denitrified, and aerated well water at 10°C. Tests were initiated 3, 4, 5, or 6 days after marking by placing one age-2 steelhead predator in each tank. Thirty minutes later, the 15 age-0 prey steelhead from a single holding pail were poured into the tank and challenged to survive predation by the age-2 steelhead. After 24 hours, the predator and any remaining prey were removed and surviving prey were identified.

The eight predatory steelhead were proven cannibals in excellent condition, with fork lengths averaging 288 ± 14.3 mm. These predators were used an average of six times and were starved for at least 1 day before being reused in another trial.

Statistical comparisons between treatments were made with contingency table analysis, following the methods of Zar (1974) and Denenberg (1976) for count data. Significance was established at $P \leq 0.05$.

Results

The percentage of unmarked age-0 steelhead cannibalized was only about half that observed for each of the other four treatments. Significantly more marked (19.4 to 21.3%) than unmarked (10.4%) age-0 fish were eaten by predatory age-2 steelhead ($P = 0.01$) (Table 21). There was no significant difference in the number of fish eaten among the four individual mark types ($P = 0.982$).

When internal (PIT and CW tags) and external (fingerling tags and freeze brands) marks were compared to examine the effect of tag conspicuousness, there was no significant difference in the numbers of internally and externally marked fish consumed ($P = 0.916$). There was also no significant relationship between tagging treatment and number of days post-tagging on which a trial was conducted ($P = 0.898$).

Discussion

In the experiment, steelhead with internal and external marks were preyed on similarly, suggesting that mark conspicuousness is not crucial in the laboratory setting. However, as Lawler and Smith (1963) documented for perch, mark conspicuousness may be important under field conditions. The unnatural uniformly colored background, clear water, and unstructured habitat of our test tanks may have increased conspicuousness of the entire fish over that of the tag.

Since tag conspicuousness apparently did not affect prey survival in this study, some other aspect of antipredator behavior must have

Table 21. Summary results from 48 trials of marked and unmarked (control) age-0 steelhead challenged to survive predation by age-l steelhead in clear water.

	Treatment				
	Unmarked	CW tagged	PIT tagged	Fingerling tagged	Freeze branded
Number of fish tested	144.	142	141	144	144
Number of fish preyed on	15	28	30	29	28
Predation rate (%)	10.4	19.7	21.3	20.1	19.4

been reduced by marking. A common element in all four marking procedures was the tissue wounding induced by puncture during CW tagging, PIT tagging, and fingerling tagging, or by burning during freeze branding. It is possible that tissue trauma may have resulted in leaching of body chemicals having a predator-attracting odor. However, steelhead, like most other salmonids, are primarily visually-hunting predators (Fauch 1991). Therefore., we hypothesize that the physiological trauma associated with tagging induced changes in prey behavior (e.g., decreased predator awareness and escape velocities, abnormal swimming behavior, etc.) that increased their vulnerability to predators.

The observed increased predation on marked steelhead may help explain some of the decreases in post-release survival reported in numerous field studies. For instance, Saunders and Allen (1967) found that Atlantic salmon (*Salmo salar*) tagged with modified Carlin tags had a lower survival rate than their fin-clipped cohorts, and that the survival of both mark types was lower than that of unmarked fish. Similarly, outmigrating coho salmon (*Oncorhynchus kisutch*) that were trapped in a weir, CW tagged, and released were found to have survival rates 14 to 16% lower than unhandled controls (Lister et al. 1981, Blankenship and Hanratty 1990). Other studies with CW-tagged (Bergman 1968) and Carlin-tagged (Berg and Berg 1990) salmonids have similarly shown that both of these tag types reduced marine survival. This negative effect on survival of tagging is not limited to salmonids. McFarlane and Beamish (1990) found that anchor tags decreased the in situ survival of sablefish (*Anoplopoma fimbra*).

This study suggests that a primary mechanism affecting post-release survival of marked salmonids may be increased

vulnerability to predation due to changes in prey behavior. We believe the conservative approach is to assume that marking affects all aspects of fish biology until experimentally demonstrated otherwise. Mark and recapture experiments, as well as any experiments comparing tagged and untagged fish, must statistically correct or include adequate control groups (unhandled and untagged, handled and untagged) to accurately measure differences in survival between marked and unmarked cohorts. Otherwise, attributing characteristics observed in tagged fish to the main population, or to any untagged fish, may be misleading.

Summary, Conclusions, and Recommendations

1. We investigated whether marking trauma or mark conspicuousness increased predation on age-0 steelhead by age-2 steelhead in clear water.
2. Significantly more marked (19.4 to 21.3%) than unmarked (10.4%) age-0 fish were eaten by age-2 steelhead predators. Although steelhead are predators that use visual and not olfactory cues, fish with internal or external marks were preyed on in equal numbers. This suggested that mark conspicuousness is not crucial in the laboratory setting.
3. Our study suggested that a primary mechanism affecting post-release survival of marked fish may be increased vulnerability to predation due to changes in prey behavior.

Vulnerability of Marked Steelhead to Steelhead Predators in Tinted Water and Squawfish Predators in Clear Water

Introduction

Based on the results of the 1990 predation study, two experiments were initiated in 1991 to further examine the effects of tag-induced changes in prey behavior and tag conspicuousness on predation. These experiments were conducted using the same general approach as in the 1990 predation study, and the same five marking treatments: unmarked (controls), CW-tagged, PIT-tagged, freeze-branded, or fingerling-tagged steelhead. In one predation experiment, steelhead predator and prey were tested in tinted water. To test variation due to predator species, northern squawfish (*Ptychocheilus* oregonesis) were tested with steelhead prey in clear water.

Materials and Methods

Except for the following minor changes, the same equipment and procedures as described in the 1990 study were used (see page 92).

Steelhead in tinted water--Blue, 1.8-m-diameter tanks that held approximately 1,650 L were used instead of the larger (3,000 L) green tanks used in the 1990 study. To color the water, 21 g of humic acid were stirred into the tanks for 5 minutes before any fish were added. In order to maintain a constant tint, this experiment was run under static conditions. Eighty trials (16/week x 5 weeks) were conducted during April and May 1991 with the same steelhead predators used previously in the 1990 study. Over the 5 weeks, four trials had to be eliminated for different reasons.

Squawfish in clear water--The predators used in this experiment were northern squawfish. The number of tanks was increased from four to six. As above, the 1,650-L blue tanks were used, but here they

were supplied with clear, 10°C, flowing well water. Seventy-two trials (24/week x 3 weeks) were conducted during March 1992. Due to the overall low consumption of prey steelhead by the squawfish, the test procedure was changed in April. The numbers of predators and prey were increased from 1 to 6 and from 3 to 10, respectively. Two beige 4-m-diameter tanks that held approximately 12,500 L were used instead of the smaller tanks, and the trial duration was increased to 48 hours. Eight trials (8/week x 1 week) were conducted during the first week of April.

Predation data were analyzed using randomized block ANOVAs with each tank treated as a block. Significance was established at $P \leq 0.05$.

Results

Steelhead in tinted water--Average fork length of the age-0 steelhead prey was 83.5 ± 4.2 mm ($\bar{x}$ ± SD). The fork lengths of the age-2 steelhead predators were not measured; however, these were the same fish used in the 1990 experiment. In tinted water, there was not a significant difference between the percentages of marked (16.5 to 20.4%) and unmarked (18.8%) age-0 steelhead consumed ($P = 0.631$) (Table 22). When internal and external marks were compared to test the effect of tag conspicuousness on predation, there was no significant difference in the percentages of prey eaten ($P = 0.550$).

Scruawfish in clear water--Average fork length of the age-0 steelhead prey was 75.6 ± 5.9 mm. The squawfish varied widely in size, ranging from approximately 250 to 450 mm. At least half of the study squawfish were less than 350 mm. Overall predation rates were low whether one (1.0-3.5%) or six (6.3-12.5%) squawfish were used (Tables 23 and 24). There was no significant difference among the

Table 22. Summary results from 76 trials of marked and unmarked (control) age-0 steelhead challenged to survive predation by age-l steelhead in tinted water. Probability value is based on a randomized-block ANOVA.

	Treatment				
	Unmarked	CW tagged	PIT tagged	Fingerling tagged	Freeze branded
Number of fish tested	229	230	227	231	231
Number of fish preyed on	43	47	43	43	38
Predation rate (%)	18.8	20.4	18.1	18.6	16.5

$F_{(4,75)} = 0.645$ $P = 0.631$

Table 23. Summary results from 72 trials of marked and unmarked (control) age-0 steelhead challenged to survive predation by one northern squawfish in clear water. Probability value is based on a randomized-block ANOVA.

	Treatment				
	Unmarked	CW tagged	PIT tagged	Fingerling tagged	Freeze branded
Number of fish tested	288	288	287	288	288
Number of fish preyed on	7	9	3	7	10
Predation rate (%)	2.4	3.1	1.0	2.4	3.5

$F(4, 71) = 1.397$ $P = 0.235$

Table 24. Summary results from 8 trials of marked and unmarked (control) age-0 steelhead challenged to survive predation by six northern squawfish in clear water. Probability value is based on a randomized-block ANOVA.

	Treatment				
	Unmarked	CW tagged	PIT tagged	Fingerling tagged	Freeze branded
Number of fish tested	80	80	80	80	80
Number of fish preyed on	8	9	6	10	5
Predation rate (%)	10.0	11.3	7.5	12.5	6.3

$F_{(4,7)} = 0.664$ $P = 0.622$

percentages of marked and unmarked age-0 steelhead eaten by one (P = 0.235) or six squawfish (P = 0,622). Tag conspicuousness did not affect the percentage of prey eaten whether one (P = 0.344) or six (P = 1.000) predator squawfish were tested.

Discussion

Steelhead in tinted water--In tinted water, predation by steelhead on unmarked prey increased to the same level recorded for marked prey in both this experiment and in the 1990 clear-water experiment. This result suggested that the steelhead predators were unable to visually distinguish and target marked prey in the tinted water, but rather consumed fish as they randomly swam into them. It also reconfirmed the hypothesis that steelhead primarily use visual and not olfactory cues for locating and attacking prey (Fauch 1991). If steelhead predators were able to sense chemicals released from the marking lesion, then marked fish would be expected to be consumed at a higher rate than unmarked prey in the tinted water. Since this was not the case, these results support the previous hypothesis that visually hunting predators are attracted by a change in prey behavior induced by the physiological trauma of marking. Since clear water more closely resembles natural water than does tinted water in most cases (the Snake River is one exception), this probably helps explain the lower survival of marked fish reported in many field studies (Saunders and Allen 1967, Bergman 1968, Berg and Berg 1990, Blankenship and Hanratty 1990).

Sauawfish in clear water--Squawfish in clear water did not discriminate between marked and unmarked age-0 steelhead prey. They consumed prey differently than steelhead predators in clear water, but similar to steelhead predators in tinted water. However, in general,

the northern squawfish were less active predators than the age-2 steelhead. This might be explained by the low water temperature (10°C) and small size of several squawfish predators.

Examining the relationship between temperature and consumption rates for squawfish, Vigg and Burley (1991) determined squawfish consumed on average only one juvenile salmon per day until water temperatures rose above 15°C. Although squawfish start feeding on salmonids at 250 mm, fish do not become the predominant component of their diet until they reach 350 mm (Poe et al. 1991). It has also been observed that they appear to prefer moribund or stunned juvenile salmonids as prey (Donn Park, Biomark Inc., 3653 Rickenbacker, Suite 200, Boise, Idaho 83705, Pers. commun. March, 1992.). In contrast, we have observed steelhead predators shorter than 300 mm consuming numerous healthy juvenile salmonids in a few minutes in 10°C water. Thus, squawfish under these laboratory conditions were probably not the best choice as an alternative predator. Perhaps using warm-blooded predators (e.g., birds) that consume fish at high rates would have been a better choice. Piscivorous birds have been used successfully by others in juvenile salmonid predation experiments (e.g., Wood 1986, Donnelly and Whoriskey 1991).

Summary, Conclusions, and Recommendations

1. In tinted water, there was no significant difference between the percentages of marked (16.4 to 20.8%) and unmarked (18.8%) age-0 steelhead eaten by age-2 steelhead predators. This suggested that the steelhead predators were unable to visually distinguish and target marked prey in the tinted water, but rather that they consumed fish randomly, as they swam into them. The results suggested that water turbidity can play an important role in predation.
2. The squawfish predators ranged in size from 250 to 450 mm. Overall predation rates were low whether one (1.0-3.5%) or six (6.3-12.5%) squawfish were used. There was no significant difference between percentages of marked and unmarked age-0 steelhead eaten when one or six squawfish were used as predators in clear water.
3. Squawfish were less active predators than the steelhead in this study. Possible explanations for this observation include: a) the consumption rate of squawfish was depressed by low water temperatures, and b) salmon are not a predominant diet component for squawfish less than 350 mm in length.
4. In the future, piscivorous birds should be considered for the role of predator. Birds can consume juvenile salmon at high rates and have been successfully used by other investigators.

Comparative Overwinter Survival of Tagged and Untagged Juvenile Coho Salmon

Introduction

This study was conceptualized when data estimating overwinter (parr-to-smolt) survival rates from migrants trapped at weirs and from recovery of PIT-tagged salmonid migrants at Lower Granite Dam were presented at the 1989 Spring Chinook Salmon Workshop (Petrosky 1990). Overwinter survival rates from migrants trapped at weirs were approximately 30% for fish from the Salmon and Crooked Rivers (tributaries of the Snake River), but PIT-tagged smolts yielded only 2-4% recovery rates at Lower Granite Dam.

Some attendees questioned whether PIT tagging could be responsible for the surprisingly low numbers of wild salmonids interrogated at Lower Granite Dam. However, this large reduction in survival contrasted with the findings on PIT-tagged salmonids that were maintained in captivity through maturity: these studies showed similar or only slightly lower survival rates for PIT-tagged salmon compared to untagged salmon (Prentice et al. 1987, 1993). Studies with other tags have shown that capture and tagging generally reduced natural survival by 10-20% over the complete life cycle (Bergman 1968, Berg and Berg 1990, Blankenship and Hanratty 1990, McFarlane and Beamish 1990). Therefore, we hypothesized that the extremely low survival of wild juvenile PIT-tagged chinook salmon and steelhead from the Snake River and its tributaries might be due to either 1) natural low overwinter survival or 2) the manner in which the tagged fish were captured, held, and released rather than the application or presence of PIT tags.

A study was designed to test whether tagged juvenile fish had lower overwinter survival than untagged fish in a natural stream

habitat by determining how PIT tags, CW tags, visual-implant-fluorescent (VIF) tags, and select combinations of these tags affected overwinter survival, smolt migration, and growth of juvenile coho salmon. Secondary questions examined were 1) did double tagging affect fish more than single tagging and 2) did PIT tagging affect fish more than CW tagging. As in most field studies, it was assumed that differences in recovery represented differences in survival.

Materials and Methods

The study was conducted in Heins Creek near Bremerton, Washington (Fig. 13). The creek is a 3.4-km-long coastal stream that drains Alexander Lake into Gorst Creek, which then drains into Puget Sound. In its lowest reaches, natural and artificial barriers prevent anadromous fish from migrating upstream. Consequently, there were no coho or chinook salmon populations in the upper stream where the study was conducted. However, the stream and lake above the barriers contain good salmon rearing habitats as evidenced by the large population of nonanadromous cutthroat trout (*Oncorhynchus clarki*).

In December 1991, two juvenile collection weirs with traps were installed on Heins Creek (Fig. 13). The upstream weir was located approximately 1.1 km below the lake outlet (a small dam) and the downstream weir another 0.4 km below that. The weir traps captured all emigrating fish except for a l-week period (25 January-2 February) during a winter flood.

On 26 December 1991 and 23 January 1992, yearling coho salmon parr from the WDF Minter Creek Hatchery were trucked to the study site and maintained for l-2 days in a 2,000-L tank supplied with oxygen. The fish were randomly assigned to one of five treatments (untagged, PIT-tagged, CW-tagged, CW+VIF-tagged, and CW+PIT-tagged). The

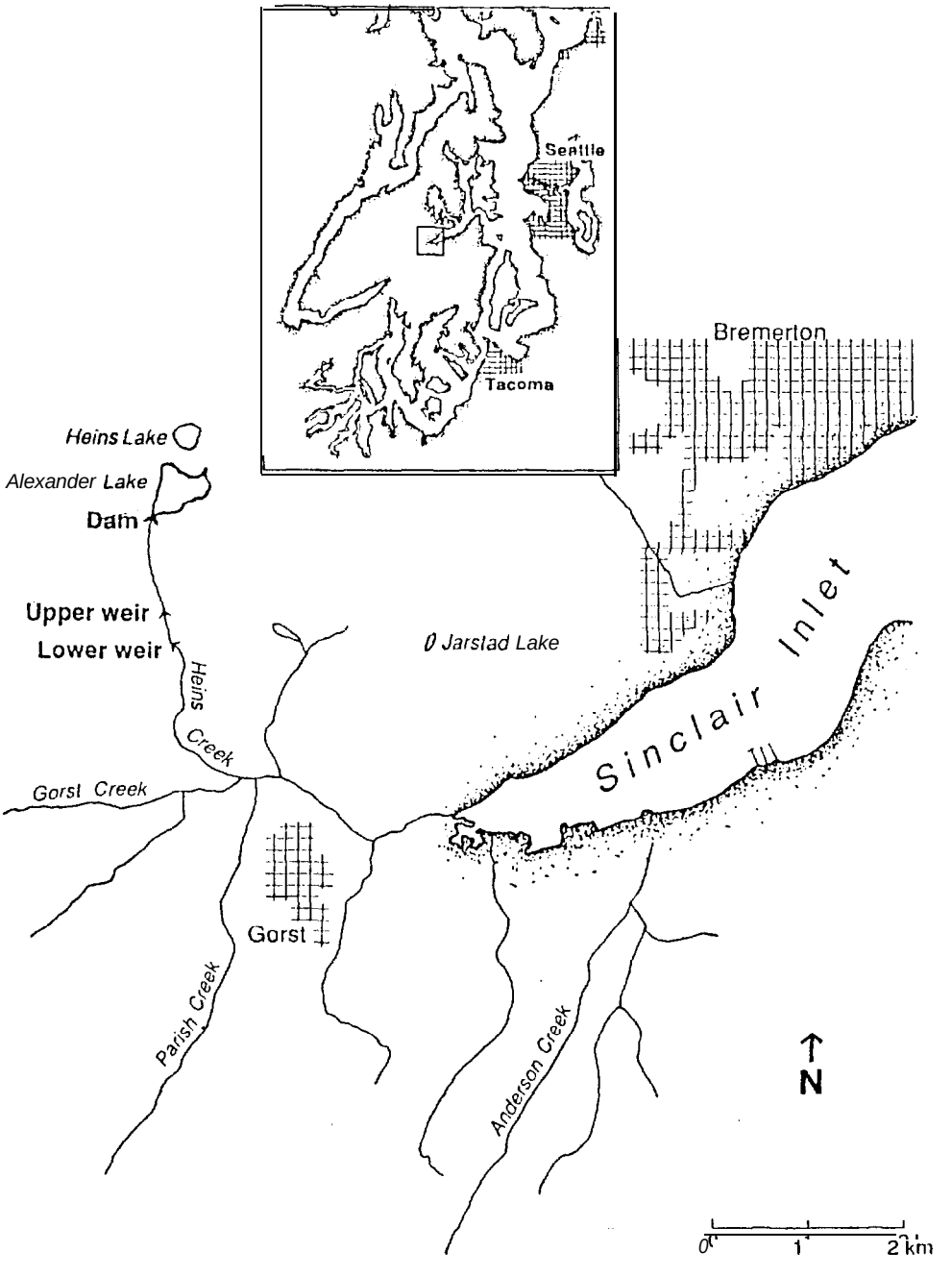

Figure 13. Map showing Alexander Lake, Heins Creek and locations of the two weirs.

2,500 fish obtained in December had their fork lengths measured to the nearest millimeter, were tagged appropriately, and then were released at two stream sites. The uppermost release site was located just below the dam, while the second site was about 0.25-km downstream from the dam. The 1,250 fish obtained in January were measured and tagged appropriately before being released into the lake. Combining the fish released in December and January, all five treatments were equally represented, with 250 fish/treatment being released at each site.

PIT-tagging procedure and electronic data entry techniques followed the methods described by Prentice et al. (1990a, 1990b). The CW-tagging procedure followed the methods described by Jefferts et al. (1963). The CW-tagged fish were adipose fin clipped so that they could be visually distinguished from untagged treatment fish. The fluorescent-orange-monofilament VIF tag was inserted into the adipose eyelid with a modified Mark IV CW-tagging machine (according to the protocol of the manufacturer, Northwest Marine Technology, Olympia, Washington).

Release sites were distinguished for the tagged fish by the individual codes of the PIT tags and sequential CW tags, and position of the VIF tags. Full-length VIF tags were inserted in the right adipose eyelid for the upper stream site and left eyelid for the lower stream site, and half-length tags were inserted in the right eyelid of lake-released fish. The manufacturer did not think the half-length tags would perform as well as the full-length tags in this size fish, so if necessary, the CW tag present in the CW+VIF-tagged fish was used to verify identification.

Relative overwinter survival of fish in each treatment was estimated by juvenile salmon recoveries at the lower trap during smolt

migration and by electrofishing surveys of the stream and lake in the summer. The two weir traps were checked once a day during the study. When fish were recaptured at the upper trap, their tag treatment was either identified visually (CW tagged, VIF tagged, or untagged) or electronically (PIT tagged). The fish were then released to continue downstream. Unfortunately, the hand-held PIT-tag scanner malfunctioned during the first week of smolt migration, and thus we had to rely on data from fish recovered and removed at the lower trap. Fish recovered at the lower trap were sacrificed and then taken back to the laboratory where fork lengths were measured to the nearest millimeter. They were then dissected to get positive identification of their treatments through tag decoding. Coho salmon that were not fin clipped and lacked PIT tags after dissection were considered to be untagged treatment fish.

In July 1992, after the smolt migration had ended, the stream above the lower weir was electrofished to recover any resident coho salmon. In August 1992, an electrofishing boat was used to recover a representative sample of coho salmon that had taken up residence in Alexander Lake. The boat made repeated passes until the surface of the lake had been fished three times.

Recovery data were analyzed with contingency table analyses (Zar 1974). Length data were analyzed with one-way ANOVAs and t-tests. An independent t-test was used to compare the migration times from the upper to lower trap for PIT-tagged and CW+PIT-tagged fish. Significance was established at $P \leq 0.05$. Significant F values were further analyzed with Tukey tests.

Results

When the fish were tagged, average fork lengths were not significantly different among the five treatments (P = 0.096) (Table 25). However, the second batch of fish that were released into the lake (109.7 ± 8.2 mm; $\bar{x}$ ± SD) was significantly smaller than those released into the upper (114.4 ± 10.7 mm) and lower (113.6 ± 10.2 mm) stream sites (F = 84.20; P < 0.001). Approximately 15% (n = 386) of the fish released at the two stream sites were captured at the lower trap within 2 weeks after they were released (Table 26). The five treatments (P = 0.122) and all sizes of fish (F = 1.29; P = 0.271) were equally represented among the fish captured at the weirs. There was little displacement (n = 4) of resident cutthroat trout after the study fish were added to the stream and no similar movement of study fish or displacement of trout after coho salmon were released into the lake. The juvenile coho salmon that left the study area during January were omitted from the recovery results as they did not experience overwinter conditions.

After overwintering in the study area, most of the study fish recovered were smolt migrants; only a few residents were recovered during electrofishing (Table 27). When electrofishing the stream, approximately 1,400 cutthroat trout were surveyed. In addition, 19 coho salmon that had established residence in the stream were recovered. The lake survey only recovered 10 coho salmon; however, there were a few deep sections in the lake where fish could have avoided being stunned by the electrofishing equipment.

Recovery rates for the five treatment groups ranged from 11.0 to 13.6% and were not statistically different (P = 0.577) (Table 27).

Table 25. Mean fork lengths (mm) of the coho salmon juveniles tagged in December 1991 and January 1992. Probability value is based on a one-way ANOVA.

	Untagged	CW tagged	PIT tagged	CW+VIF tagged	CW+PIT tagged
Fork lengths					
Mean	112.9	112.8	112.8	112.7	111.7
SD	(9.9)	(10.0)	(9.8)	(10.3)	(9.9)

$F(4, 3749) = 1.972 \quad P = 0.096$

Table 26. Summary of the number of coho salmon juveniles released, number captured at the lower weir during January 1992, and the number of smolts overwintering in Heins Creek, Washington. Probability value is based on contingency table analysis examining whether fish from all treatments were equally captured in January.

	Untagged	CW tagged	PIT tagged	CW+VIF tagged	CW+PIT tagged
Number released	754	752	746	751	751
Number captured during January	87	75	85	80	59
Number overwintering	667	677	661	671	692

All treatments: $\chi^2 = 7.27$ P = 0.122

Table 27. Smolt recovery results for coho salmon that overwintered in Heins Creek, Washington. Probability values are based on contingency table analyses.

	Untagged	CW tagged	PIT tagged	CW+VIF tagged	CW+PIT tagged
Number overwintering	667	677	661	671	692
Number recovered at lower weir	85	76	67	70	80
Number recovered electroshocking	6	5	7	4	7
Overall percent recovered	13.6	12.0	11.2	11.0	12.6

All treatments:	$\chi^2 = 2.89$	P = 0.577
Tagged vs. untagged:	$\chi^2 = 1.90$	P = 0.168
Single vs. double tagged:	$\chi^2 = 0.03$	P = 0.854
cw vs. PIT tagged:	$\chi^2 = 0.19$	P = 0.660

When the tagged treatment data were pooled, more untagged (13.6%) than tagged (11.7%) fish were recovered, but the difference was insignificant ($P = 0.168$). The recovery percentage of double-tagged fish (11.8%) was not significantly larger than that of single-tagged fish (11.6%) ($P = 0.854$). Recoveries of PIT-tagged (11.2%) and CW-tagged (12.0%) fish were not significantly different ($P = 0.660$). Significantly more fish were recovered from the lake release site ($n = 142$) than from either the upstream ($n = 91$) or downstream ($n = 82$) release sites ($\chi^2 = 19.95$; $P < 0.001$).

During smolt migration (27 March-l July), the average migration times for the five treatments were not significantly different from each other: they ranged from 113.1 calendar days for the CW+VIF-tagged fish to 116.7 calendar days for the CW+PIT-tagged fish ($F = 1.80$; $P = 0.128$) (Fig. 14). The CW+PIT-tagged smolts from all three release sites were consistently among the last of the four tagged groups to migrate. Lake smolts from the four tagged groups combined migrated on average significantly later ($\bar{x} = 118.2$ calendar days) than smolts migrating from the lower stream ($\bar{x} = 112.5$ calendar days) ($F = 7.73$; $P < 0.001$). The timing of the upper stream smolts ($\bar{x} = 115.5$ calendar days) overlapped with that of the two other groups. The PIT-tagged and CW+PIT-tagged fish averaged 3.8 days and 4.3 days, respectively, for migrating between the upper and lower weirs. A t-test indicated these times were not significantly different ($t = 0.570$; $P = 0.572$).

Mean fork lengths of the recovered fish among the five treatment groups ranged from 139.6 to 142.6 mm and were not significantly different ($P = 0.850$) (Table 28). Nor were there significant differences when the length data were pooled to test the experimental

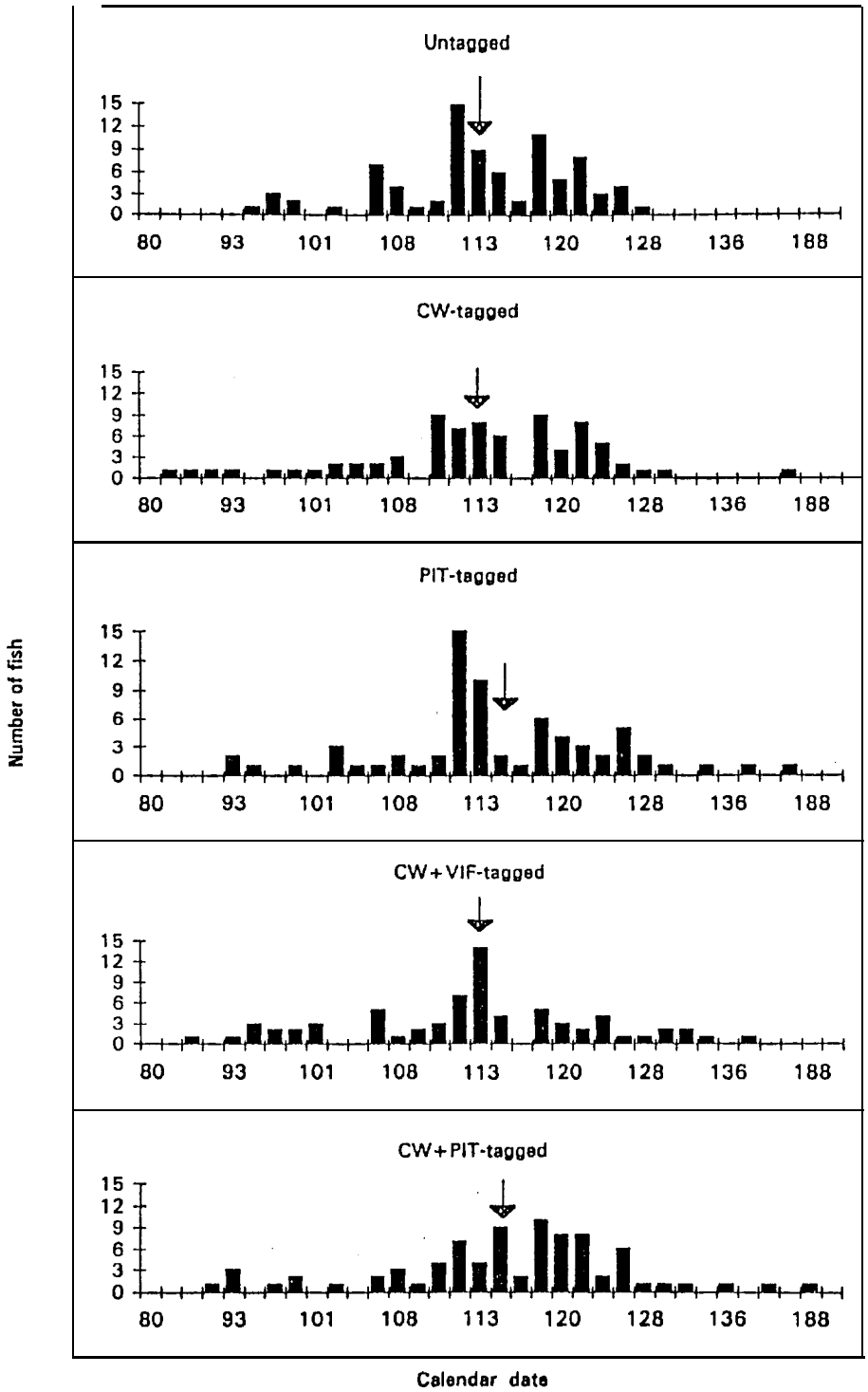

Figure 14. Smolt migration for the five treatment groups. Arrows indicate the mean migration time by calander date.

Table 28. Summary of fork-length (mm) data for the coho salmon smolts recovered at the lower weir. Probability values are based on ANOVAs and t tests.

	Mean fork length	Standard deviation
Untagged	142.4	(18.8)
CW-tagged	142.6	(19.0)
PIT-tagged	141.9	(19.0)
CW+VIF-tagged	141.7	(18.9)
CW+PIT-tagged	139.6	(18.9)
Tagged	141.4	(18.9)
Single-tagged	142.2	(18.9)
Double-tagged	140.6	(18.9)
Lake-released	150.8	(12.4)
Upper-stream-released	148.4	(12.4)
Lower-stream-released	117.6	(12.4)
All treatments:	F = 0.341	P = 0.850
Tagged vs. untagged:	t = 0.473	P = 0.637
Single vs. double tagged:	t = 0.773	P = 0,440
cw vs. PIT tagged:	t = 0.235	P = 0.815
Release site:	F = 207.924	P < 0.001

comparisons of tagged versus untagged fish ($P = 0.637$), single- versus double-tagged fish ($P = 0.440$) and PIT- versus CW-tagged fish ($P = 0.815$). Fish recovered from the lower-stream release site ($\bar{x} = 117.6$ mm) were significantly shorter than those recovered from the lake ($\bar{x} = 150.8$ mm) or upper-stream ($\bar{x} = 148.4$ mm) sites ($P < 0.001$).

The double-tagged groups yielded information on tag loss. Most of the tags lost were the half-length VIF tags ($n = 25$). Otherwise, there were 17 full-length VIF tags, 4 CW tags, and 1 PIT tag lost.

Discussion

The percentage of coho salmon recovered in this study (11.0-13.6%) was lower than anticipated (30%), based on reported parr-to-smolt survival for chinook salmon migrants trapped in river weirs as they left the upper Salmon River or Crooked River (Petrosky 1990) and the overwinter survival in nearby Big Beef Creek of PIT-tagged and CW-tagged coho salmon, which ranged from 22.6. to 41.8% in a 2-year study (Appendix A). Most likely a large number of coho salmon were carried below the smolt traps during the last week of January when two winter storms flooded the stream and enabled fish to bypass the traps. Other factors that could have contributed to the low recovery rates were natural mortality, inefficient electrofishing, and fish removal by vandals (this occurred at least once). Since absolute survival rates could not be determined, overwinter survival for tagged and untagged salmon was examined using relative recovery data.

PIT-tagged and CW-tagged fish had similar recovery rates in this study. Post-release recovery rates of PIT-tagged and CW-tagged fish were also similar to rates observed in studies conducted with coho salmon at Skagit Hatchery (see page 132) and Big Beef Creek

(Appendix A). Therefore, we concluded that PIT tags affect in situ survival no more than CW tags. In addition, there was no difference between the performances of single- and double-tagged fish.

The percentage of untagged coho salmon recovered was 13.6% and the percentage for PIT-tagged fish was 11.2%; this was a 17.7% relative reduction in apparent overwinter survival for PIT-tagged fish (Table 27). However, if the CW+PIT-tagged fish are included, the percentage of PIT-tagged fish recovered is 11.9% for an 12.5% reduction. Furthermore, since some of the untagged salmon recovered might have been single-tagged fish that lost their PIT tags, the difference in recovery rates might be even less than was apparent from the data. The 12.5-17.7% reduction in survival is similar to other comparisons (10-20%) between tagged and untagged wild or captive fish (Saunders and Allen 1967, Bergman 1968, Lister et al. 1981, Berg and Berg 1990, Blankenship and Hanratty 1990, McFarlane and Beamish 1990, Prentice et al. 1993). Thus, we conclude that tagging will generally reduce survival of salmon in the natural environment. However, these reduced survival levels (10-20%) are much smaller than the large decrease (from 30% to 2-4%) previously discussed. In that case, that decrease had been potentially attributed to PIT-tagging wild salmon in the Snake River tributaries (Petrosky 1990).

PIT tagging may be responsible for some of the reduction in survival of Snake River fish, but it appears that most of the observed low (2-4%) survival of PIT-tagged fish must either be due to the manner in which fish were captured and released or to natural mortality. Electrofishing, a common method used to collect wild Snake River salmon, is known to induce physiological stress and abnormal behavior, and sometimes to reduce survival (Schreck et al. 1976, Mesa

and Schreck 1989). Furthermore, Snake River fish are typically held only a short time (a few hours) after tagging before they are released back into the wild. Holding the fish for a few weeks after tagging can improve survival rates by around 10% (see pages 132,135). Although this study indicated a 12.5-17.7% difference between survival of PIT-tagged and untagged fish, harsher winter conditions are found in Snake River tributaries than in Heins Creek, and these harsh conditions may disproportionately reduce survival of PIT-tagged and untagged fish.

The later migration by lake smolts than by smolts initially released at the lower stream site may have simply reflected the difference in distance the two groups had to travel. The CW+PIT-tagged group was consistently the last group to migrate from all three sites. Since the difference was only a few days, this probably does not have any biological significance.

Heins Creek is a small creek and electrofishing revealed that it had a cutthroat population of approximately 1,400 fish. We added 2,500 fish to this creek, which might have exceeded the creek's carrying capacity. This may explain why 386 of the released fish were unable to establish themselves within the study area, but left it immediately (probably seeking homes farther downstream). Alexander Lake appeared to have a higher carrying capacity, as no study fish exited immediately after their release into the lake, and as the lake-released fish, which were originally significantly smaller, were larger than fish released into the creek at the end of the study. In addition, significantly higher numbers of tagged fish were recovered from the lake than from the stream.

The different tags appeared to function satisfactorily in this study. The high loss of VIF tags was primarily the result of our decision to use half-length tags to distinguish the lake-released fish, in spite of the manufacturer's advice not to use half-length tags in fish this size.

Summary, Conclusions, and Recommendations

1. This study tested whether tagged juvenile coho salmon had lower overwinter survival in a natural stream than untagged fish.
2. Juvenile coho salmon were randomly assigned to one of five treatments (untagged, PIT-tagged, CW-tagged, CW+VIF-tagged, and CW+PIT-tagged) and released into Alexander Lake and two sites in Heins Creek. Smolt traps were installed to capture emigrating fish. When the fish were tagged, average fork lengths were not significantly different among the five treatments. However, the group of fish released into the lake was significantly smaller than those released into the upper and lower stream sites.
3. Approximately 15% of the fish released at the two stream sites were captured at the traps within 2 weeks after they were released. Fish from all of the treatments and fish of all sizes were among these fish. These fish were not included in the return results, because they did not overwinter in the stream.
4. After overwintering, most of the study fish recovered were smolt migrants. Otherwise, only a few residents were recovered during electrofishing.
5. During smolt migration (27 March-l July), average migration times for the five treatments were not significantly different from each other.

6. The percentage of coho salmon recovered in this study was lower than the 30% we anticipated based on other studies. Recovery rates ranged from 11.0 to 13.6% for the five treatment groups and were not statistically different from each other. Most likely, a large number of coho salmon were carried past the smolt traps when two winter storms flooded the stream and enabled fish to bypass the traps.

7. There was a 12.5-17.7% relative reduction in apparent overwinter survival for the PIT-tagged group compared to the untagged group. Since recoveries of PIT- and CW-tagged fish were not significantly different, we concluded that any tagging will generally reduce survival of salmon in the natural environment.

8. Significantly more tagged fish were recovered from the lake release site (n = 142) than from either the upstream (n = 91) or downstream (n = 82) release sites.

9. Mean fork lengths of recovered fish were not significantly different among the five treatment groups. There were no significant differences when the length data were pooled at recovery to test the experimental comparisons of tagged versus untagged fish, single- versus double-tagged fish, and PIT- versus CW-tagged fish. However, significantly shorter fish were recovered from the lower-stream release site than from the lake or upper-stream sites.

10. The double-tagged groups yielded information on tag loss. Most of the tags lost were the half-length VIF tags (n = 25). Otherwise, there were 17 full-length VIF tags, 4 CW tags, and

1 PIT tag lost. The high loss of VIF tags was primarily the result our failure to heed the manufacturer's advice not to use half length tags in this size fish.

11. Because of the low overall recovery rates, we recommend that this study be repeated.

Comparison of Long-term Effects of PIT Tags and CW Tags on Coho salmon (*Oncorhynchus kisutch*)

Introduction

Long-term PIT-tag retention and the effects of PIT tags on growth and return rates of ocean-ranched salmon are unknown. However, this information is known for the older and commonly used binary CW tag (Bergman 1968). To compare the two tags, groups of coho salmon smolts were tagged with PIT tags, CW tags, or both, and their adult performances were monitored.

Current protocol for PIT tagging includes recording the fork lengths of all PIT-tagged fish using the electronic data entry system described by Prentice et al. (1990b). Since the additional handling associated with measuring may have a cumulative effect beyond that of tagging, this study also compared the growth and percent return of measured and unmeasured fish.

Materials and Methods

The study was conducted with 1987- and 1988-broodyear Clark Creek coho salmon reared at the WDF Skagit Hatchery near Marblemount, Washington. Coho salmon are released directly from this hatchery into Clark Creek in June as yearlings and return primarily as age-2 and age-3 adults from October through December.

In January 1989 and 1990, study fish (total = 38,633) were removed from the main population and transferred to a separate raceway. Fish were randomly assigned to three tagging groups: PIT-tagged only, CW-tagged only, and fish tagged with both tags (CW+PIT-tagged). To form the six treatments, each tagging group was subdivided into one group that was measured electronically and one

that was unmeasured (see Table 29). To produce the three tagging groups in 1989, the randomization procedure involved adding 600-800 fish simultaneously to a trough divided into two sections for PIT-tag and CW-tag groups as described by Prentice et al. (1993). This procedure was changed in 1990, when fewer fish were added simultaneously, and the trough was partitioned into three compartments (one for each tagging group).

Over 5 days, fish were tagged (also adipose fin-clipped if they received CW tags) and if appropriate, their fork lengths were electronically measured to the nearest millimeter. The tagging procedures followed the general methods outlined by Jefferts et al. (1963) and Prentice et al. (1990b). CW-tagged fish were measured before tagging and PIT-tagged fish after tagging. Fish receiving both tag types were measured between PIT-tag and CW-tag insertion.

After tagging, fish from all treatments were released into the same raceway to eliminate confounding the results by container effects. The fish were then reared in the raceway for several weeks before being recombined with the main hatchery population. Before being recombined, 1,000 adipose fin-clipped fish and 1,000 non-adipose fin-clipped fish were checked to determine if their tags were present and active. The fish were released as yearlings in June of the same year they were tagged and migrated to sea before returning to the hatchery as mature adults.

All coho salmon returning to Skagit Hatchery between 1989 and 1992 were interrogated for PIT tags. A prototype picket V-lead PIT-tag interrogation system (see pages 138-150), which monitored PIT-tagged fish as they entered the hatchery, was located above the fish ladder. No study fish returned during 1992. During the first

three years (1989-1991), all adult coho salmon killed for spawning were dropped through a chute that included a dual-coil PIT-tag monitor. If a PIT-tag code was recorded, the tag was removed from the fish. After spawning, all fin-clipped fish had their heads removed. Fin-clipped fish that also had active PIT tags (i.e., double-tagged fish) had their PIT-tag codes written on the head labels that accompanied the heads sent to WDF. At the lab, WDF detected and decoded CW tags. Tag code(s), length, gender, and recovery date were recorded for all tagged fish. In addition to the hatchery returns, surveys for PIT- or CW-tagged fish were conducted on several streams adjacent to or passing through the hatchery grounds in 1989, 1990, and 1991.

Tag loss for double-tagged adult fish was estimated using data from the PIT-tag monitor and WDF head analyses. If a fish was fin clipped but no CW tag was found in the head, then it was assumed the CW tag had been lost. When a CW tag was processed, its batch code indicated whether that fish should also have had a PIT tag. To determine if tag loss was gender specific, data from male and female fish were compared. It became obvious that some fish were losing their PIT tags after they had entered the hatchery, so in January 1991, the bottom of the adult pond was searched for lost PIT tags.

To determine if the randomization methods were effective, lengths at the time of tagging were analyzed using one-way ANOVAs. A Tukey test was run on any significant F values. Percent return data and the comparison between males and females for PIT-tag retention were analyzed using Chi-square analyses. Independent t-tests were used to compared lengths of PIT- and CW-tagged adult fish. Jacks wereexcluded from the length analyses. Significance was established at $P \leq 0.05$.

Results and Discussion

In 1989, the randomization procedure for creating the three tagging groups was ineffective, as the double-tagged or CW+PIT-tagged fish were significantly shorter than those with only a single tag ($P = 0.002$) (Table 29). The 1990 procedure was successful and randomized fish among the six treatment groups ($P = 0.337$). However, due to the ineffective randomization in 1989, we decided to eliminate the double-tagged fish from the treatment analysis and to use them only to evaluate tag loss in the returning fish.

Measuring the fish electronically did not appear to affect the long-term performance of PIT-tagged and CW-tagged fish. The percent return of measured single-tagged fish (1.32%) was not significantly higher than that of unmeasured fish (1.20%) ($P = 0.444$) (Table 30). There was also no significant difference between the average return lengths of measured (56.1 ± 5.9 cm; $\bar{x}$ ± SD) and unmeasured (55.0 ± 5.9 cm) single-tagged fish ($P = 0.105$) (Table 31). Therefore, we concluded that the additional time required to record the lengths of juvenile salmon while tagging them had no effect on either their long-term growth or survival. Since there was no difference between the measured and unmeasured fish, data for the subgroups were combined to compare the performance of PIT- and CW-tagged fish.

In 1989 and 1990, tag retention in the juveniles prior to release was excellent (99-100%) for both tag types several weeks after tagging. The CW-tag retention was high in spawning adults known to be tagged with both tags (98.4%). In contrast, functional PIT-tag retention was low in the double-tagged fish (68%). Combining the

Table 29. Mean fork length (mm) at tagging for the three measured treatments and number of fish released for each treatment. Probability values based on one-way ANOVAs with the 1989 groupings distinguished by Tukey analysis.

	Measured			Unmeasured		
	PIT tagged	cw tagged	CW+PIT tagged	PIT tagged	cw tagged	CW+PIT tagged
1989 release						
N released	3,218	3,232	3,215	3,217	3,216	3,218
Fork length						
Mean	104.9	105.2	104.5	N/A	N/A	N/A
SD	(7.2)	(7.0)	(7.4)	N/A	N/A	N/A
1990 release						
N released	3,223	3,219	3,219	3,218	3,218	3,220
Fork length						
Mean	105.1	105.0	104.9	N/A	N/A	N/A
SD	(6.9)	(6.9)	(7.1)	N/A	N/A	N/A
Total release	**6,441**	6,451	6,434	6,435	6,434	6,438

1989: $F(2, 9841) = 7.824$ $P = 0.002$

Groupings: PIT CW CW+PIT

1990: $F(2, 9903) = 1.237$ $P = 0.337$

Table 30. Number of fish recovered at the hatchery and percent return for each treatment. To compare percent returns for measured and unmeasured fish, the single-tagged groups were combined. Probability value is based on Chi-square analysis.

	Measured			Unmeasured		
	PIT tagged	cw tagged	CW+PIT tagged	PIT tagged	cw tagged	CW+PIT tagged
No. recovered	73	97	78	65	90	107
Percent return	1.13	1.50	1.21	1.01	1.40	1.66
Single-tag combined return	1.32			1.20		

$\chi^2 = 0.586$ P = 0.444

Table 31. Mean fork length (cm) at recovery for single-tagged treatment. To compare fork lengths for measured and unmeasured fish, the single-tagged groups were combined. Probability value is based on a t-test.

	Measured			Unmeasured		
	PIT tagged	cw tagged	CW+PIT tagged	PIT tagged	cw tagged	CW+PIT tagged
Fork length						
Mean	55.4	56.6	---	53.3	56.2	---
SD	(5.8)	(5.9)	---	(6.0)	(5.6)	---
Combined length						
Mean	56.1			55.0		
SD	(5.9)			(5.9)		

t = 1.628 P = 0.105

1990 and 1991 data, PIT-tag loss was significantly higher for females (47.9%) than for males (11.3%) (χ^2 = 17.78; P < 0.001). PIT-tag loss appeared to occur mostly when the broodstock were fully mature (Fig. 15). A few PIT tags were found in the muddy bottom of the adult holding pond when it was drained in January.

Similar low and sexually biased PIT-tag retention was observed in maturing Atlantic and sockeye salmon held in captivity (Prentice et al. 1993; Thomas Flagg, National Marine Fisheries Service, Manchester Field Station, Washington. P.O. Box 130, Manchester, WA 98353, Pers. commun. September, 1989). In captive salmonids, PIT tags have been observed extruding from the ovipositor, but never from the male genital pore. Unlike most fishes, female salmonids lack an oviduct to carry the eggs from the ovary to the exterior. Instead, the eggs fall directly into the body cavity before being expelled through the ovipositor. In ripe females, the PIT tags, which have been inserted into the body cavity when fish were young, appear to drift freely among the ripening eggs and ovarian fluid. In this condition, they are often expelled as irritants when they approach the ovipositors. In nonsalmonid fishes that possess oviducts, such as largemouth bass (*Micropterus salmoides*), there is no sexual bias in PIT-tag retention, and tags are retained after spawning (Harvey and Campbell 1989).

This tag loss in mature salmonids suggests PIT tags may not be suitable for applications where tag information on mature adults is critical, such as hatchery index marking or selective breeding programs. The use of PIT tags with adult salmonids should be limited to situations where tags are incorporated into jaw tags or inserted into the musculature rather than the body cavity. These limitations do not apply to nonsalmonid fishes that possess oviducts.

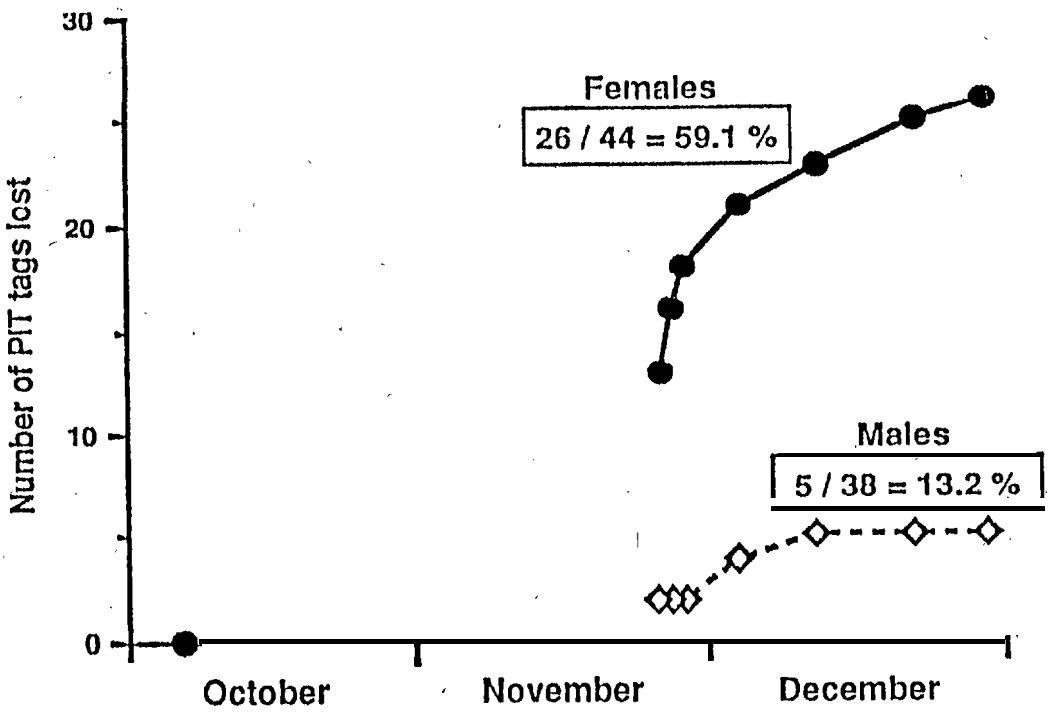

Figure 15. Cumulative PIT-tag loss over time for both females and males, 1990.

Based on the original (nonexpanded) data, significantly fewer PIT-tagged fish (1.07%) returned than their CW-tagged counterparts (1.45%) (P = 0.008) (Table 32 and Fig. 16). When the adult-return numbers were expanded to account for the large number of PIT tags lost and the small number of CW tags lost, the percent return for PIT-tagged fish (1.41%) was only slightly less than for CW-tagged fish (1.48%) and the difference was no longer significant (P = 0.643). These figures were similar to the overall hatchery return (1.48%) observed from the release of approximately 91,300 CW-tagged fish. These survival rates for PIT- and CW-tagged fish were consistent with our other studies comparing the survival of CW- and PIT-tagged fish challenged to survive predation (see pages 90-104), to survive through a winter in a stream (see pages 105-122 and Appendix A), or to survive in net-pens (Prentice et al. 1993). However, these data indicate only that PIT tagging does not affect post-release survival more than CW tagging.

Earlier studies have found that survival rates of CW-tagged salmonids were lower than those of their untagged counterparts (Bergman 1968, Lister et al. 1981, Blankenship and Hanratty 1990). Reduced survival of both PIT- and CW-tagged fish compared to untagged controls was also found in the aforementioned overwinter study and in one of the predation studies. Therefore, we anticipate that the survival of ocean-ranched PIT-tagged fish would also be lower than that of their untagged counterparts.

Extended periods for recovery after tagging appear to increase post-release survival. If fish are captured, tagged, and then released within a day after capture, survival typically is reduced by more than 10% through adulthood (Lister et al. 1981, Blankenship and

Table 32. Number of fish recovered at the hatchery and percent return for PIT-tagged and CW-tagged treatments. Numbers were expanded to account for lost tags. Probability values are based on Chi-square analyses.

	Nonexpanded		Expanded	
	PIT tagged	CW tagged	PIT tagged	CW tagged
No. recovered	138	187	181	191
Percent return	1.07	1.45	1.41	1.48
	χ^2 = 7.146 P = 0.008		χ^2 = 0.215 P = 0.643	

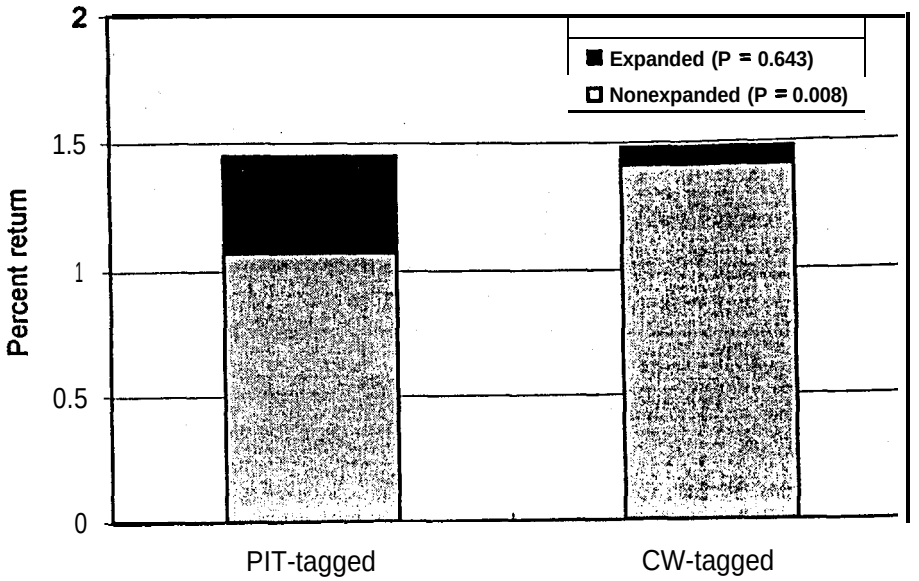

Figure 16. Expanded and nonexpanded return rates for the PIT- and CW-tagged groups.

Hanratty 1990). However, when fish are allowed to recover from tagging by being held in a hatchery for several weeks or more, we estimate that, similar to CW tagging (Bergman 1968), PIT tagging would reduce post-release survival by 5-10%. The difference is probably because fish held longer fully recover from marking and thus suffer less predation upon release (see discussion on pages 93-96).

Returning PIT-tagged coho salmon were significantly shorter (54.4 ± 5.9 cm) than their CW-tagged counterparts (56.4 ± 5.8 cm) ($P = 0.002$) (Table 33). This was similar to our findings with adult chinook salmon reared in net-pens, but not to findings with sockeye salmon reared in tanks (Prentice et al. 1993). Other studies have found that tagged fish (e.g., CW and anchor tags) grew more slowly than untagged fish (Bergman 1968, McFarlane and Beamish 1990). This potential for reduced growth of adult salmon PIT-tagged as juveniles needs to be examined more closely: reduced growth may affect successful propagation of a population, since smaller fish have lower fecundities.

Summary, Conclusions, and Recommendations

1. Tag retention, growth, and return rates to a hatchery were compared among CW-tagged, PIT-tagged, and CW+PIT-tagged coho salmon.
2. A total of 38,633 juvenile coho salmon were tagged with PIT tags, CW tags, or both over a 2-year period and released from the WDF Skagit Hatchery. At the time of tagging, half of the fish were measured electronically.
3. At the time of spawning, fish were interrogated for PIT and CW tags. The fork lengths of those fish having tags were also measured.

Table 33. Mean fork lengths (cm) at recovery for PIT-tagged and CW-tagged treatments. Probability value is based on a t-test.

	Nonexpanded	
	PIT tagged	CW tagged
Fork length		
Mean	54.4	56.4
SD	(5.9)	(5.8)

t = 3.055 P = 0.002

4. Measuring fish at the time of tagging did not affect the return rate or growth of tagged groups. We concluded that the electronic measuring method should continue to be used within the Columbia River Basin.
5. Prior to release, tag retention in the juveniles ranged from 99-100% for both tags.
6. In the spawning, double-tagged adults, CW-tag retention was 98.4%, and PIT-tag retention was 68%. Combining the 1990 and 1991 data, PIT-tag loss was significantly higher for females (47.9%) than for males (11.3%).
7. Direct evidence showed that PIT-tag loss occurred primarily during late maturation. We concluded from this finding that the PIT tag may not be satisfactory for tracking fish near maturation or for selecting brood stock from fish tagged in the body cavity as juveniles.
8. The hatchery return rate was not significantly different between PIT- and CW-tagged fish after expanding the data for tag loss.
9. Returning PIT-tagged fish were significantly shorter (2.0 cm difference) than their CW-tagged counterparts. This difference in growth did not appear to affect return rates, but we recommend that it be investigated more fully.

STUDIES ON INTERROGATION SYSTEMS FOR ADULT SALMON

PIT-tag Interrogation Systems for Adult Salmon: Effects of Picket V-leads, Supplemental Lighting, and Electromagnetic Fields on Fish Passage

Introduction

Early interrogation systems were designed only for juvenile salmon, however, PIT tags remain functional throughout the life of a fish (Prentice et al. 1990c). Therefore, we started to investigate the feasibility of developing interrogation systems to passively interrogate adult salmon returning to hatchery ponds, weirs, fish traps, or as they volitionally ascend a fish ladder. In 1988, NMFS began to develop a PIT-tag interrogation system to passively interrogate adult salmon enroute to hatchery return ponds. Preliminary tests conducted in November and December 1988 found that significantly more adult coho salmon passed through 91-cm wide by 240-cm long by 61-cm high channels (cross-sectional area = 5,551 cm^2) than through the narrower 30-cm (cross-sectional area = 1830 cm^2) and 15-cm (cross-sectional area = 915 cm^2) wide channels.

However, the available electronic equipment in 1988 could only produce effective EMFs in passageways with maximum cross-sectional areas of approximately 900 cm^2. Since we were limited by electronics, we tried other methods to improve fish passage through the narrow passageways of the PIT-tag monitors (e.g., picket V-leads and supplemental lighting). In the 1988 tests, adult salmon appeared to actively avoid covered, 15-cm- and 30-cm-wide passageways without supplemental lighting, and fish passage was significantly improved by adding picket V-leads to the ends of uncovered 15-cm channels.

In this study, we evaluated a prototype PIT-tag interrogation system that combined three single-coil PIT-tag monitors, each of which

had a picket V-lead attached at its passageway entrance. To improve the design of this interrogation system, we tested its components independently (e.g., picket V-leads and 400-kHz EMF).

Materials and Methods

Testing setup--This study was conducted during 1989 in the adult return pond of the WDF Skagit Hatchery (Fig. 17). The pond is divided into a narrow central channel and two large wing channels. We installed a pair of aluminum flumes (370-cm long by 91-cm wide by 61-cm high; cross-sectional area = 5,551 cm^2) side-by-side in the lower end of central channel such that all returning fish had to pass through them to enter the return pond (Figs. 17 and 18). Both the test and control flumes were painted flat black, and two sets of fluorescent lights were attached to a cover that could be placed over the test flume. In addition, three picket V-leads could be placed inside the test flume. The picket V-leads were constructed from black plastic pipe (3.8 cm inside diameter) and measured 61-cm long by 61-cm high. The openings were 15-cm wide at their narrow ends and 91-cm wide at their wide ends (Fig. 18).

The PIT-tag interrogation system for adult salmon consisted of three single-coil PIT-tag monitors placed in the test flume (Figs. 17 and 18). To determine if passageway length affected fish passage, we evaluated two three-monitor sets: one with 23-cm long passageways, and one with 30-cm long passageways. Each monitor passageway measured 15-cm wide by 61-cm high (cross-sectional area = 915 cm^2) and was constructed from clear acrylic. A monitor was attached at the upstream end of each picket V-lead. The effect of a 400-kHz EMF on fish passage was only tested with the longer of the two passageway lengths.

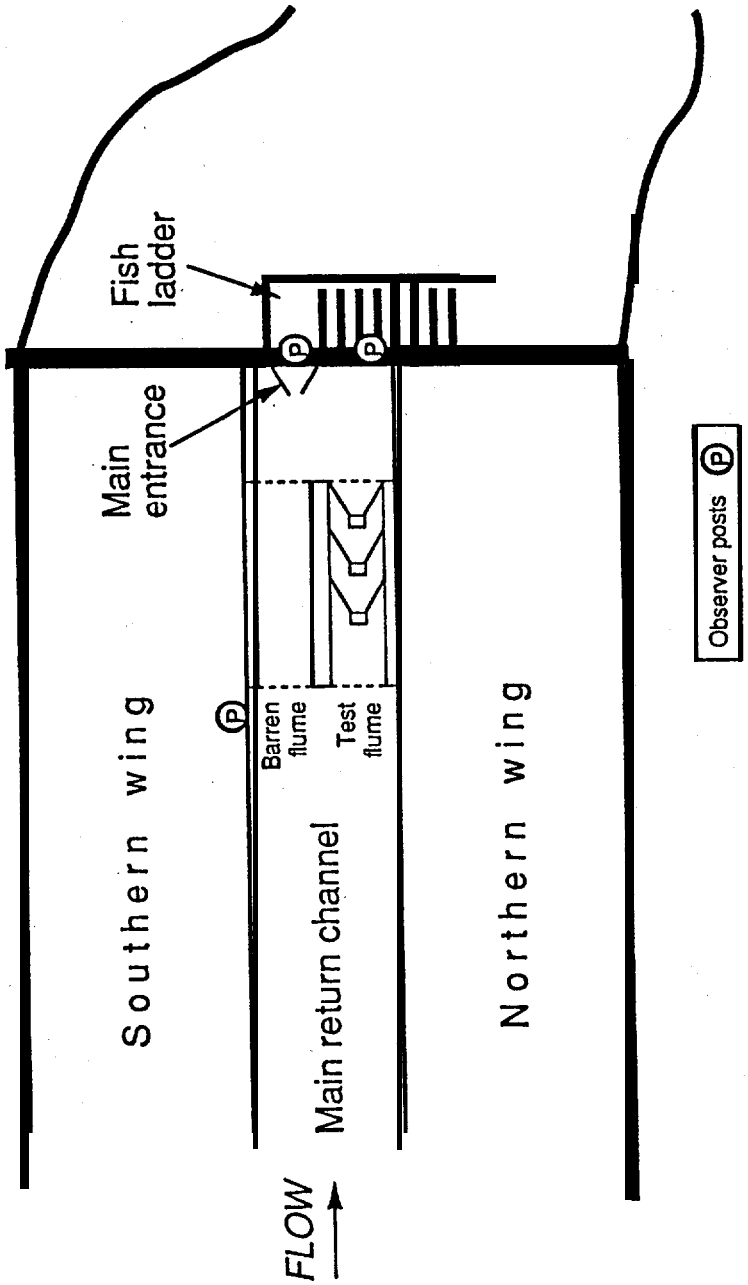

Figure 17. Return area for adult salmon at Skagit Hatchery, 1989. The circled Ps indicate where the observers stood. The test flume is depicted with an entire prototype picket V-lead interrogation system (three picket V-leads and three PIT-tag monitors) inserted.

TOP VIEW

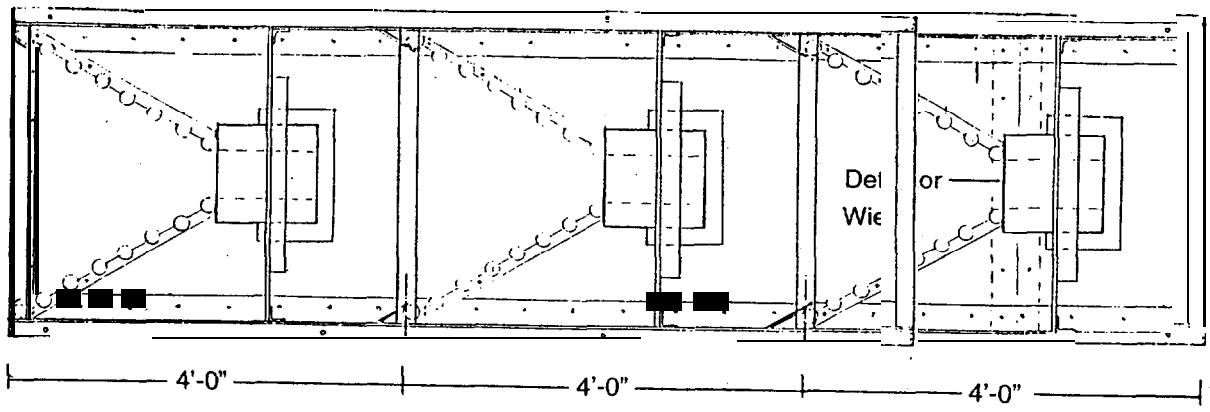

END VIEW

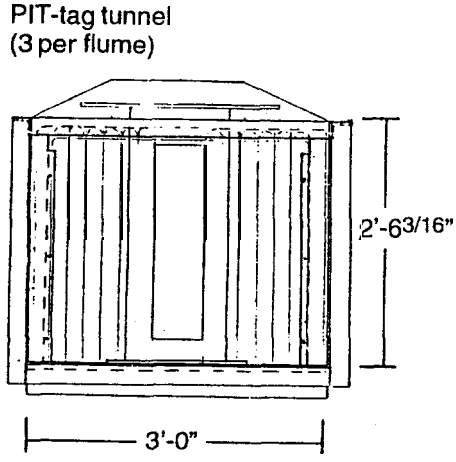

TOP VIEW DETAIL

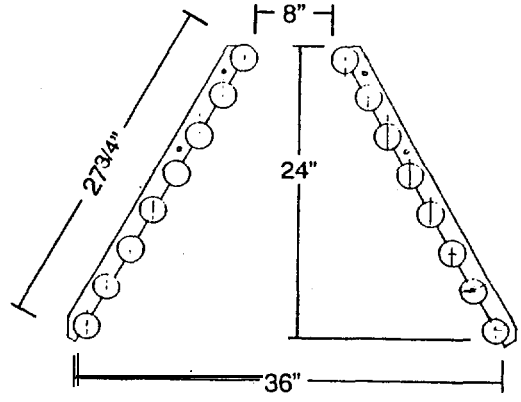

Figure 18. Top and end views of the prototype picket V-lead interrogation system. Also a top view of a picket V-lead.

Choice tests--Chinook and coho salmon naturally returning during October and November 1989 were used in this study. One flume was maintained as a barren control during all test runs, while the other flume was used to evaluate the following seven passageway treatments: 1) a 91-cm-wide barren flume (BAR), 2) a 91-cm-wide barren flume that was covered and illuminated (BCI), 3) a 91-cm-wide barren flume that was covered and not illuminated (BCN), 4) three 15-cm-wide picket V-leads that were covered and illuminated (VCI), 5) three monitors with 23-cm-long by 15-cm-wide passageways and three 15-cm-wide picket V-leads that were covered and illuminated with the EMF absent (23VCIA), 6) three monitors with 30-cm-long by 15-cm-wide passageway and three 15-cm-wide picket V-leads that were covered and illuminated with the EMF absent (30VCIA), and 7) three monitors with 30-cm-long by 15-cm-wide passageway and three 15-cm-wide picket V-leads that were covered and illuminated with the 400-kHz EMF present (30VCIP) (Fig. 19). On any given day, all seven treatments were evaluated, and the daily treatment schedule was varied to eliminate time of day as a confounding variable.

Three observers were responsible for counting fish moving upstream through the hatchery's main entrance and the two flumes during each trial (Fig. 17). On each day, three consecutive 10-minute trials were conducted for each treatment. If biologists had to enter the channel to change the passageway setup for the next trial, then the start of that trial was delayed for 15 minutes. Observers only scored fish that swam through the most downstream picket V-lead. Fish moving into the flume but not past this mark were not counted. Some fish were counted twice when they went back down the flume and remigrated up.

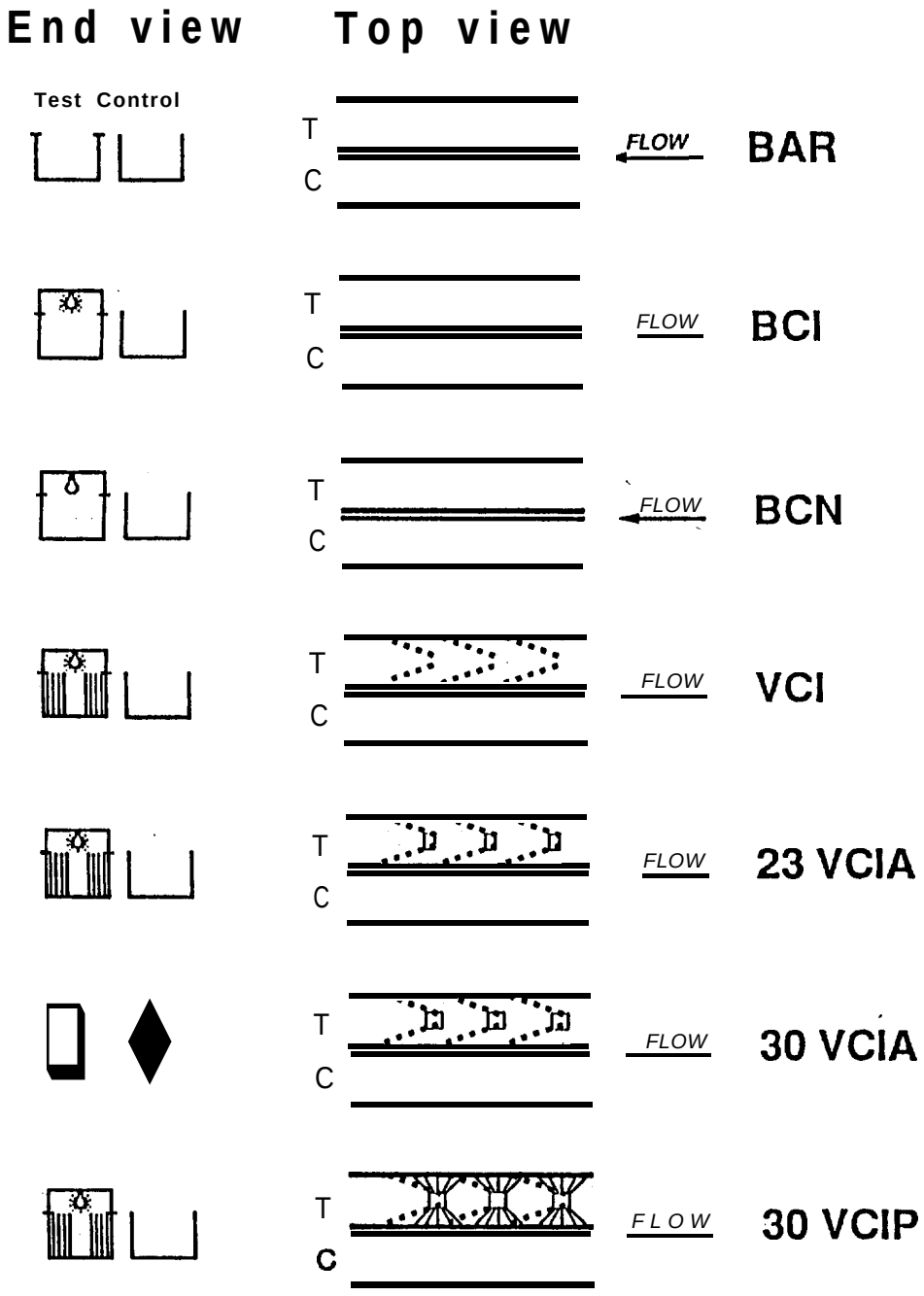

Figure 19. Top and end views of the seven passageway treatments. See text for complete description of the abbreviations.

Statistics--If no fish swam through either flume during a 10-minute trial, a percentage could not be generated and thus the trial was not included in the data analyses. Chi-square analyses on the data for the two barren flumes were used to determine if these salmon exhibited side preferences. One-way ANOVAs were applied to the percentages of chinook or coho salmon that swam through the test flume for the seven passageway treatments. Significance was established at $P \leq 0.05$. Significant F values were further analyzed with Tukey tests.

Results'

Choice tests--Over 5 days of chinook salmon trials, 488 fish migrated upstream through the paired flumes. The chinook salmon did not exhibit a side preference for either flume ($\chi^2 = 3.13$; $P = 0.075$). Mean percentages of chinook salmon migrating through the test flume differed significantly among the seven treatments ($P < 0.001$) (Table 34). A Tukey test identified two groupings: 1) BAR, BCI, and BCN and 2) VCI, 23VCIA, 30VCIA, and 30VCIP. More fish moved through the first set of treatment groupings (38.0-58.9%) than through the second set of treatments (6.3-23.0%). Physically, these two groupings were distinguished by the first grouping having 91-cm passageway widths and the second grouping having only 15-cm passageway widths. These narrow passage widths were produced by the use of triple picket V-leads or combinations of picket V-leads and PIT-tag monitors. Although not statistically significant, there was approximately an 18% reduction in chinook salmon passage when the barren flume was unlit, a reduction not observed when the barren flume was artificially illuminated.

Table 34. Percentage of chinook salmon choosing passage through the seven passageway treatments. Probability value based on a one-way ANOVA with groupings distinguished by Tukey analysis. For full explanation of abbreviations, see Figure 19.

	Passaueway treatment						
	BAR	BCI	BCN	VCI	23VCIA	30VCIA	30VCIP
Replicates	12	11	11	8	8	12	12
Percentage of fish completing passage							
Mean	56.9	58.9	38.0	6.3	9.6	14.2	23.0
SD	(18.5)	(33.5)	(32.2)	(17.7)	(17.4)	(16.5)	(17.2)

F (6, 67) = 9.291 P < 0.001

Groupings: BAR BCI BCN VCI 23VCIA 30VCIA 30VCIP

Over 10 days of coho salmon trials, 3,711 fish migrated upstream through the paired flumes. The coho salmon exhibited a side preference for the barren test flume (55.0%) over the barren control flume (45.0%) (χ^2 = 13.32; P < 0.001). The mean percentage of coho salmon choosing passage through the test flume was also significantly different among the seven passageway treatments (P < 0.001) (Table 35). A Tukey test identified two distinct groupings: 1) BAR and BCI and 2) BCN, VCI, 23VCIA, 30VCIA, and 30VCIP. More fish moved through the first set of treatments (51.2-63.1%) than through the second set of treatments (13.7-26.9%). The first grouping (BAR and BCI) was physically distinguished by a barren passageway that was lit either naturally or artificially. The second grouping (BCN, VCI, 23VCIA, 30VCIA, and 30VCIP) was distinguished by the non-illuminated passageway or by a narrow, 15-cm passage opening caused by the picket V-leads and monitors. In contrast to the chinook salmon results, the larger coho salmon data set enabled the large decrease in fish passage (25%) when the barren channel was unlit to be separated from the naturally- and artificially-lit barren treatments.

Observations--Fish passage behavior was changed by the presence of the interrogation system. On some days, large numbers of fish exited the pond through the hatchery main entrance. At these times, more fish moved downstream than upstream through the barren control flume. The triple picket V-leads in the test flume appeared to discourage downstream movement, as even with so many fish exiting, more fish would move upstream than downstream through the test flume.

Biologists observed large chinook salmon having difficulty passing through the 15-cm-wide ends of the picket V-leads and the passageways of the PIT-tag monitors. At least one large male chinook

Table 35. Percentage of coho salmon choosing passage through the seven passageway treatments. Probability value based on a one-way ANOVA with groupings distinguished by Tukey analysis. For full explanation of abbreviations, see Figure 19.

	Passaaewav treatment						
	BAR	BCI	BCN	VCI	23VCIA	30VCIA	30VCIP
Replicates	27	25	24	25	28	21	22
Percentage of fish completing passage							
Mean	51.2	63.1	26.1	22.9	13.7	15.0	26.9
SD	(32.4)	(33.2)	(30.1)	(29.3)	(13.6)	(13.9)	(33.9)

F (6, 165) = 11.398 P < 0.001

Groupings: BAR BCI BCN VCI 23VCIA 30VCIA 30VCIP

salmon became trapped in the narrow end of a picket V-lead, and one female may have been temporarily stuck in one of the monitors. Several large chinook corpses that drifted down the main channel were also caught among the narrow passageways of the picket V-leads. We subsequently dropped a large dead chinook salmon through a 15-cm monitor passageway and observed a snug fit.

There was no evidence that any coho salmon became mechanically wedged or trapped in either the picket V-leads or the monitor passageways. However, some coho salmon took up residence in the flumes where males were observed aggressively interacting with other fish and several females exhibited digging behavior. The other notable difference between the two species was the tendency of coho salmon to congregate just beyond the last monitor in the upstream section of the flumes.

Discussion

Similar to the studies on designing PIT-tag monitors for juveniles (Prentice et al. 1993, see pages 30-54), results demonstrated that supplemental lighting is necessary, as more fish of both species swam through the artificially illuminated, covered test flume than through the unlit covered flume. Also, since significantly more fish of both species swam through the 91-cm-wide channels, it was apparent that fish passage would be more natural if the electronics permitted larger passageways within PIT-tag monitors. In addition, increasing the width of the monitors to at least 20 cm would probably eliminate passage problems for large chinook salmon.

Results of this study also indicated that neither the passageway length nor the 400-kHz EMF within the monitor affected fish passage. Although none of the studies (Prentice et. al 1993, see pages 44 and

192) has indicated any change in the behavior of fish due to the presence of the 400-kHz EMF, NMFS biologists are concerned that prolonged EMF exposure may affect succeeding generations. Placing a picket V-lead on the upstream side of the last monitor might prevent coho salmon from congregating there and would thereby reduce their exposure to the 400-kHz EMF. Passageway length was probably insignificant because the supplemental lighting was sufficient for the salmon to determine that there were no predators or barriers in the PIT-tag monitors.

Summary, Conclusions, and Recommendations

1. This study evaluated a prototype PIT-tag interrogation system that combined three single-coil PIT-tag monitors, each of which had a picket V-lead attached to its passageway entrance. To improve the design of this adult interrogation system, its components (e.g., picket V-leads and supplemental lighting) were evaluated independently.
2. Fish passage was examined through the following seven passageway treatments: a) a 91-cm-wide barren flume (BAR), b) a 91-cm-wide barren flume that was covered and illuminated (BCI), c) a 91-cm-wide barren flume that was covered and not illuminated (BCN), d) three 15-cm-wide picket V-leads that were covered and illuminated (VCI), e) three monitors with 23-cm-long by 15-cm-wide passageways and three 15-cm-wide picket V-leads that were covered and illuminated with the EMF absent (23VCIA), f) three monitors with 30-cm-long by 15-cm-wide passageway and three 15-cm-wide picket V-leads that were covered and illuminated with the EMF absent (30VCIA), and g) three monitors with

30-cm-long by 15-cm-wide passageway and three 15-cm-wide picket V-leads that were covered and illuminated with the 400-kHz EMF present (30VCIP).

3. Coho salmon, but not chinook salmon, showed a side preference for one flume; however, statistical analysis of the results compensated for any side-preference bias.
4. The percentages of chinook and coho salmon migrating through the test flume were significantly reduced when the flume passage width was reduced from 91 cm to 15 cm using triple picket V-leads or a combination of picket V-leads and PIT-tag monitors.
5. Neither the passageway length nor the 400-kHz EMF within the monitor affected fish passage.
6. More fish of both species swam through the artificially illuminated, covered flume than through the unlit covered flume. Consequently, we recommend that all covered PIT-tag passageways for adult salmon be equipped with lights that operate during daylight hours to enhance the volitional passage of adult salmon.

PIT-tag Interrogation Systems for Adult Salmon: Electromagnetic Field Exposure

Introduction

While monitoring the return of study coho salmon at the WDF Skagit Hatchery (see pages 138-150), biologists noticed that some salmon did not swim directly through the picket V-lead interrogation system, but instead remained inside the system for long lengths of time (> 60 minutes). Within the PIT-tag monitors, fish would be exposed to 400-kHz EMFs. The calculated field strength at the centers of the passageways was approximately 125 A/m, which is substantially higher than the 1.6 A/m permitted under the 1982 American National Standards Institute (ANSI) standards. Tests were conducted over 2 years to measure the length of time returning adult coho salmon were exposed to the 400-kHz EMF within the picket V-lead interrogation system. Coho salmon naturally returning to the Skagit Hatchery were used in this study.

Materials and Methods

1989--Eight naturally returning adult coho salmon (none were PIT tagged) were timed between 20 November and 1 December 1989. During these tests, the three 30-cm-long by 15-cm-wide by 61-cm-high (cross-sectional area = 915 cm^2) PIT-tag monitors were placed in the test flume, and the three 23-cm-long PIT-tag monitors were placed in the control flume. The monitors had active 400-kHz EMFs during the passage of six of the fish and had no EMF during passage of the other two. Observers were posted so that they could time fish entering and exiting both flumes. Time was started when a fish entered the downstream entrance of a first monitor and stopped when the fish exited the upstream or downstream ends of either flume (elapsed time =

exposure time). Average times for the EMF-exposed and unexposed fish were compared with an independent t-test.

1990--Before the start of the 1990 field season, Destron/IDI and the NMFS Sand Point Electronics Shop improved the reading range of the PIT-tag equipment. This permitted widening the PIT-tag monitors for this experiment. For all six monitors, the new dimensions were 23-cm long by 20-cm wide by 61-cm high (cross-sectional area = 1220 cm^2). Two tests were conducted between 26 and 31 December 1990.

Prior to each test, we removed all coho salmon in the study area by placing a gate across the pond entrance above the fish ladder and then seining fish out of the channel (see Fig. 17). For Test A, 85 returning adult males were captured with a dip net from the main pond. They were anesthetized with MS-222 and then dropped through a chute that included a dual-coil PIT-tag monitor, and any PIT-tagged fish were eliminated from the study. The remaining fish were tagged in the abdominal cavity with PIT tags (Prentice et al. 1990b) and behind the dorsal fin with individually numbered anchor tags.

Fish were then released into the lower channel area, where a temporary barrier across the front of the two flumes prevented passage until they had fully recovered from the anesthesia. The PIT-tag monitors were turned on and then the barrier was removed. Consequently, passage time within the 400-kHz EMF could be electronically recorded for each PIT-tagged fish by subtracting the time recorded at the first monitor from the time at the third monitor. In addition, the RE of each PIT-tag monitor and the entire interrogation system could be assessed. In Test B, the process was repeated with 40 of the above 85 fish.

Results

1989--The six EMF-exposed coho salmon spent 2.3 ± 2.9 ($\bar{x}$ ± SD) minutes on average within the 400-kHz EMF (Table 36). The range was from 10 seconds to 8 minutes and 23 seconds. The two unexposed coho salmon, timed when the PIT-tag monitors were inactive, spent 0.9 ± 0.6 minutes on average within the area that would have had an EMF if the monitors had been active. These two averages were not significantly different (P = 0.342). None of these coho salmon congregated just beyond the last monitor as they had during the evaluation of the picket V-lead interrogation system (see page 148). During that evaluation, fish were often exposed to the 400-kHz EMF for over 1 hour.

1990--Of the 85 coho salmon used in Test A, 12 fish escaped from the study area entirely, and 4 fish died before entering either flume. Two fish died after going through the interrogation system. Of the 69 fish that went through either of the flumes, 66 were read by all 3 PIT-tag monitors, and 3 fish were read by 2 monitors. The RE for the entire interrogation system was 100%, and it was > 95% for each single coil monitor. Average exposure time was 30.9 ± 107.4 minutes, with 8.8% of the fish being exposed for longer than 55 minutes. One fish was exposed for 13 hours.

No fish escaped during Test B, but one fish died before entering either flume. Of the 39 fish, 33 were read by all 3 PIT-tag monitors, and 6 fish were read by 2 monitors. As in Test A, the RE of the interrogation system was 100%. Average exposure time was 16.1 ± 31.7 minutes, with 8.2% of the fish being exposed for longer than 55 minutes.

Table 36. Mean passage time of adult coho salmon migrating through the picket V-lead PIT-tag interrogation system in 1989. Probability value is based on a t-test.

	Active EMF	Inactive EMF
No. fish	6	2
Passage time in minutes		
Mean	2.3	0.9
SD	(2.9)	(0.6)
	t = 1.05	P = 0.342

Discussion

Similar to the previous finding during the evaluation of the picket V-lead interrogation system, in which the 400-kHz EMF did not affect the percentage of fish swimming through the picket V-lead interrogation system (see page 148), the 1989 results indicated the EMF did not affect passage time. The average EMF-exposure times in 1990 were much longer than the average exposure time in 1989, despite the' larger passageways (1220 vs. 915 cm"). The difference in exposure times between the 2 years was probably related to differences in water turbidity.

In 1989, exposure times were measured 'during a period of high water turbidity; under this condition, salmon tend to swim quickly. Earlier in the year, under lower water turbidity, adult coho salmon were commonly observed remaining in the interrogation system for over 1 hour. During the 1990 tests, water turbidity was low. Furthermore, the 1990 test fish may have been slowed down by the handling and anesthesia. The 1990 test fish had highly, developed secondary sexual characteristics (e.g., hooked noses or kypes), and therefore we assumed that the seven deaths were due to natural causes and not from tagging.

The individual records show that most fish swam directly through either of the two flumes, However, fish that remained in the 400-kHz EMF for hours caused concern among researchers because studies with other organisms have shown both lower and higher frequency fields may cause detrimental biological changes (Aldrich and Easterly 1987, Brown and Chattopadhyay 1988). This concern was the force behind initiating the following two studies to investigate whether prolonged exposure to 400-kHz EMFs affects fish biology..

Summary, Conclusions, and Recommendations

1. Strong EMFs are generated within PIT-tag monitors. A study was conducted to measure the time adult salmon were exposed to the 400-kHz EMF in the prototype picket V-lead adult salmon interrogation system.
2. In 1989, average exposure time to the EMF within the picket V-lead interrogation system was 2.3 minutes for the six coho salmon tested.
3. In 1990, average exposure time for Test A, which used 85 coho salmon, was 30.9 minutes: 8.8% of the fish were exposed for longer than 55 minutes,, and one fish was exposed for 13 hours. In Test B, which used.40 coho salmon, average exposure time was 16.1 minutes, with 8.2% of the fish being exposed for longer than 55 minutes.
4. Faster passage through the interrogation system occurred during periods of high water turbidity.
5. Reading efficiencies were above 95% for the PIT-tag interrogation system during the 2-year study.
6. The effect on fish of prolonged exposure to the EMF generated by the interrogation system is unknown. However, based on the exposures observed in our research, two studies to investigate potential effects on fish from 24-hour exposures to 400-kHz EMFs were initiated.

Electromagnetic Field Effects on Reproducing Fish: Medaka *(Oryzias latipes)*

Introduction

PIT-tag interrogation systems that monitor juvenile and adult salmon in rivers, streams, and at the Columbia River Basin dams are an integral part of the PIT-tag program. PIT-tag monitors currently operate at 400 kHz, but most likely an alternative operating frequency band, between 120 and 135 kHz (see pages 184-199), will be used in the future. Regardless of the operating frequency, test data show that a strong EMF is generated within a PIT-tag monitor. The calculated field strengths at the centers of the passageways range from 58 A/m for the extended-range monitor (cross-sectional area = 5551 cm^2; see page 184 for description of extended-range monitor) to 384 A/m for 10-cm diameter monitors (cross-sectional area = 80 cm^2). All are substantially higher than the 1.6 A/m permitted under ANSI standards. During studies evaluating the effects of PIT-tag monitors on adult salmon passage at WDF Skagit Hatchery (see pages 148 and 153), biologists observed that some migrating adult salmon remained inside the picket V-lead interrogation system for several hours.

The potential for prolonged exposure of the adult salmon to strong EMFs within PIT-tag monitors is cause for concern. Previous studies indicate that EMFs in both kHz and GHz ranges can produce negative biological effects under prolonged (months) exposure (Aldrich and Easterly 1987, Brown and Chattopadhyay 1988). However, no studies have investigated the effects of 125- or 400-kHz EMFs on the biology of fish or other animals. Therefore, we initiated studies: 1) to examine the effect of EMF exposure on chum salmon (*Oncorhynchus keta*) zygotes (see pages 173-183) and 2) to examine the effects of EMF

exposure on breeding adult Asian medaka (*Oryzias latipes*) in a cooperative study with the University of Washington.

To evaluate long-term effects of EMFs on reproductive success, it is preferable to monitor successive generations. Medaka, a freshwater killifish, was chosen for this purpose because of its relatively short generational time (4-6 months), its ability to reproduce year-round, its common use in teratological studies, and its oviparous reproductive behavior, which is similar to that of salmonids. Furthermore, when actively breeding, female medaka can produce eggs daily. The short generational time permitted a replicated two-generation study to be carried out in 2 years: a similar salmonid study would require 6-10 years.

For the most part, significantly longer exposures and stronger EMFs (4-5 times) were tested in this study than would be present within a PIT-tag monitor for adult salmon. We reasoned that if no impact was documented on reproduction or development, then we could assume that shorter exposures would not negatively affect other species. However, if these long exposures negatively affected medaka, then more study would be needed.

Materials and Methods

This study began in 1991 and was conducted at the University of Washington School of Fisheries in Seattle. Actively breeding medaka were exposed to one of the following five treatments: no field; a 400-kHz field for 14, 140, or 1,400 minutes; or a 125-kHz field for 1,400 minutes. The original experimental design called for this series of five treatments to be repeated 15 times, but the decision was made to modify it after 8 replicates because no differences were observed in the data from second-generation fish (see page 167). This

paper reports on the results from these eight replicates. Six groups of broodstock were used to provide test fish. The first group of broodstock was used for Series 1, the second group for Series 2 and 3, the third group for Series 4 and 5, and the fourth, fifth and sixth groups for Series 6-8.

Medaka were cultured under static water conditions following the methods of Kirchen and West (1976). Upon arrival, broodstock were maintained under quarantine for a minimum of 2 weeks before five sets of nine females and six males were removed and placed into 19-L aquaria. Aquaria were placed in flow-through water baths with minimum temperature variance (23-25°C). To induce spawning, photoperiod was set at 16 hours light and 8 hours dark. Lights were offset with timers to create a dawn and dusk effect. The sets of fish were maintained in the aquaria until stability in egg production was observed (approximately six out of the nine females brooding on a daily basis) within all five aquaria. The aquaria were then randomly assigned to one of the five treatments in a series.

Exposures were conducted in an aluminum building (3.0-m long by 2.4-m wide by 2.4-m high) with an aluminum floor to shield RF emissions during testing and to reduce unwanted EMFs from outside sources. The same temperature and light conditions used in the culture room were maintained inside the exposure building. Two plexiglass exposure units were built that measured 52-cm long by 25-cm wide by 30-cm high. The 125-kHz exposure unit was wrapped with 26 wraps of insulated 10-gauge stranded copper wire that were not spaced apart. The 400-kHz exposure unit was wrapped with 11 wraps of wire that were spaced 1 cm apart. The field strengths measured

approximately 215 A/m [field strength was calculated from the measured current of 3.5 amp-root mean square (rms)] at the center of the 125-kHz exposure unit and approximately 260 A/m (10.2 amp-rms) at the center of the 400-kHz exposure unit. For the control treatments, no current was applied to an exposure unit.

To perform an exposure, medaka were transported in their aquarium, which was positioned in the center of an exposure unit. Each of the five treatment groups remained in an exposure unit for 1,400 minutes, regardless of how long the EMF was present. The fish were then transported back to the culture room. Each series required 2 weeks to complete.

Clutches of eggs were collected from all breeding females on the morning the aquarium was transported back to the culture room and for the next 2 days (Fig. 20). To collect eggs, individual females were netted and eggs removed from their abdomens (a mass of eggs was removed by gently grabbing the mass through the net and letting the female wiggle herself free of her eggs). Number of eggs produced by each female was recorded, and all of the eggs from one aquarium were placed into 4-cm petri dishes (one dish per day) containing a liquid saline growth medium recommended by Kirchen and West (1976). Eggs collected over the 3 days were combined to determine the total number of eggs produced for that treatment.

The petri dishes were then placed into a 24°C electric incubator. Petri dishes for each treatment were kept together, but their positions within the incubator were changed every 1-3 days. Growth medium was replaced twice a week. Petri dishes were examined daily until all of the offspring had either died or hatched (hatching starts at around Day 14). During these daily examinations, unfertilized

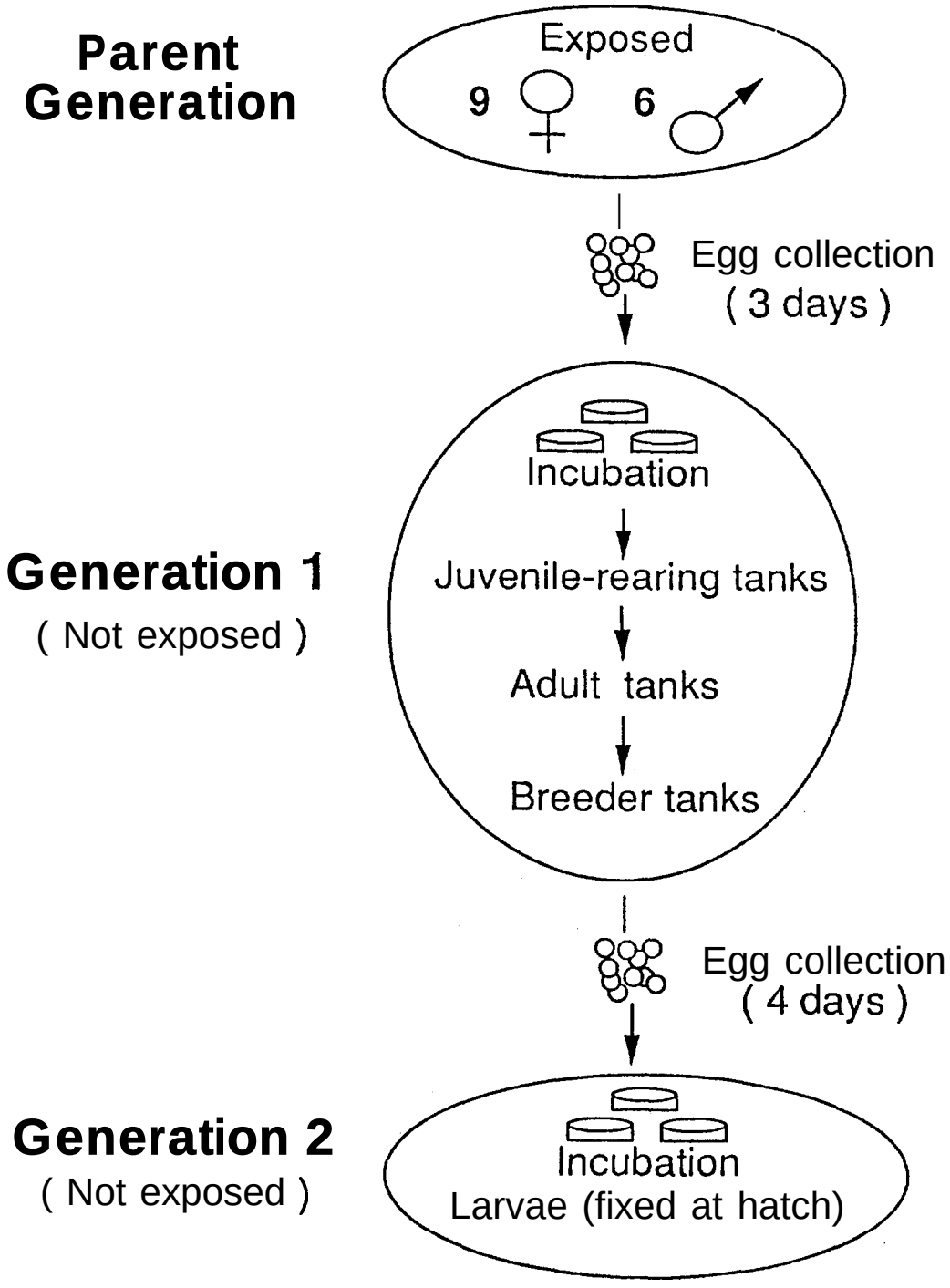

Figure 20. Flow chart of the data collection for the medaka study.

eggs, dead larvae (developing and hatched), and badly deformed hatched larvae that obviously would not survive were counted, removed from petri dishes, and preserved. Hatched larvae that were active and had normal morphologies were transferred immediately to juvenile-rearing tanks. Inactive or slightly deformed hatched larvae were left in the petri dish until they either died or became active. Fertilization rates (number of fertilized eggs/total number of eggs) and larval mortality rates (number of dead larvae/number of fertilized eggs) were calculated.

Deformity rates among the hatched larvae (number of deformed hatched larvae/total number of hatched larvae) were also determined. Deformed hatched larvae included larvae that died from any cause while hatching and those that died shortly after hatching because they had curved spines or missing fins. To examine actively swimming medaka larvae more closely for subtle abnormalities, some excess "transferrable" larvae (those that normally would have been transferred to the juvenile-rearing tanks) from Series 6-8 were preserved. In addition, fork lengths of these excess preserved larvae were measured.

Separate juvenile-rearing tanks were used to house juvenile medaka from each treatment. These rearing tanks were rectangular plastic containers that held 2 L of water and were perforated to permit water to flow through. Water temperature within the containers was maintained at approximately 24°C. One week before juvenile medaka were added, some algae and its accompanying fauna scraped from the adult tanks were added to the tanks to start conditioning the water for the juveniles. In addition to the natural food, juvenile medaka

were fed commercially prepared juvenile fish feed. Juvenile medaka were observed daily and mortalities recorded.

After 4-8 weeks in juvenile-rearing tanks, subadult offspring were placed into the aquaria previously occupied by the parental generation and raised to maturity. The numbers transferred were used to yield estimates of juvenile mortality rates (number of transferred subadults/number of transferred juveniles). Mortality data were also recorded in the adult tanks for each treatment. To compare mortality rates among the series, only mortalities through the first 4 months after transfer to the adult tanks were used to calculate adult mortality rates (number of adults at 4 months/number of transferred subadults).

When three series of these first-generation offspring reached maturity, five males from one series and four females each from the other two series for each treatment were combined in one tank to produce the broodstock for propagating the second generation. Since there were only two series available at the time, Series 7 and 8 were combined. These first-generation broodstock were not exposed, but eggs were collected for 4 days from all of the females in the aquarium. From the first-generation parents, data were collected on the numbers of eggs produced and fertilized. Second-generation offspring were reared until hatching, when they were all preserved for length and gross external deformity analyses. Consequently, mortality data for this generation included only the larval stage.

Egg production, fertilization, deformity, and mortality data for the exposed adults and first-generation offspring were statistically analyzed with randomized-block ANOVAs, using each series as a block. Since the series were combined to produce the second-generation

offspring, data were analyzed using one-way ANOVAs. The significance level for all tests was established at $P \leq 0.05$. Significant F values were further analyzed with Tukey tests. Independent t-tests were used to compare reproductive success between the two generations.

In Series 1-2, we determined that low food levels had caused no eggs to be produced in several treatments for at least 1 out of the 3 days (no eggs were produced over the 3 days in the group exposed to 400 kHz for 140 minutes), and as a result < 50 eggs were produced in all of the groups. Increasing the amount of food fed to the broodstock in Series 3-8 increased egg production significantly ($P < 0.001$); therefore, Series 1-2 were excluded from statistical analyses of data from the first-generation offspring.

Results

There were no significant differences in the mean number of eggs collected over 3 days ($P = 0.408$) or in the percentage of eggs fertilized ($P = 0.541$) from adult medaka exposed or not exposed to EMFs (Table 37). Fertilization rates ranged from 88.0 to 92.8%. Mortality rates during the larval incubation period were not significantly different among the treatment groups ($P = 0.403$): the average larval mortality for the control group was 20.1%, and mortality for the EMF-exposed groups ranged from 27.3 to 33.7%. The group exposed to 125 kHz for 1,400 minutes had the lowest mortality of all exposed groups. There were no significant differences in deformities of hatched larvae among the five treatment groups ($P = 0.686$): deformity rates were 3.0% for the control group and 5.0 to 11.5% for the EMF-exposed groups (Fig. 21). Fork lengths of preserved larvae ranged from 4.45 to 4.54 mm and were not

Table 37. Summary results from Series 3-8 of five treatments exposing actively breeding medaka to different EMF-time combinations. Eggs were collected over 3 days and then cultured to sexual maturity. Probability values are based on randomized-block ANOVAs.

	Control	400 kHz 14 min	400 kHz 140 min	400 kHz 1,400 min	125 kHz 1,400 min	P value
Number of eggs produced						
Mean	126.8	101.2	112.0	150.2	114.7	0.408
SD	(39.6)	(43.5)	(59.9)	(85.5)	(33.2)	
Percent fertilization						
Mean	92.8	92.0	90.8	91.8	88.0	0.541
SD	(5.1)	(2.3)	(3.7)	(4.8)	(7.7)	
Number of hatched larvae						
Mean	94.5	62.3	71.2	94.7	74.3	0.543
SD	(37.3)	(26.7)	(47.3)	(59.2)	(31.3)	
Larval mortality rate						
Mean	20.1	33.7	33.5	32.9	27.3	0.403
SD	(11.6)	(5.3)	(13.3)	(17.2)	(21.8)	
Percent deformity						
Mean	3.0	5.0	11.4	11.5	11.4	0.686
SD	(2.0)	(7.9)	(8.1)	(20.2)	(19.2)	
Larval length						
Mean	4.53	4.45	4.47	4.54	4.47	0.455
SD	(0.19)	(0.20)	(0.22)	(0.22)	(0.22)	
Number of juveniles						
Mean	80.5	47.9	56.2	69.8	58.9	0.277
SD	(27.8)	(12.0)	(46.5)	(34.0)	(28.4)	
Juvenile mortality rate						
Mean	14.9	17.9	20.7	20.0	19.1	0.975
SD	(10.8)	(14.4)	(23.6)	(17.9)	(17.1)	
Number of adults						
Mean	78.0	43.7	49.4	60.5	49.9	0.156
SD	(27.4)	(11.9)	(36.4)	(37.2)	(24.1)	
Adult mortality rate						
Mean	3.4	8.6	8.5	15.0	13.4	0.643
SD	(3.0)	(8.5)	(10.0)	(26.7)	(14.9)	

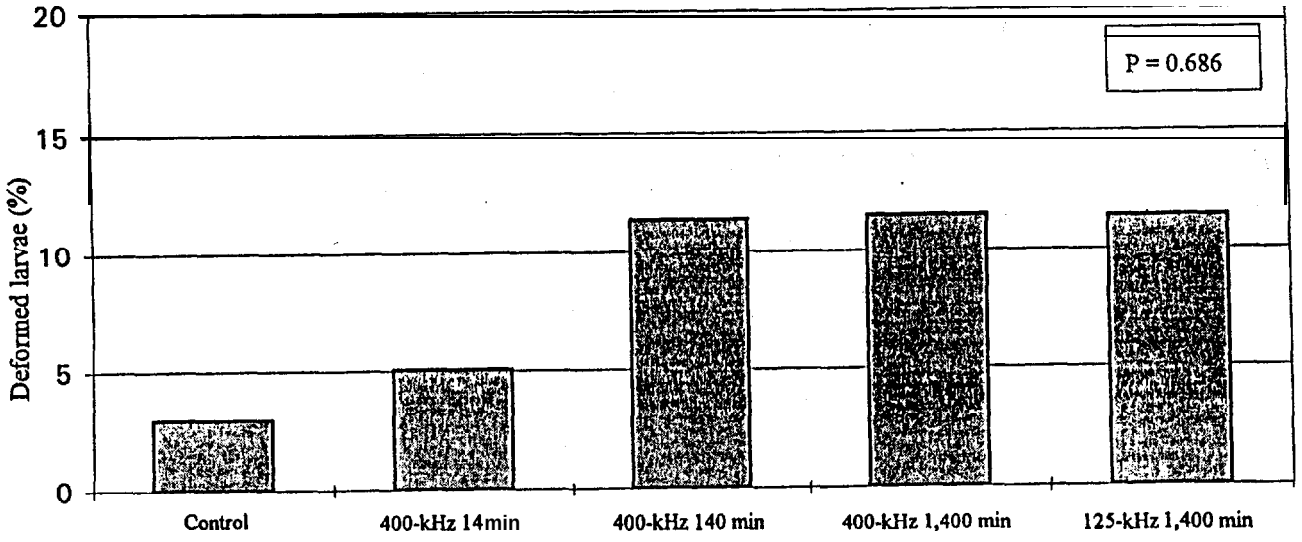

Figure 21. Percent deformed among the first-generation offspring for the five treatments.

significantly different among the five treatment groups (P = 0.455) (Table 37).

Over the juvenile-rearing period, 14.9% of the control and 17.9 to 20.7% of EMF-exposed medaka died (Table 37). These mortality rates were not significantly different (P = 0.975). Subadult and adult medaka were held in aquaria for 4-9 months before they were transferred to breeding tanks. During the first 4 months of this adult-rearing period, 3.4% of the control fish died and between 8.5 and 15.0% of the EMF-exposed fish died. These adult mortality rates were not significantly different (P = 0.643). In general, mortality rates decreased as the fish aged (Table 37).

In comparing overall mortality rates from fertilization to 4-month-old adults between the five treatments, we observed that medaka in the control group survived 17-21% better than those in EMF-exposed groups (Fig. 22). However, overall mortality rate to adulthood for the control group was not significantly lower than rates for the exposed groups (P = 0.156). The 17-21% survival advantage of the control group would mean a difference of 130-160 adult fish if the numbers of eggs produced by the four exposure groups in Series 3-8 had been equal to that of the control group.

Results from second-generation fish for the five treatments indicated no significant differences in fertilization rates (P = 0.966), larval mortality rates (P = 0.737), deformity rates (P = 0.267), or mean egg production over 4 days (P = 0.132) (Table 38).

First-generation medaka were smaller than the parent generation and consequently produced significantly fewer eggs (P < 0.001) and lower fertilization rates (P = 0.002). However, larval mortality

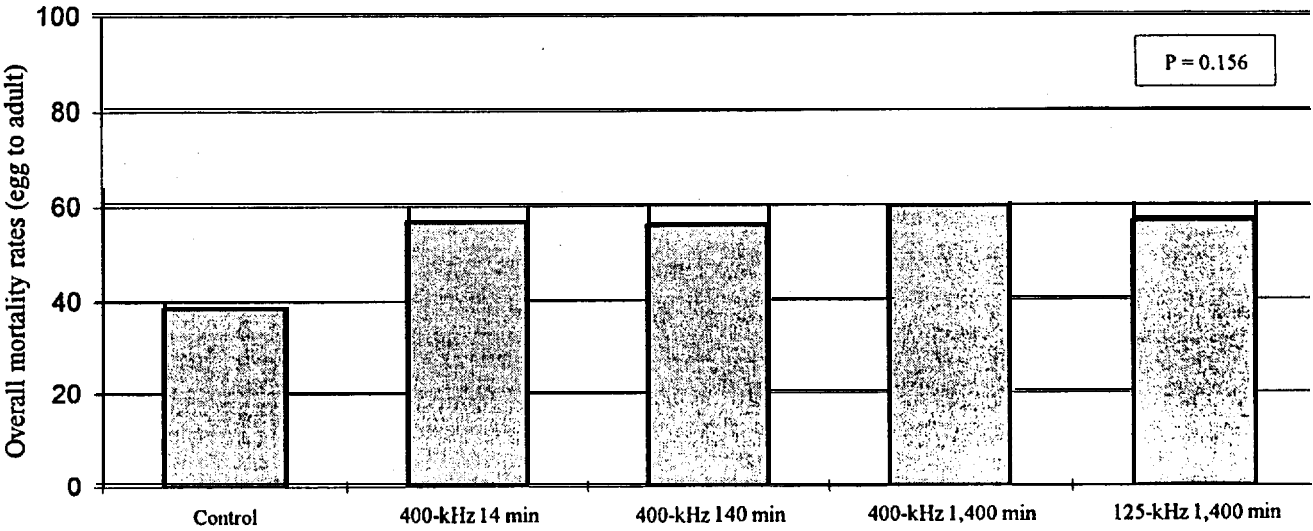

Figure 22. Mortality rates from fertilization to maturity (4 months after initial transfer into adult tanks) for the five treatments.

Table 38. Summary results from Series 3-8 of five treatments for the first generation's reproductive effort and the performance of their offspring (second generation) through hatching. Probability values are based on randomized-block ANOVAs.

Category	Control	400 kHz 14 min	400 kHz 140 min	400 kHz 1,400 min	125 kHz 1,400 min	P value
Number of eggs produced						
Mean	47.3	65.2	73.3	67.3	74.2	0.476
SD	(10.4)	(15.2)	(41.1)	(27.5)	(32.9)	
Percent fertilization						
Mean	86.6	82.2	83.5	83.2	84.6	0.959
SD	(10.8)	(9.3)	(17.8)	(7.3)	(8.7)	
Number of hatched larvae						
Mean	31.0	36.5	51.0	38.2	44.2	0.551
SD	(12.6)	(11.8)	(34.5)	(21.4)	(16.3)	
Larval mortality rate						
Mean	24.5	29.5	20.2	33.2	27.3	0.679
SD	(20.5)	(22.3)	(10.0)	(18.9)	(13.7)	
Percent deformity						
Mean	4.3	7.7				
SD	4.6) (	7.9) (	10.4 (8.5)	12.4 (17.7)	5.0 (3.4)	0.267

rates were not significantly different between generations (P = **0.540**).

Discussion

Large variations were observed among the series in terms of total egg production. Some of this variation was due to unequal numbers of females brooding in each aquarium on each of the collection days; however, large variation remained even when egg production was calculated on a per-female basis. Variation in individual female performance is well documented for other species (e.g., Refstie and Gjerdem 1975, Blanc and Chevassus 1979).

The larval incubation period (fertilization through hatching) was the period of highest mortality. Attrition continued over the entire life cycle, and after six series, we observed a positive difference of approximately 130 adult fish between the control group and the best surviving EMF-exposed group. There was also a trend for the control group to have fewer deformed hatched larvae. Similar findings have been observed in fish toxicology studies, which have demonstrated that hatching and transition to exogenous feeding are both critical periods in which experimental fish have exhibited significantly higher mortalities or abnormalities than untreated controls (Rand and Petrocelli 1985, Blaxter 1988).

Although the lower survival and higher deformed hatched larvae rates among the EMF-exposed treatments were not significantly different from the control rates, we were concerned because the statistical power of our experiment was low, with only six series having been completed. Therefore, the testing procedure is being modified to increase the number of replicates or series to 30. The modified procedure will only evaluate the performance of first-

generation offspring through the transition to exogenous feeding. This increased statistical power should help to confirm or disprove the observed trends.

Substantiating or disproving these trends is necessary because the results will determine how interrogation systems for adult salmon are designed and may preclude the installation of interrogation systems for volitionally swimming adult salmon. Therefore, it seems prudent to conduct a second medaka study and concentrate on monitoring the performance of first-generation offspring.

Summary, Conclusions, and Recommendations

1. The potential for long exposure of adult salmon to strong EMFs within monitors caused concern among NMFS personnel. To test whether strong EMFs could affect reproducing fish, actively breeding medaka were exposed to one of the following five treatments: no field; a 400-kHz field for 14, 140, or 1,400 minutes; or a 125-kHz field for 1,400 minutes.
2. Exposed adults and their offspring were monitored in terms of reproductive effort, survival, gross deformities, and growth among the hatched larvae.
3. For each treatment, there was a large variation in terms of total egg production among the series. However, overall there were no significant differences in the mean numbers of eggs produced or in the percentages of eggs fertilized among nonexposed and EMF-exposed adults.
4. Results for offspring from nonexposed and EMF-exposed adults indicated that the larval incubation period (fertilization through hatching) had the highest mortality rate. The average

larval mortality for the control group was 20.1%, and average mortality for the exposure groups ranged from 27.3 to 33.7%.

5. Like the survival results, the control group had fewer deformed larvae (3.0%) than the EMF-exposed groups (5.0-11.5%). These results suggest that exposure to the strong 125-kHz and 400-kHz EMFs may be having some effect on the offspring performance.
6. Data from second-generation fish indicated there were no significant differences among treatment groups in mean egg production, fertilization, larval mortality, or percent abnormality.
7. We recommend that testing continue, but that it concentrate on evaluating first-generation offspring performance through the transition to exogenous feeding. This will allow more replicates to be completed in a short time, which will increase the statistical power of the study and thereby help to confirm or disprove the survival and deformity trends.

Electromagnetic Field Effects on Developing Zygotes: Chum Salmon (*Oncorhynchus keta*)

Introduction

NMFS initiated a second study with chum salmon to examine the potential negative effects of EMFs from PIT-tag monitors on fish biology. However, since the life cycle of chum salmon is too long to run a multiple-generation study in less than 8 years, this study examined the effects of EMFs on chum salmon zygotes. Although zygotes would not normally be exposed to EMFs in PIT-tag monitors, they were selected because meiosis and the first few mitotic divisions in zygotes are critical developmental stages in fish (Battle 1944, Rugh 1954).

Research has shown that organisms often express bilateral asymmetry after exposure to environmental stresses such as extreme incubation temperatures and EMFs from high voltage transmission lines (Beacham 1990, Freeman et al. 1994). Meristic and morphometric characters were examined in chum salmon fry to determine whether 24-hour exposures to 125- and 400-kHz EMFs after fertilization affected bilateral symmetry.

Materials and Methods

The experiment was conducted at the NMFS Big Beef Creek Field Facility. Exposures were performed in three aluminum buildings (3.0-m long by 2.4-m wide by 2.4-m high) that included aluminum floors. We used the same 125- and 400-kHz exposure units as those used in the medaka study (see pages 159-160). In addition, a third, nonfunctional exposure unit was built for the controls. As in the medaka study, glass 19-L aquaria were placed within the exposure units during the

treatments; however, in this study, the aquaria were supplied with flow-through, aerated, 10°C well water.

Eggs and milt were collected from live spawning chum salmon at the WDF George Adams Hatchery. Four males and four females were spawned on each of 6 days to yield 24 families over a period of 3 weeks (20 November to 9 December 1991). The eggs and milt from each parent were kept in separate plastic bags and transported in a cooler to the Big Beef Creek facility (transportation time was approximately 45 minutes). At the Big Beef Creek facility, eggs and milt were randomly paired and mixed, allowed to stand for 10 minutes, and then rinsed with an iodine:water solution of 1:1,000 during water hardening.

After the iodine rinse, the newly activated eggs from each family were randomly divided into three lots of 55 eggs each. Each lot was then transferred to a perforated egg holder that was suspended in one of the three aquaria. This process was repeated for each of the 4 families, so that all 4 families were represented by one lot of 55 eggs in each of the 3 treatments. When the 12 egg lots were in the aquaria, the doors of the exposure buildings were closed and the exposure units were turned on (except for the control unit) for 24 hours.

Immediately after the exposure period, each egg lot was transferred to its own egg-incubation tray. Developing salmon from each tray were inspected seven times during incubation (Days 43, 58, 63, 66, 70, 74, and 79 post-fertilization). On these days, all mortalities were removed and preserved in buffered formalin. Numbers of eggs, alevins, or fry remaining in each tray were recorded during the inspections.

On Day 86 (when the *majority* of the salmon fry had absorbed their yolksacs), each test lot was euthanatized with a lethal dose of MS-222 and preserved in buffered formalin solution. The fork length of each preserved fry was measured to the nearest millimeter. Preserved fry were also inspected under a dissecting microscope to record any deformities: unabsorbed yolksacs; deformities of the jaw, fins, spine, or eyes; or abnormal skin pigmentation.

For the three treatments, five preserved fry with normal (gross) morphologies were randomly chosen from eight families to be measured for bilateral asymmetry. For each salmon fry, left and right pectoral fin rays were counted for meristic asymmetry, and length measurements of the six longest pectoral fin rays and the eye orbit (as defined by Hubbs and Lagler 1958) were taken for morphometric asymmetry. Pectoral fin rays are a standard character for meristic asymmetry analysis, while orbit length had not previously been used for morphometric analysis.

All measurements were made using the computer program Optimus, by Aldus, on a 386 computer. Optimus was linked to a video camera mounted on a dissecting microscope and to a video monitor where the image was projected. All measurements were taken to the nearest 0.001 mm. Each pectoral fin was excised, stained with alizarin dye, and examined under a microscope (40X) for the ray count. At 16X, each ray length was measured from the "heel" of the foot-shaped curve on the excised edge to the edge of the fin at mid-curve (Fig. 23). Measurements were repeated five times to determine measurement error. Five measurements were also taken for each orbit length.

A value of asymmetry for meristic counts was obtained from the equation $|L - R|$, or the absolute value of left count minus the right

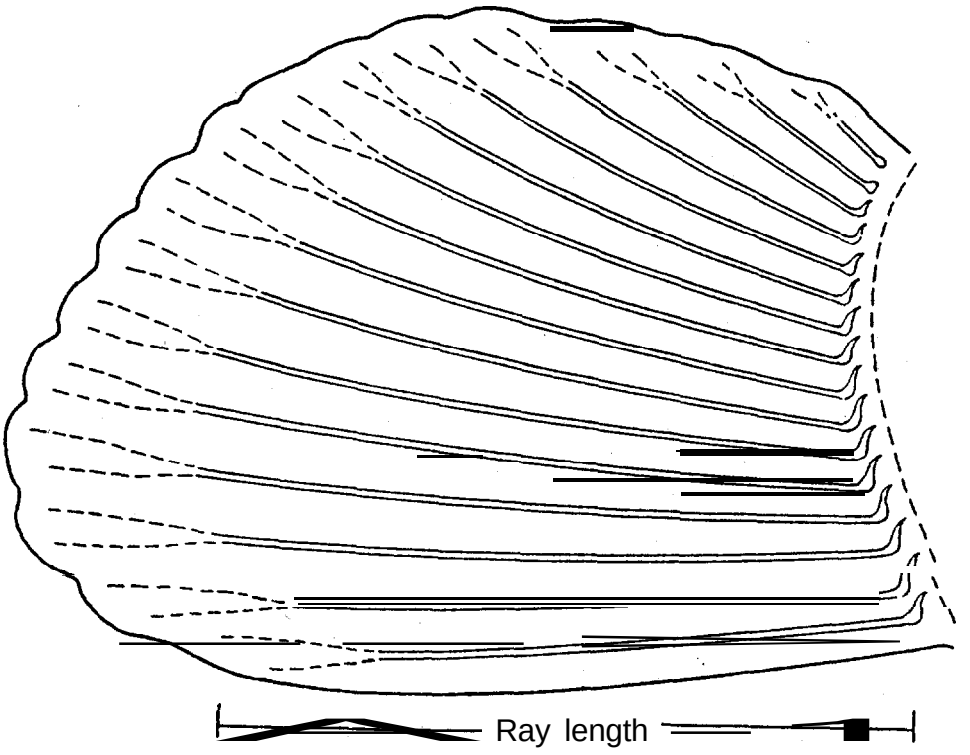

Figure 23. Fin ray of a chum salmon. Length measurements as marked were taken on the six longest rays.

count. To obviate scaling problems associated with growth for the morphometric measurements, the mean lengths of left and right fin rays and left and right orbit lengths were subjected to the equation $|(L - R)/(L + R)|$ (after Ames et al. 1979). This equation then yielded asymmetry values for fin rays and orbit lengths.

Fork-length, survival to Day 86, deformity, and asymmetry data were analyzed with randomized-block ANOVAs using each family as a block. Significance was established at $P \leq 0.05$. Significant F values were further analyzed with Tukey tests.

Results

Survival--On average, 47.4, 48.2, and 49.2 salmon fry from 55 eggs survived to **Day** 86 for the control, 125-kHz, and 400-kHz groups, respectively (Table 39). No significant difference was found in the number of surviving fry among the three treatments ($P = 0.182$); however, there were significant differences among families ($P < 0.001$). A Tukey test separated the 2 families with the lowest survival (2-23 fry) from the remaining 22 families (45-54 fry).

Growth--No significant differences were found in average fork lengths among the three treatments ($P = 0.601$): the averages were 35.0, 34.9, and 35.0 mm for the control, 125-kHz, and 400-kHz groups, respectively (Table 39). However, there were significant differences in average fork lengths among the 24 families ($P < 0.001$). Considering that lengths were measured only to the nearest millimeter, it is not surprising that the Tukey test yielded many overlapping groupings among the families.

Deformities--Jaw deformities were the most common deformity observed. Since there were no distinct patterns among the different types of deformities, the data were combined. Percentages of deformed

Table 39. Summary results for EMF-exposed chum-salmon zygotes cultured through Day 86. Mean number of survivors, average fork length (mm) and percent deformities are given for the three treatments. Probability values are based on randomized-block ANOVAs.

	Control	125 kHz 1,440 min	400 kHz 1,440 min	P value
Number of families	24	24	24	
Number of eggs/family	55	55	55	
Number of survivors				
Mean	47.4	48.2	49.2	0.182
SD	(11.4)	(12.2)	(12.1)	
Fork length				
Mean	35.0	34.9	35.0	0.601
SD	(1.2)	(1.2)	(1.2)	
Percent deformities				
Mean	13.4	17.4	14.4	0.429
SD	(15.8)	(14.5)	(15.5)	

fish among the survivors ranged from 13.4 to 17.4% and were not significantly different among the three treatments (P = 0.429) (Table 39). Again, there were significant differences among the families (P < 0.001). A Tukey test separated the families into three groupings: 2 families with significantly higher percentages of deformities (40.1-41.3%), 6 families with significantly lower percentages of deformities (0.6-3.3%), and 16 families with intermediate values (5.0-33.3%) that could not be distinguished from either extremity. The two families that had the higher percentages of deformed fish were not the families having the lowest survival.

Asymmetry--Asymmetry values for meristic counts were not significant for the three treatments (P = 0.719) (Table 40). Number of left and right rays ranged between 14 and 17. ANOVAs revealed that the asymmetry values for the three treatments were not significant for any of the pectoral fin rays (Table 40). Mean lengths of the six pectoral fin rays ranged from 3.11 to 3.96 mm. The five measurements per ray (measurement error) yielded a mean standard deviation of 0.006 mm. There was no significant difference in symmetry between the left and right orbit lengths with respect to treatment (P = 0.623). The mean orbit lengths ranged from 2.58 to 3.18 mm. The five measurements per eye yielded a mean standard deviation of 0.004 mm.

Discussion

At 10°C (constant temperature of the well water at the Big Beef Creek facility), chum salmon undergo 4-5 mitotic cleavages during the first 24 hours after sperm activation (New 1966). Exposure during these critical developmental stages to 125- and 400-kHz EMFs did not affect survival or growth of developing chum salmon. Cameron et al. (1993) examined effects of 60-Hz EMFs on developing sea urchins and

Table 40. For each treatment, mean absolute values of bilateral asymmetry for the pectoral fin ray counts and morphometrics, and for eye orbit length. Probability values are based on randomized-block ANOVAs.

	Control	125 kHz 1,440 min	400 kHz 1,440 min	P value
Fin counts				
Mean	0.25	0.20	0.18	0.719
SD	(0.21)	(0.15)	(0.17)	
Fin Ray 1				
Mean	0.012	0.009	0.011	0.259
SD	(0.004)	(0.004)	(0.010)	
Fin Ray 2				
Mean	0.011	0.011	0.013	0.678
SD	(0.006)	(0.005)	(0.005)	
Fin Ray 3				
Mean	0.010	0.008	0.009	0.569
SD	(0.004)	(0.003)	(0.002)	
Fin Ray 4				
Mean	0.009	0.007	0.010	0.088
SD	(0.001)	(0.002)	(0.004)	
Fin Ray 5				
Mean	0.009	0.009	0.009	0.753
SD	(0.003)	(0.002)	(0.003)	
Fin Ray 6				
Mean	0.009	0.009	0.009	0.823
SD	(0.003)	(0.002)	(0.003)	
Eye orbit				
Mean	0.007	0.012	0.008	0.623
SD	(0.004)	(0.014)	(0.004)	

laboratory mice and found the morula stage (when the species were switching from maternal-derived histones to internal histone synthesis) to be the most sensitive stage to EMF exposure. The developing chum salmon probably had not reached the morula stage before they were removed from the exposure units.

The 125- and 400-kHz exposures did not increase the occurrence of gross deformities. The overall low survival and high percentages of deformities among the three treatments may have been caused by the iodine-rinse protocol. The iodine rinse concentration was 10 times greater than the suggested maximum level and was applied during the sensitive period of water hardening instead of applying it after water hardening (Amend 1974, Fowler and Banks 1990, Leary and Peterson 1990, Chapman and Rogers 1992).

Pectoral fin ray counts in this study did not deviate from the normal counts of around 16 for chum salmon (Hart 1973). Results showed that 24-hour exposures to 125-kHz and 400-kHz EMFs did not affect the bilateral symmetry of chum salmon fry pectoral fin rays or eye orbit lengths. The small size of these fish precluded the meristic study of gill rakers and branchiostegal rays, both of which have been commonly used in bilateral asymmetry studies. Longer exposure, (weeks to months) as in the high-voltage transmission-line study mentioned earlier (Freeman et al. 1994), might have given other results. However, it is unlikely that salmon would be exposed for longer than 24 hours to the EMFs within PIT-tag monitors.

There were no significant differences in survival, growth, and deformity rates among the three treatments, but there were significant differences among families. This suggested the differences were not due to EMF exposure, but were genetically based. This suggestion was

strengthened by the evidence that different specific families were negatively affected in each of these three categories.

These findings would have been stronger had the salmon fry been maintained until they were actively feeding. The transition to exogenous feeding has been found to be a critical period when treatment fish have exhibited significantly higher mortalities or abnormalities than untreated controls (Rand and Petrocelli 1985, Blaxter 1988). Even though meiosis and mitosis are critical developmental stages, exposing the returning adults directly or exposing offspring through the morula stage may have yielded different results.

Summary, Conclusions, and Recommendations

1. Although newly activated eggs would not normally be exposed to EMFs in PIT-tag monitors, they were selected for use based on the knowledge that their meiotic and early mitotic divisions are critical developmental stages.
2. On average, 47.4, 48.2, and 49.2 fry out of 55 eggs survived to Day 86 in the control group, 125-kHz group, and 400-kHz group, respectively. No significant difference was found in the number of survivors among the three treatments; however, there were significant differences among the 24 families. The same pattern of differences was found for average fork lengths and percent deformities.
3. There were no significant differences in survival, growth, and deformity rates among the three treatments, but there were significant differences among families. This suggested the differences were not due to EMF exposure, but were genetically based.

4. Both pectoral fins and eye orbits were measured and analyzed for morphometric asymmetry. No significant differences in asymmetry measurements were seen among the three treatments. The ray counts were also found not to deviate from counts reported in the literature for normal chum salmon.
5. These findings would have been stronger had the fish been maintained until they were actively eating. The transition to exogenous feeding has been found to be a critical period for survival.
6. Based on the results of medaka and chum salmon EMF-exposure studies, it appears permissible to proceed with the development of an adult salmon PIT-tag monitor. However, it seems prudent to continue examining EMF effects on fish reproduction and development, especially with the medaka, until more definitive answers are reached. To reduce any potential negative effects from EMF exposure, we recommend designing PIT-tag monitors that limit EMF exposure on adult salmon.

Development of an Extended-range PIT-tag Monitor for Adult Salmon: Technical and Biological Considerations

Since PIT tags remain active over the entire lifespan of a salmon, it should be possible to interrogate returning adult salmon that were tagged as juveniles. To accomplish this goal, PIT-tag monitors must include large passageways (preferably cross-sectional areas ≥ 5,000 cm^2) for the adult salmon. However, in 1989, the reading range of PIT-tag monitors was limited to passageways with maximum cross-sectional areas of only 900 cm^2. While this reading range would be sufficient for interrogating adult salmon passing through Denil fish ladders or overfall-weirs, it would not be sufficient for interrogating adult fish ascending traditional fish ladders. Therefore, to design an interrogation system for adult salmon ascending fish ladders, the reading range had to be significantly increased. Between 1989 and 1993, different approaches, such as reducing the operating frequency of the monitors (125 vs. 400 kHz), were tried toward developing an extended-range PIT-tag system. Below is a summary of the work performed.

Technical Development

1989--A research and development contract for developing an extended-range interrogation system was issued to Destron/IDI. The system they designed combined three independent extended-range monitors. Each monitor had a single excitation/detection coil and an opening that measured 80-cm long by 91-cm wide by 61-cm high (cross-sectional area = 5,551 cm^2). The NMFS Sand Point Electronics Shop and the contractor evaluated the prototype interrogation system. Initial performance tests conducted at the Destron/IDI test facility in Boulder, Colorado were encouraging: at velocities up to 1.5 m/sec,

this interrogation system could efficiently read > 95% of properly oriented tags (0-45° relative to an EMF).

Based on these positive results, the extended-range interrogation system was further tested at the NMFS Pasco Field Station. Several electronic problems were encountered during testing at Pasco (Prentice et al. 1993). While correcting these problems in the fall, Destron/IDI and the NMFS Electronics Shop increased the maximum reading range for PIT-tag monitors with a maximum cross-sectional area of 1200 cm^2.

1990--The extended-range interrogation system was then reevaluated at the Destron/IDI test facility in early 1990. These tests were directed at determining 1) tag-reading speed, 2) the effect of tag orientation on tag-reading ability, 3) the effect of coil geometry on tag-reading ability, 4) interference problems between coils, and 5) RF shielding requirements to meet Federal Communications Commission (FCC) regulations for low-power transmission devices.

Results of these tests and a description of the tested prototype extended-range interrogation system are presented in Appendix B. In summary, Destron/IDI found that RE varied with velocity, tag orientation, and coil geometry. Regardless of velocity or coil geometry, a zero-degree tag orientation relative to the tag-energizing field gave the highest RE while a 45-degree orientation gave the lowest. All tags were read at the maximum velocity tested (2.7 m/sec) when placed at zero-degree orientation to the EMF. Tag location within the EMF also affected tag-reading ability, with the weakest excitation field being in the center of the coil.

Destron/IDI found that interference between the coils of the three monitors was not a severe problem when the coils were located

2 m from each other, but was a problem at closer distances. The monitors were designed to be time-division multiplexed so that only one coil was energized at any given time. However, an induction current was introduced by whichever coil was activated into the adjacent coils (< 2 m apart). This induced current changed the tuning of all coils and reduced power below levels needed to generate an adequate tag-energizing field. Increasing the distance between coils reduced this problem.

A loss of current (reduced energizing field) was also noted when grounded conductors, such as aluminum shields were placed within 30 cm of the coils. However, no effect was recorded with conductors placed at a distance of 61 cm. This shielding test was conducted out of water because of space restrictions. Other results may have been observed had the test been conducted in water.

Emission testing was conducted 25 m from an operational coil (400 kHz) having no shielding of its own, but located within a shielded room. Emission from the 10 mV/m signal received from the system was about 10-fold higher than what is currently acceptable under FCC low-power communication regulations. Based on these results, Destron/IDI recommended that no person be allowed within 2 m of a coil when activated unless the coil is shielded.

Following analysis of the above results, a series of field tests were conducted in late 1990 at the NMFS Manchester Marine Experimental Station to verify the effect of shielding on emission levels and to determine tag-reading ability in a non-laboratory environment. The results were not encouraging: 1) RF emissions were about 10 times higher than those allowed by the FCC, 2) the coils acted as receivers for external noise, and 3) the power lines leading to the exciter and

controller carried interfering signals. Consequently, the signal-to-noise ratio was poor, which prevented the PIT tags from being read. Detailed results for these tests are presented in Appendix C. Based on the 1990 results, it was concluded that a new approach was required to achieve the project objective of extending the reading range.

Biological Evaluation

1990--From 8 October to 1 November 1990, we examined the response of returning adult coho salmon to one of the Destron/IDI extended-range PIT-tag monitors. Similar to evaluations of smaller PIT-tag monitors for juvenile salmon, the effects of adding supplemental lighting and the presence of an active EMF were examined. Since the monitor was incapable of reading PIT tags, untagged fish were used.

A choice approach similar to that described by Hansen (1969) was used to determine how adult coho salmon would respond to different passageway conditions. This approach controlled temporal variation and determined if any side preference was exhibited. The experimental design compensated for side preference and therefore, although monitored, side-preference bias was prevented from affecting the results.

This study was conducted by NMFS personnel at the WDF Minter Creek Hatchery. The test site was near the fish ladder in the adult holding pond (Fig. 24). Approximately 3 m from the fish ladder, two covered, rectangular aluminum flumes (3.7-m long by 1.8-m wide by 2.6-m high) were placed side by side. The interior of each flume was painted black to reduce glare and illuminated with four 2.4-m-long, daylight spectrum fluorescent lights (Chroma-50) attached to each cover. These lights remained on during all of the tests.

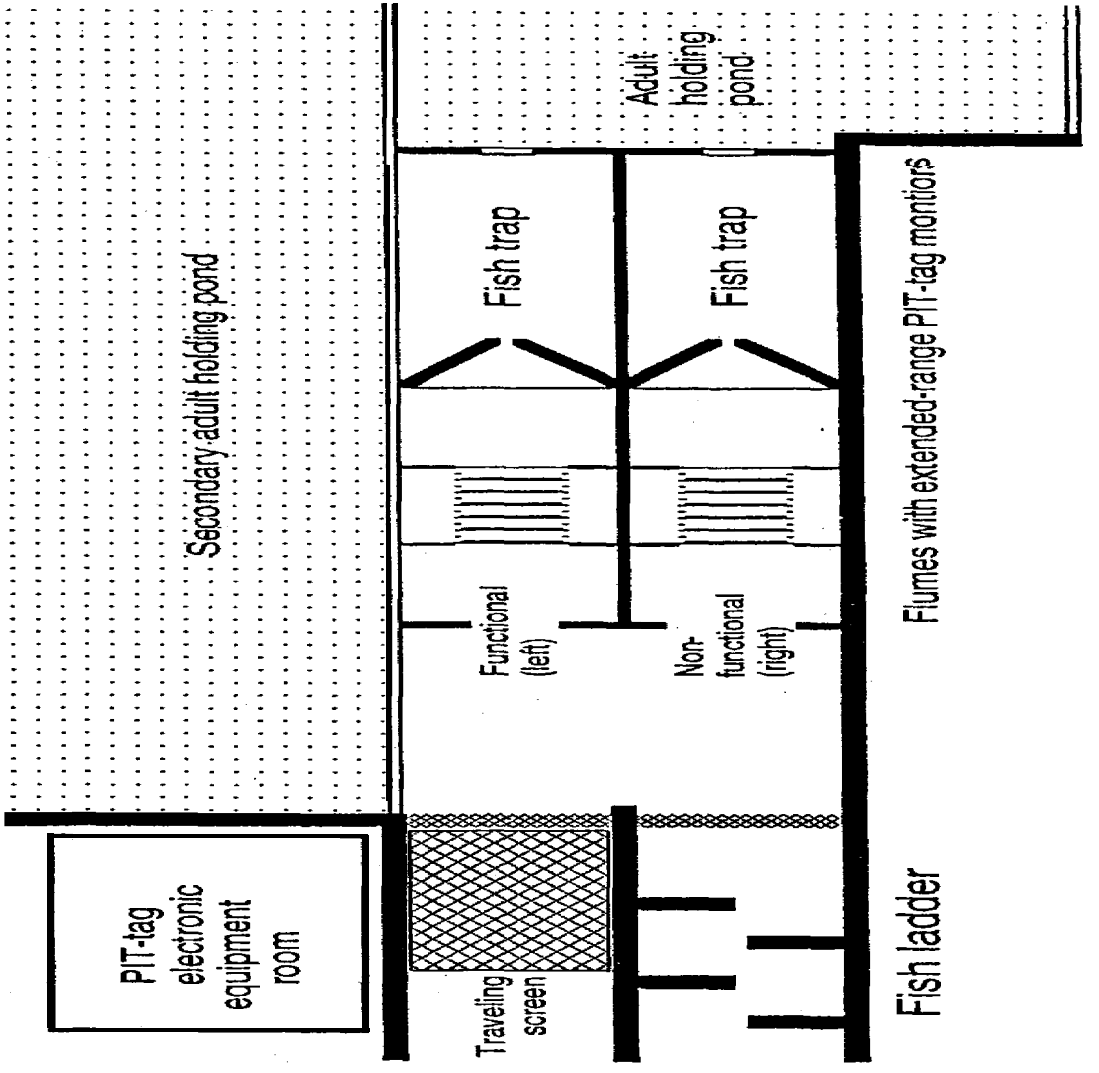

Figure 24. Location of flumes and fish traps at Minter Creek Hatchery, 1990.

A functional extended-range monitor (80-cm long by 86-cm wide by 117-cm high) was centrally located in the left flume (Fig. 25). The transparent passageway of the monitor measured 80-cm long by 61-cm wide by 91-cm high (cross-sectional area = 5,551 cm^2). The coil consisted of seven turns of 10-gauge wire (1,000-volt insulation rating) spaced 2.5 cm apart. Powered by a 419 kHz, 10-amp current, the field strength in the center of the passageway was calculated at 58 A/m. The right flume housed a nonfunctional monitor of the same size as the functional monitor. Barriers around each end of each passageway prevented fish from bypassing the test system.

The upstream end of each flume abutted a fish trap that measured 3.7-m long by 1.8-m wide by 1.8-m high (Figs. 24 and 25). The traps afforded accurate counts of adult salmon passage during testing. Fish entered the traps from the flumes via a closeable picket V-lead gate. A removable panel at the upstream end of each trap was opened during non-testing hours to allow uninhibited fish passage into the adult holding pond. All tests were completed during daylight hours using the hatchery's returning run of untagged coho salmon.

To examine the effects of EMFs, volitional passage of returning adult coho salmon was compared through 1) the left versus the right flume to ascertain if a side preference existed (during EMF-absent trials only), and 2) the functional monitor when it was active (EMF present) versus inactive (EMF absent). The two EMF conditions were alternated over 50 one-hour trials (25 trials per condition).

Numbers of fish passing per trial varied with the natural migration of this stock over the test period. Timing for each trial was defined by the opening and closing of the picket V-lead gates on the traps. The EMF, when on, was deactivated before a biologist

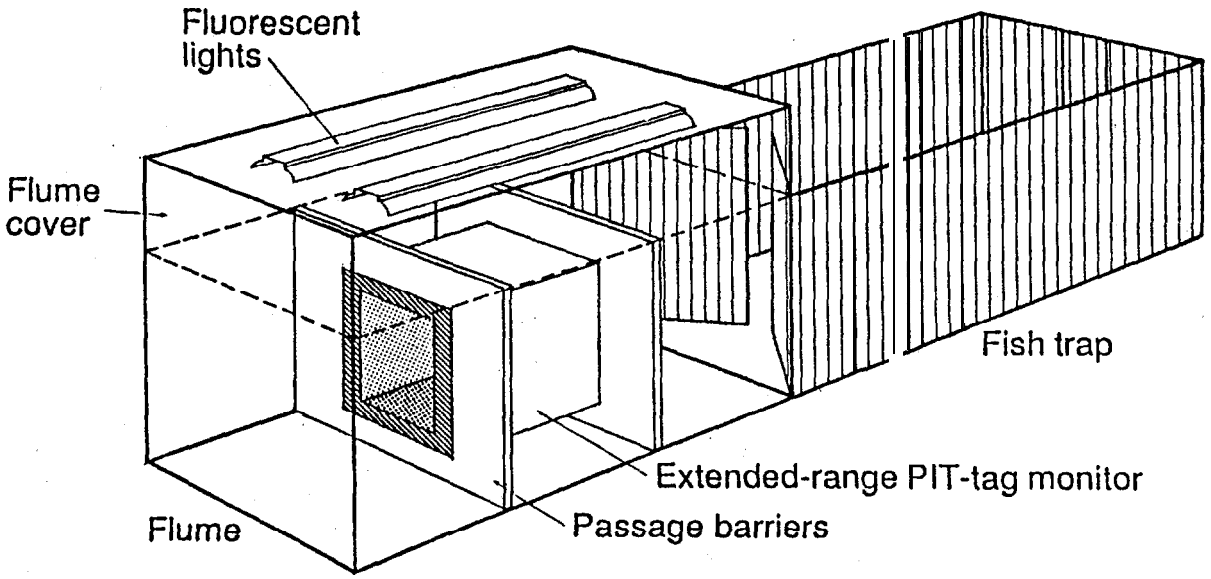

Figure 25. Single flume-trap arrangement with extended-range monitor.

entered the traps to count fish and release them into the holding pond. The alternate test condition was then introduced for the next trial, and a 10-minute period was imposed to allow water conditions to stabilize before the next trial began.

To examine the effects of supplemental lighting, volitional passage of coho salmon was compared through 1) the left versus the right flumes to ascertain if any side preference existed (during the nontreatment, direct-lighting trials only), and 2) the functional monitor under direct versus indirect light. No EMF was present during these 50 trials. The passageway of the PIT-tag monitor was illuminated either directly, by fluorescent lights shining through the transparent top of the passageway, or indirectly, by darkening the top and sides of the passageway with a black plastic cover. The black cover allowed light to enter the passageway opening only through the ends of the monitor. The testing procedure was the same as in the active EMF phase, with the light conditions being alternated between trials.

In each trial, a passage ratio was obtained for each side (number of fish in the left or right trap/total number of fish in both traps). Passage ratios for nontreatment trials of each phase (EMF absent or monitor directly lit) were analyzed with Chi-square analyses to determine if side preferences existed. Passage ratios through the active, extended-range monitor for the treatment and nontreatment trials were compared using t-tests on arcsine transformed ratios. Significance was established at $P \leq 0.05$.

A total of 1,037 adult coho salmon were counted and released from the traps during the 50 EMF trials. Adult salmon did not exhibit a side preference for either the right (50.0 ± 27.8%; $\bar{x}$ ± SD) or left

(50.0 ± 27.8%) flume (P = 0.433) (Table 41). Passage ratios through the extended-range monitor were not significantly different whether the EMF was present (54.0 ± 27.1%) or absent (50.2 ± 27.8%) (P = 0.651) (Table 42). This indicated that adult salmon passage was not affected by the EMF produced by the extended-range monitor. In similar choice studies, Prentice et al. (1993, see pages 148-149) found that the 400-kHz EMF in similar but smaller monitors (30-cm long by 15-cm wide by 61-cm high; cross-sectional area = 915 cm^2) did not affect adult coho or chinook salmon passage. Juvenile salmon passage was also not affected by the presence of the 400-kHz EMF in 10-cm-diameter PIT-tag monitors (cross-sectional area = 80 cm^2) (Prentice et al. 1993, see page 44). We concluded that salmon passage was not affected by the presence of the 400-kHz EMF within the passageways of PIT-tag monitors.

A total of 795 adult coho salmon were counted and released from the traps during the 50 light trials. No side preference was exhibited for either the right (50.7 ± 27.1%) or left (49.3 ± 27.1%) flumes (P = 0.161) (Table 43). Passage ratios were not significantly different through the extended-range monitor whether it was directly (50.6 ± 27.1%) or indirectly (44.3 ± 26.2%) lit (P = 0.410) (Table 44). Surrounding illumination from the fluorescent lights probably illuminated the covered passageway sufficiently for adult salmon to determine that no obstacles or predators were present in the darker passageway (relative to the rest of the channel). These results are similar to other studies (Prentice et al. (1993), and see pages 30-54 and 144-150) and permit us to conclude that if artificial lights supply sufficient light intensity, then fish passage behavior is similar through artificially and naturally illuminated passageways.

Table 41. Number and mean percentage of adult coho salmon completing passage through the left and right flumes during EMF testing (inactive-field trials only). Probability value is based on a Chi-square test for side preference.

	Left flume	Right flume
Number of fish completing passage	247	221
Percentage of fish completing per trial		
Mean	50.0	50.0
SD	(27.8)	(27.8)
	$\chi^2 = 0.616$	P = 0.433

Table 42. Number and mean percentage of adult coho salmon completing passage through the left test flume during EMF testing. Probability value is based on a t-test.

	EMF Absent	EMF Present
Number of replicates	25	25
Number of fish completing passage (left flume)	247	319
Percentage of fish completing passage per trial (left flume)		
Mean	50.2	54.0
SD	(27.8)	(27.1)
	t = 0.490	P = 0.651

Table 43. Number and mean percentage of adult coho salmon completing passage through the left and right flumes during light-conditions testing (uncovered-flume trials only). Probability value is based on a Chi-square test for side preference.

	Left flume	Right flume
Number of fish completing passage	225	183
Percentage per trial		
Mean	49.3	50.7
SD	(27.1)	(27.1)
	χ^2 = 1.966	P = 0.161

Table 44. Number and mean percentage of adult coho salmon completing passage through the left test flume during light-conditions testing. Probability value is based on a t-test.

	Direct lighting	Indirect lighting
Replicates	25	24
Number of fish completing passage (left flume)	225	200
Percentage of fish completing passage per trial (left flume)		
Mean	50.7	44.3
SD	(27.1)	(26.2)
	t = 0.831	P = 0.429

Current Development Issues

PIT-tag manufacturers are independently concentrating their research and development efforts in the 120-135 kHz frequency range. Therefore, in 1991 and 1992, Destron/IDI and NMFS investigated the feasibility of using 125 kHz rather than 400 kHz. Results from these tests showed that at 125 kHz, a stronger tag-energizing field was generated, and the RF emissions were reduced. Subsequently, NMFS prepared a new contract specifications document in 1992 that called for proposals for an extended-range PIT-tag interrogation system that operated between 120 and 134.2 kHz.

The request for proposals was placed in the Commerce Daily News, and a technical review board was formed to evaluate proposals received. The solicitation was withdrawn in 1993 by NMFS after review of the proposals and budgets by the technical review board failed to yield a satisfactory offer from either a technical or financial standpoint.

The present plan is that in 1994, NMFS will use in-house and outside resources to try several electronic approaches toward developing a successful extended-range interrogation system. The emphasis will be on designing monitors for interrogating returning adult salmon as they swim through underwater orifices or through overfall weirs. These orifices and weirs have openings smaller than 5,551 cm^2, and monitors positioned there would expose salmon to the strong EMF for only a short time. Once a new design is acceptable electronically, the biological response of fish to the design will need to be examined.

Summary, Conclusions, and Recommendations

1. In the attempt to interrogate PIT-tagged adult salmon as they volitionally ascend fish ladders, an extended-range PIT-tag monitor was designed with a large passageway opening (cross-sectional area = 5,551 cm^2). A prototype PIT-tag interrogation system that combined three of these monitors was developed and evaluated during 1989-1990.
2. Problems encountered in the development and testing of the Destron/IDI interrogation system included a) meeting FCC's RF-emissions requirements, b) equipment overheating, c) electronic noise, and d) poor tag-reading ability under field conditions.
3. The response of returning adult coho salmon to one Destron/IDI extended-range PIT-tag monitor was examined in 1990. To be able to compare the responses of fish between this larger extended-range monitor and other smaller PIT-tag monitors, the effects of adding supplemental lighting and the presence of an active EMF were examined.
4. Fish-passage ratios through the extended-range monitor were not significantly different whether the EMF was present (54.0%) or absent (50.2%). Nor were passage ratios significantly different between direct (50.7%) and indirect (44.3%) illumination of the extended-range monitor. The large opening of the monitor probably allowed enough ambient light to enter the system that the need for artificial lighting was significantly reduced.
5. PIT-tag manufacturers are independently concentrating their research and development efforts in the 120-135 kHz frequency range. Therefore, in 1991 and 1992, the feasibility of using

125 kHz rather than 400 kHz to energize the tag was investigated. Results showed that a stronger tag-energizing field could be obtained at 125 kHz while still meeting FCC emissions regulations.

6. In 1993, a request for proposals for new extended-range designs failed to generate a contract. Consequently, we decided to develop the extended-range system in-house, using outside resources. Once the new design is acceptable elecronically, we recommend that fish response to it be evaluated.

INFORMATION AND TECHNOLOGY TRANSFER

One of the functions of NMFS is to develop new technology for fisheries research and management. Once the technology is developed and is fully functional and reliable, it is transferred to other governmental agencies or to the private sector. Several aspects of the PIT-tag program (e.g., tagging system, database, and operation and maintenance of PIT-tag interrogation and separation systems) reached this level of development between 1990 and 1993. The transfer of technology requires several years of close coordination, training, and information transfer between parties.

Management and Maintenance of PIT-Tag Database and Interrogation Systems

Very large volumes of data are produced by the use of PIT tags within the Columbia River Basin. Timely management and analyses of these data require a computer database system that serves as a depository for tagging, release, and interrogation files, and that can be used for system analyses. In 1988, a cooperative agreement was made with PSMFC to develop and manage a prototype PIT-tag database. This prototype database system became functional in 1989. Continued development, refinement, and implementation of the database system took place during the 1990 field season. Based on the prototype database, a permanent Columbia River Basin database, referred to as the PIT-tag information system (PTAGIS) became operational in 1991. PTAGIS is administered by PSMFC of Portland, Oregon and is funded by BPA.

Between 1991 and 1993, NMFS started to transfer the responsibility of the operation and maintenance of PIT-tag interrogation and separation systems within the Columbia River Basin

to PSMFC. The staff of NMFS continues to provide technical training and support to PSMFC personnel. In addition, NMFS remains available to assist PSMFC in solving problems associated with any PIT-tag system.

The next step in the transfer of technology is for PSMFC to oversee the installation of new PIT-tag interrogation and separation systems within the Columbia River Basin. For example, PSMFC will be the lead agency in the installation at McNary Dam in 1994 while NMFS will assist with technical support.

In light of PSMFC's increased involvement and responsibilities, we recommend that PSMFC consider expanding its field support staff to better oversee and service PIT-tag systems within the Columbia River Basin.

Operations and Procedure Documentation

In 1990, NMFS and Destron/IDI started writing a manual to describe the operation, maintenance, and testing of PIT-tag equipment used at Columbia River Basin dams. This manual will help insure that the transfer of technology will take place in an efficient manner and will aid users in understanding and operating the equipment. The manual, "Passive integrated Transponder (PIT) Tag Identification System" (literature code 2,024), will be updated periodically. Starting in 1994, the first edition will be available from PSMFC (Pacific States Marine Fisheries Commission, 455E 82nd Drive, Suite 100, Gladstone, Oregon 97027-2522).

LITERATURE CITED

Achord, S., J. R. Harmon, D. M. Marsh, B. P. Sandford, K. W. McIntire, K. L. Thomas, N. N. Paasch, and G. M. Matthews.
1992. Research related to transportation of juvenile salmonids on the Columbia and Snake Rivers. Report to U.S. Army Corps of Engineers, Contract DACW68-84-H0034, 57 p. + Appendices. (Available from Northwest Fisheries Science Center, 2725 Montlake Blvd. E., Seattle, WA 98112-2097.)

Aldrich, T. E., and C. E. Easterly.
1987. Electromagnetic fields and public health. Environ. Health Perspect. 75:159-171.

Alexander, R. McN.
1974. Functional design in fishes. Hutchinson and Co., London, 160 p.

Amend, D. F.
1974. Comparative toxicity of two iodophors to rainbow trout eggs. Trans. Am. Fish. Soc. 103:73-78.

Ames, L. J., J. D. Felley, and M. H. Smith.
1979. Amounts of asymmetry in centrarchid fish inhabiting heated and nonheated reservoirs. Trans. Am. Fish. Soc. 108:489-495.

Bainbridge, R.
1960. Speed and stamina in three fish. J. Exp. Biol. 37:129-153.

Battle, H. I.
1944. The embryology of the Atlantic Salmon (*Salmo salar* Linnaeus). Can. J. Res. D22:105-125.

Beacham, T. D.
1990. A genetic analysis of meristic and morphometric variation in chum salmon (*Oncorhynchus keta*) at three different temperatures. Can. J. Zool. 68:225-229.

Bell, M. C.
1973. Fisheries handbook of engineering requirements and biological criteria. U.S. Army Corps of Engineers, Portland., 528 p.

Berg, O. K., and M. Berg.
1990. Effects of Carlin tagging on the mortality and growth of anadromous Arctic char, *Salvelinus alpinus* (L.). Aquacult. Fish. Manage. 21:221-227.

Bergman, P. K.
1968. The effects of implanted wire tags and fin excision on the growth and survival of coho salmon, *Oncorhynchus kisutch* (Walabaum). Ph.D. Dissertation. Univ. Washington, Seattle, Washington, 119 p.

Blanc J. M., and B. Chevassus.
1979. Interspecific hybridization of salmonid fish. I. Hatching and suvival up to the 15th day after hatching in F1 generation hybrids. Aquaculture 18:21-34.

Blankenship, H. L., and P. R. Hanratty.
1990. Effects on survival of trapping and coded wire tagging coho salmon smolts. Am. Fish. Soc. Symp. 7:259-261.

Blaxter, J. H. S.
1988. Pattern and variety in development. *In* W.S. Hoar and D.J. Randall (editors), Fish Physiology, vol. XIA, p. 1-58. Academic Press, New York.

Brown, H. D., and W. Chattopadhyay.
1988. Electromagnetic-field exposure and cancer. Cancer Biochem. Biophys. 9:295-342

Cameron, I. L., Hardman, W. E., Winters, W. D., Zimmerman, S. and A. M. Zimmerman.
1993. Environmental Magnetic Fields: Influences on early embryogenesis. J. Cell. Biochem. 51:417-425.

Chapman, P. ,F., and R. W. Rogers.
1992. Decline in iodine concentration of iodophor during water hardening of salmonid eggs and methods to reduce this effect. Prog. Fish-Cult. 54:81-87.

Denenberg, V. H.
1976. Statistics and Experimental Design for Behavioral and Biological Researchers. Hemisphere Publishing Corporation, Washington, D.C., 344 p.

Donnelly, W. A. and F. G. Whoriskey.
1991. Background-color acclimation of brook trout for crypsis reduces risk of predation by hooded mergansers *Lophodytes cucullatus*. N. Am. J. Fish. Manage. 11:206-211.

Endler, J. A.
1983. Natural selection on color patterns in poeciliid fishes. Environ. Biol. Fishes 9:173-190.

Fauch, K. D.
1991. Trout as Predator. In J. Stoltz and J. Schnell (editors), Trout, p. 65-82. Stackpole Books, Harrisburg.

Fowler, L. G. and J. L. Banks.
1990. Iodophor toxicity to eggs and fry of fall chinoook salmon. Prog. Fish-Cult. 52:176-178.

Freeman, D. C., J. H. Graham, and J. M. Emlen.
1994. Developmental stability in plants: symmetries, stress and epigenesis. Genetica 89:97-119

Hansen, D. J.
1969. Avoidance of pesticides by untrained sheepshead minnows. Trans. Am. Fish. Soc. 3:426-429.

Hargreaves, N. B., and R. J. LeBrasseur.
1986. Size selectivity of coho (*Oncorhynchus kisutch*) preying on juvenile chum salmon (*O. keta*). Can. J. Fish. Aquat. Sci. 43:581-586.

Hart J. L.
1973. Pacific Fishes of Canada. Fish. Res. Board Can. Bull. 180, 740 p.

Harvey, W. D., and D. L. Campbell.
1989. Retention of passive integrated transponder tags in largemouth bass brood fish. Prog. Fish-Cult. 51:164-166.

Hubbs, C. L., and K. F. Lagler.
1958. Fishes of the Great Lakes Region. Rev. ed. Bull. No. 26, Cranbrook Inst. Sci., Michigan, 213 p.

Jefferts, K. B., P. K. Bergman, and H. F. Fiscus.
1963. A coded wire identification system for macro-organisms. Nature 198(4879):460-462.

Kirchen R. V., and W. R. West.
1976. The Japanese Medaka, Its Care and Development. 36 p. (Available om Carolina Biological Supply Co., Burlington, NC, 27215.)

Lawler, G. H., and G. F. M. Smith.
1963. Use of colored tags in fish population estimates. J. Fish. Res. Board Can. 10:1431-1434.

Leary, R. F., and J. E. Peterson.
1990. Effects of water-hardening eggs in a betadine or erythromycin solution on hatching success, development, and genetic characteristics of rainbow trout. Prog. Fish-Cult. 52:83-87.

Lister, D. B., L. M. Thorson, and I. Wallace.
1981. Chinook and coho salmon escapements and coded-wire tag returns to the Cowichan-Koksilah river system, 1976-1979. Can. Manuscr. Rep. Fish. Aquat. Sci. 1608, 200 p.

Matthews, G. M., J. R. Harmon, S. Achord, O. W. Johnson, and L. A. Kubin.
1990. Evaluation of transportation of juvenile salmonids and related research on the Columbia and Snake Rivers, 1989. Report to U.S. Army Corps of Engineers, Contract DACW68-84-H0034, 59 p. + Appendices. (Available from Northwest Fisheries Science Center, 2725 Montlake Blvd. E., Seattle, WA 98112-2097.)

Matthews, G. M., J. R. Harmon, S. Achord, O. W. Johnson, and L. A. Kubin.
1992. Evaluation of transportation of juvenile salmonids and related research on the Columbia and Snake Rivers, 1990. Report to U.S. Army Corps of Engineers, Contract DACW68-84-H0034, 51 p. + Appendices. (Available from Northwest Fisheries Science Center, 2725 Montlake Blvd. E., Seattle, WA 98112-2097.)

Maynard, D. J.
1980. Behavioral and sensory aspects of petrochemical pollution on Pacific salmon. M.S. Thesis. Univ. Washington, Seattle, Washington, 175 p.

McCutcheon, C. S., E. F. Prentice, and D. L. Park.
1994. Passive monitoring of migrating adult steelhead with PIT tags. N. Am. J. Fish. Manage. 14:220-223.

McFarlane, G. A., and R. J. Beamish.
1990. Effect of an external tag on growth of sablefish (*Anoplopoma fimbria*), and consequences to mortality and age at maturity. Can. J. Fish. Aquat. Sci. 47:1551-1557.

Mesa, M. G., and C. B. Schreck.
1989. Electrofishing mark-recapture and depletion methodologies evoke behavioral and physiological changes in cutthroat trout. Trans. Am. Fish. Soc. 118:644-658.

Mighell, J. L.
1969. Rapid cold-branding of salmon and trout with liquid nitrogen. J. Fish. Res. Board Can. 26:2765-2769.

Munz, F. W., and W. N. McFarland.
1973. The significance of spectral position in the rhodopsins of tropical marine fishes. Vision Res. 13:1829-1874.

New, D. A. T.
1966. The culture of vertebrate embryoes. Logos Press. Academic Press, New York, 245 p.

Pacific State Marine Fisheries Commission.
1993. PIT tag specification document. Columbia River Basin PIT tag information system data source input specifications. 35 p. (Report available from Columbia Basin Fish & Wildlife Authority, 2501 SW First Avenue, Ste 200, Portland, OR 97201.)

Parker, R. R.
1971. Size selective predation among juvenile salmonid fishes in a British Columbia inlet. J. Fish. Res. Board Can. 28: 1503-1510.

Patten, B. G.
1977. Body size and learned avoidance as factors affecting predation on coho salmon *Oncorhynchus kisutch* fry by torrent sculpin, *Cottus rhotheus*. U.S. Nat. Mar. Fish. Serv. Fish. Bull. 75:457-459.

Petrosky, C. E.
1990. Estimating spring chinook parr and smolt abundance in wild and natural production areas. Status and future of spring chinook salmon in the Columbia River Basin--conservation and enhancement. 1989 spring chinook salmon workshop. Donn Park (convenor). U.S. Dep. Commer., NOAA Tech. Memo. NMFS F/NWC-187. 130 p.

Poe, T. P., H. C. Hansel, S. Vigg, D. E. Palmer, and L. A. Prendergast.
1991. Feeding of predaceous fishes on out-migrating juvenile salmonids in John Day Reservior, Columbia River. Trans. Am. Fish. Soc. 120:405-420.

Post, J. R., and D. O. Evans.
1989. Experimental evidence of size-dependent predation and mortality in juvenile yellow perch. Can. J. Zool. 67:521-523.

Prentice, E. F., D. L. Park, T. A. Flagg, and C. S. McCutcheon.
1987. A study to determine the biological feasibility of a new fish tagging system, 1985-1986. Report to Bonneville Power Administration, Contract DE-A179-83BP11982, 79 p. + Appendices. (Available from Northwest Fisheries Science Center, 2725 Montlake Blvd. E., Seattle, WA 98112-2097.)

Prentice, E. F., T. A. Flagg, C. S. McCutcheon, and D. Brastow.
1990a. PIT-tag monitoring systems for hydroelectric dams and fish hatcheries. Am. Fish. Soc. Symp. 7:323-334.

Prentice, E. F., T. A. Flagg, C. S. McCutcheon, D. Brastow, and D. Cross.
1990b. Equipment, methods, and an automated data-entry station for PIT tagging. Am. Fish. Soc. Symp. 7:335-340.

Prentice, E. F., T. A. Flagg and C. S. McCutcheon.
1990c. Feasibility of using implantable passive integrated transponder (PIT) tags in salmonids. Am. Fish. Soc. Symp. 7:317-322.

Prentice, E. F., D. J. Maynard, P. Sparks-McConkey, C. S. McCutcheon, D. Neff, W. Steffens, F. W. Waknitz, A. Jensen, L. Stuehrenberg, S. L. Downing, B. Sandford, M. Landolt, and T. W. Newcomb.
1993. A study to determine the biological feasibility of a fish tagging system 1987-1989. Report to Bonneville Power Administration, Contract DE-179-83BP11982, 131 p. + Appendices. (Available from Northwest Fisheries Science Center, 2725 Montlake Blvd. E., Seattle, WA 98112-2097.)

Quinn, T. P., and C. Groot.
1983. Orientation of chum salmon (*Oncorhynchus keta*) after internal and external magnetic field alteration. Can. J. Fish. Aquat. Sci. 40:1598-1606.

Quinn, T. P., R. T. Merrill, and E. L. Brannon.
1981. Magnetic field detection in Sockeye Salmon. J. Exp. Zool. 217:137-142.

Rand, G. M., and S. R. Petrocelli.
1985. Fundamentals of Aquatic Toxicology. Hemisphere Publishing Corp. and McGraw-Hill International Book Company, New York.

Refstie, T., and T. Gjerdem.
1975. Hybrids between salmonid species. Hatchability and growth rate in the freshwater period. Aquaculture 6:333-342.

Rugh, R.
1954. The effects of various levels of x-irradiation on the gametes and early embryos of *Fundulus heteroclitus*. Biol. Bull. (Woods Hole) 107:319-320

Saunders, R. L., and K. R. Allen.
1967. Effects of tagging and of fin-clipping on the survival and growth of Atlantic salmon between smolt and adult stages. J. Fish. Res. Board Can. 14:2595-2611.

Schreck, C. B., Whaley, R. A., Bass, M. L., Maughan, O. E. and M. Solazzi.
1976. Physiological responses of rainbow trout (Salmo gairdneri) to electroshock. J. Fish. Res. Board Can. 33:76-84.

Sigismondi, L. A., and L. J. Weber.
1988. Changes in avoidance response time of juvenile chinook salmon exposed to multiple acute handling stresses. Trans. Am. Fish. Soc. 117:196-201.

Vigg, S., and C. C. Burley.
1991. Temperature-dependent maximum daily consumption of juvenile salmonids by northern squawfish (*Ptychocheilus oregonensis*) from the Columbia River. Can. J. Fish. Aquat. Sci. 48:2491-2498.

Wood, C. C.
1986. Dispersion of common merganser (*Mergus merganser*) breeding pairs in relation to the availability of juvenile Pacific salmon in Vancouver Island stream. Can. J. Zool. 64:756-765.

Zar, J. H.
1974. Biostatistical Analysis. Prentice Hall, Englewood Cliffs, N.J., 620 p.

Zaret, T. M.
1972. Predators, invisible prey, and the nature of polymorphism in the Cladocera (Class Crustacea). Limnol. Oceanogr. 17:171-184.

ACKNOWLEDGMENTS

Support for this research came from the region's electrical ratepayers through the Bonneville Power Administration.

We are grateful to Rex Baxter, Tim Wick, Bill Spurgeon, and Brad Eby of the U.S. Army Corps of Engineers and their crews, without whose assistance some field work could not have been conducted.

In addition, we would like to express our appreciation to personnel of the NMFS Pasco Field Station Mechanic Shop and the NMFS Seattle Electronic and Mechanic Shops.

APPENDIX A

Outmigrant Recovery and Growth of Overwintering Juvenile Coho Salmon (*Oncorhynchus kisutch*) Marked with Sequential Coded-Wire and Passive-Integrated-Transponder Tags

by

N. Phil Peterson[1], Earl F. Prentice[2] and Thomas P. Quinn[1]

School of Fisheries, University of Washington, Seattle, Washington 98195.
Northwest Fisheries Science Center, National Marine Fisheries Service. 2725 Montlake Boulevard East, Seattle, Washington 98112.

Abstract

Wild juvenile coho salmon (*Oncorhynchus kisutch*) were marked with either' sequential coded-wire (s-CW) tags or passive integrated transponder (PIT) tags to assess possible. differences between tag types in growth and survival from fall to spring in a natural stream. Overall survival, estimated from recovery of outmigrants, varied between years (25.4% in 1990-91 season and 42.1% in 1991-92) but there was no effect of tag type on apparent survival in either year. Weight gain from fall until emigration from the stream the following spring also varied between years (4.55 g in 1990-1991 season and 6.01 g in 1991-l 992) but there was no effect of tag type on growth. Differences in survival and growth were not detected in even the smallest size class tagged (< 70 mm). We conclude that coho salmon as small as about 2.8 g and 65 mm fork length can be marked with both s-CW and PIT tags without significant reduction in growth or survival.

Introduction

Studies of fish growth, survival, migration and other forms of behavior routinely require marking of the fish and a wide variety of techniques are available (Parker et al. 1990) for field and laboratory studies. The choice of mark often necessitates a compromise among features including cost of the mark itself, cost of data retrieval, minimum size of fish that can be marked, effects on growth and survival, longevity of the mark, visibility and other factors. Many techniques have been developed or applied to marking juvenile salmonids. Among the most prevalent mass-marking techniques is the coded wire (CW) tag (Northwest Marine Technology, Inc.) (Johnson 1990). These 1.1 mm long tags, inserted into the cranial cartilage of juvenile salmonids, generally are used to identify large groups of fish released from a particular hatchery in a given year. However, the tags can be manufactured to contain sequential codes (sequential or s-CW herein) that can be used for studies where individual recognition is required.

In Pacific salmon (*Oncorhynchus* spp.), the presence of the CW tag is typically indicated by excision of the adipose fin. However, recovery of information from the tag requires that the fish be sacrificed. In cases where the population is in jeopardy, this sacrifice may not be acceptable. Increased concern regarding the status of many salmonid populations (Nehlsen et al. 1991) provides impetus for the use of non-lethal tagging techniques. An alternative to the s-CW tag is the passive integrated transponder (PIT) tag (Prentice et al. 1990a). This tag (11 mm long, 2.1 mm diameter) consists of an integrated circuit chip and an antenna encapsulated in a glass tube, and is injected ventrally into the fish's body cavity. The tag is detected and its unique code read electronically, making the data available to the user immediately without having to sacrifice the fish. Laboratory studies revealed no effect of the PIT tag on growth, survival or swimming performance of juvenile chinook salmon (0. *tshawytscha*), sockeye salmon (0. *nerka*) and steelhead trout (0. *mykiss*) about 70-l 00 mm long (Prentice et al. 1990a). Studies on the Columbia River indicated that the survival of PIT-tagged chinook salmon and steelhead was comparable to

controls or fish marked with freeze brands. However, the tests were of short duration (14 d) and survival of a!! groups was very high (ca. 80-100%; Prentice et al. 1990a).

Concerns regarding the effects of forestry and other land-use practices on salmonid populations (Salo and Cundy 1987; Meehan 1991; Naiman 1992) have encouraged researchers to precisely define the relationships between physical habitat changes, density dependent factors, and climatic factors on salmon growth and survival (e.g., Holtby and Scrivener 1989). Studies at Carnation Creek, British Columbia revealed that interannual variation in over-winter survival of coho salmon (*O. kisutch*) was correlated with the mean length of the fish at the end of the summer (Hartman et a!. 1987). To study the effects of summer growth and rearing habitat on coho salmon populations, we wished to measure the growth and survival of individual coho salmon from the end of the summer to the smolt stage. This requires unique marks on small fish. This paper reports an evaluation of the suitability of PIT and s-CW tags for assessing growth and apparent survival, inferred From outmigrant recovery, of wild coho salmon in a natural environment.

Materials and Methods

Our research was carried out in Big Beef Creek, a small (18 km) stream draining into Hood Canal from the Kitsap Peninsula, Washington. From l-5 October, 1990 and 1991, wild coho salmon were seined from pools in Big Beef Creek below Lake William Symington. The salmon were anesthetized with MS-222, weighed (+/- 0.1 g), measured (fork length, +/- 1 mm) and randomly assigned to receive either a s-CW or PIT tag. PIT tags were inserted with hand-held 12-gauge hypodermic needle and modified syringe (Prentice 1990b). After excision of the adipose fin, s-CW tags were implanted with hand-held 24 gauge hypodermic needle and modified syringe. The s-CW tags were pre-loaded into a supply of needles each evening for the next day. Adjacent tags (preceding and following the one implanted) were retained in solidified silicone gel for later reading to accurately identify the tag of interest after recovery. Similar numbers of fish received each

type of tag from each pool, though the overall numbers tagged varied among pools. A!! fish were returned to the pools where they had been collected, usually within 30-60 min of capture.

A weir is operated above the mouth of the stream and coho salmon smolts generally leave between 15 April and 15 June (Washington Department of Fisheries [WDF], unpublished data). During this period, a!! coho salmon are normally captured, anesthetized, and tagged with conventional (i.e., not sequential) CW tags by WDF staff every year, Most coho salmon reside in the stream for one year, hence we checked a!! smolts for tags in 1991 and 1992. The PIT tags were detected with a Destron/IDI hand-held interrogator and also passed through a stronger, dual coil, in-line pipe detector (Biomark, Inc.), and then released. The presence of s-CW tags was indicated by the missing adipose fin. The. fish was sacrificed and the tag was located and removed with the aid of a Northwest Marine Technology magnetic field sampling detector.

Individual growth was determined by the difference between fall and spring lengths and weights, Survival was estimated by the proportion of fish tagged in the fall that were recovered in spring. It is possible that some coho salmon migrated downstream before or after the smolt sampling period but we could not distinguish such unrecovered fish from mortalities. We assumed that such aberrations in migration timing would be rare and unbiased with respect to tag type, except as revealed by growth differences. We recovered seven age 2 smolts that had been marked in 1990 (three s-CW and four PIT tagged). Of the parr marked in 1991, no s-CW tagged individuals were recovered as age 2 smolts (they were not examined for PIT tags). Age 2 smolts were omitted from analysis because of their rarity and the difficulties in comparing their survival to that of age 1 smolts.

Results and Discussion

The average size of the fish at the time of tagging differed between years (74.1 vs. 76.8 mm, $t = 6.73$, $P < 0.001$; 4.2 vs. 5.2 g, $t = 13.29$, $P < 0.001$, in the 1990-91 and 1991-92 seasons, respectively) but did not differ between tag types in a given year ($P > 0.05$ for length and weight in each year). Overall apparent survival also varied between years (25.4% in the 1990-91 season vs. 42.1% in the 1991-92 season, $X2 = 43.77$, $P < 0.001$). As a result of the interannua! variation, we analysed each year's data on growth and apparent survival separately. There were no differences in length or weight of smolts between tag groups in either year (1990-91: length: $t = 0.08$, $P = 0.93$; weight: $t = 0.23$, $P = 0.82$; 1991-1992: length: $t = 0.32$, $P = 0.75$; weight: $t = 0.52$, $P = 0.61$). The proportions of PIT and s-CW tagged fish recovered did not differ in either year (1990-91: $X2 = 2.87$ $P = 0.09$; 1991-92: $X2 = 0.04$, $P = 0.84$; Table 1).

While there was no overall effect of tag type on growth or recovery, we were concerned that the lack of effect in large salmon might have masked an effect in smaller fish. We therefore separated the data into three size-classes of fish: < 70, 70-79, and >79 mm. Chi-square test revealed no difference in recovery between tag types in either year in any of the three size-classes, ($P > 0.05$ in a!! cases). Differences in weight gain of up to 1.1 g were observed between tag types within size classes but the differences were not significant (standard deviations were ca. l-3 g) and even the smallest size class showed no effect; s-CW-tagged fish gained 5.6 and 5.8 g in the two years, compared with 4.5 and 6.2 g for the PIT-tagged fish. Coho salmon as small as 58 mm and 2.4 g (PIT tag) and 56 mm and 2.3 g (s-CW tag) at the time of tagging were recovered as smolts. Thus for coho salmon larger than about 65 mm total length and 2.8 g, no difference in growth or survival between tag types was apparent over 7 months in a stream with significant natural mortality. This supports earlier findings (Prentice et a!. 1990a) regarding the suitability of PIT tags for salmonids of this size.

While the overall results clearly showed no effect of tag type on growth and recovery, some adjustment of the data was necessary. We held 58 fish for 72 h and no PIT or s-CW tags were lost during this time period. However, 3% of the smolts recovered with missing adipose fins did not have s-CW tags. Close examination of these fish and comparison with fish bearing tags indicated that the fins had been clipped and were not natural vestigial adipose fins. We adjusted the estimate of recovery/survival to reflect this level of tag loss. The adipose fins of the PIT tagged fish were not removed so no such adjustment was made. During the first 15 d of the 1991 smolt season, detection of PIT tags was hampered by exclusive use of a single, hand-held detection system. Subsequent use of a dual coil, in-line system indicated that the hand-held system detected 80% of the tags. In making survival comparisons, we expanded PIT tag recoveries during this 15 d time period to account for undetected fish. This adjustment increased the estimated recovery by only 4 fish and did not alter the statistical conclusions.

In addition to the problems of tag loss and detection associated with the two types of tags, other positive and negative attributes of the two types of tags became apparent during the study. The s-CW tag is suitable for smaller fish than the PIT tags (Buckley and Blankenship 1990). The PIT tags are initially more costly (ca. $3-5/tag vs ca. $ 0.05/tag for s-CW tags in quantities of 100,000). The amount of time required to insert the tags was comparable: about 5-15 sec/tag after the fish had been anesthetized. However, the PIT tag data are retrieved in real time with an electronic device and are immediately available for analysis. In contrast, the s-CW tag must be located, dissected from the fish and read visually under a microscope (ca. 3 min/tag). Unless this is done at the time of capture, the fish must be identified, preserved and stored for subsuquent processing. Moreover, the manufacture of the s-CW tag is such that tags on either side of the one that is implanted must be retained and read to identify the individual fish. This additional procedural requirement necessitates retention and storage of large numbers of tags in an

ordered sequence. On balance, the PIT tag seems particularly suitable if sacrifice of the fish is not acceptable and a substantial initial cost outlay in tags is tolerable.

Acknowledgements

Shelly Spalding, Andrew Hendry, David Brastow, Larry Dominguez, Gordy George and Coleman Bymes assisted with the collection and tagging, Steven Neuhauser and Clair Landry of the Washington Department of Fisheries assisted with the smolt sampling, and Deborah A. Frost and David M. Damkaer (National Marine Fisheries Service) provided useful comments on the manuscript. This research was supported by the Washington Department of Natural Resources through the Timber-Fish-Wildlife agreement, the United States Forest Service and Bonneville Power Administration.

References

Buckley, R. M. and H. L. Blankenship. 1990. Internal extrinsic identification systems: overview of implanted wire tags, otolith marks, and parasites. American Fisheries Society Symposium 7: 173- 182.

Hartman, G., J. C. Scrivener, L. B. Holtby and L. Powell. 1987. Some effects of different streamside treatments on physical conditions and fish population processes in Carnation Creek, a coastal rain forest stream in British Columbia. Pages 330-372 in E. 0. Salo and T. W. Cundy, editors, Streamside management: forestry and fishery interactions. College of Forest Resources, University of Washington, Seattle, Washington.

Holtby, L. B. and J. C. Scrivener. 1989. Observed and simulated effects of climatic variability, clear-cut logging, and fishing on the numbers of chum salmon *(Oncorhynchus keta)* and coho salmon *(0. kisutch)* returning to Carnation Creek, British Columbia. Canadian Special Publication of Fisheries and Aquatic Sciences 105:62-81.

Johnson, J. K. 1990. Regional overview of coded wire tagging of anadromous salmon and steelhead in northwest America. American Fisheries Society Symposium 7:782-816.

Meehan, W. R. 1991. Influences of forest and rangeland management on salmonid fishes and their habitats. American Fisheries Society Special Publication 19.

Naiman, R. J., editor. 1992. Watershed management: Balancing sustainability and environmental change, Springer-Verlag, New York.

Nehlsen, W., J. E. Williams, and J. A. Lichatowich. 1991. Salmon at the crossroads: stocks at risk from California, Oregon, Idaho, and Washington. Fisheries 16(2):4-21.

Parker, N. C., A. E. Giorgi, R. C. Heidinger, D. B. Jester, E. D. Prince, and G. A. Winans, editors. 1990. Fish-marking techniques. American Fisheries Society Symposium 7.

Prentice, E. F., T. A. Flagg and C. S. McCutcheon. 1990a. Feasibility of using passive integrated transponder (PIT) tags in salmonids. American Fisheries Society Symposium 7:317-322.

Prentice, E. F., T. A. Flagg, C. S. McCutcheon, D. F. Brastow and D. C. Cross. 1990b. Equipment, methods, and an automated data-entry station for PIT tagging. American Fisheries Society Symposium 7:335-340

Salo, E. 0. and T. W. Cundy, editors. 1987. Streamside management: Forestry and fishery interactions. College of Forest Resources, University of Washington, Seattle, Washington.

Table 1. Survival and growth from tagging in fall to recapture the following spring of juvenile coho salmon marked with passive integrated transponding (PIT) and sequential coded wire (s-CW) tags in Big Beef Creek, Washington,

				Mean length mm (SD)		Mean weight g (SD)	
Season	Tag	# tagged	survival	fall	spring	fall	spring
1990-91	PIT	358	22.6%	74.6 (7.3)	96.4 (7.1)	4.17 (1.44)	8.99 (2.01)
	s-CW	359	28.1	73.6 (7.8)	96.5 (8.8)	4.15 (1.45)	9.07 (2.39)
1991-92	PIT	340	41.4	77.2 (7.2)	105.5 (7.7)	5.26 (1.46)	11.36 (2.53)
	s-cw	334	41.8	76.4 (7.5)	105.2 (7.5)	5.15 (1.49)	11.21 (2.45)

APPENDIX B

Extended-range fish monitor system description

by

Destron/IDI
2545 Central Avenue
Boulder, Colorado 80301
Literature #8601

Extended Range Fish Monitor System

I. Background

A system for monitoring outmigrant juvenile salmonids was completed and considered operational in 1988. The juvenile system utilized detector coils wound around pipes in the collection systems at dams on the Columbia and Snake rivers. Round pipes, up to 12" in diameter, and pipes with rectangular cross section up to 6" X 18" were used. When the juvenile systems were tested with larger detector coils, the system efficiency decreased. The juvenile equipment was used to detect passage of adult salmon, but this was done at traps where the fish were shunted through 12" pipes. It was apparent that detection of adult fish in passageways of 2' X 2' and larger would require a different detection system.

A system was designed, a prototype system fabricated, and tests were run in the oval flume at Pasco ("the 1988 System Tests"). Initial tests showed that the power to the detector coils was too low and that the cabling to the detector loops needed improvement. After the improvements were added to the system, a second set of tests were run. When the system was operated at full power, a return signal preamp overloaded, and detection was poor. When the power was decreased about 15%, fish were detected with an efficiency of better than 90%. Since that time, an improved return signal amplifier has been designed and tested, and development of a higher power amplifier was started.

II. System Description

Figure 1 shows a block diagram of the Extended Range Fish Monitor system.

The Industrial Controller is a multi-channel device which controls up to four exciter/receiver pairs by time division multiplexing. The controller enables each exciter sequentially and checks for the presence of a return signal from the receive loop. If a signal is present the controller dwells at that location until an ID has been detected or the enable signal times out. If no return signal is detected the controller changes to the next channel. Detected ID numbers arc stored temporarily and transmitted out to a host computer or printer via a serial communications link. Further details are available in the Controller manual, Document No. 825-0075-301.

The Power Interface contains an exciter board which receives the enable signal from the Controller and tums on an excitation signal to the Power Amplifier. The Power Amplifier boosts the signal power up to 500 watts and returns the boosted signal to a Tuner/Transformer board in the Power Interface. The Tuner/Transformer contains switchable capacitors for varying the loop tuning, and a transformer to match the amplified output to the loop. The boosted excitation signal is fed out to the exciter loop and the tuning capacitor via low loss coaxial cable.

The Exciter Ioop is a customer-supplied assembly consisting of seven turns of a large diameter wire in a waterproof (submersible) frame with a 2' X 3' fish passage in the center of the loop. The Receive loop is housed in the same enclosure, but is 75 turns of small diameter wire. The Exciter and Receive loops may be positioned as shown in Figure 2 or in Figure 3 .

Transponder return signals are sensed by the Receive loop, amplified in the Return Signal Preamp, and fed to the Controller, where the signal is demodulated, decoded, and made available to the host computer or printer. Up to four separate exciter/receiver pairs may be served by the Controller. Only one exciter/receiver pair is activated at a time to help control unwanted radio emissions.

A "double read" is implemented in the controller firmware, meaning that each transponder is read twice and the 113s compnrcd before being transmitted to the host.

Fish velocities must be slower than in the juvenile system. Five feet per second is the maximum speed for the Extended range system..

III. Description of the System Components

1. Exciter Loop

The Exciter Loop is a scvcn-turn rectangular loop enclosed in a nominal 2' X 3' waterproof housing. Figure 4 shows a sketch of the assembly. The wire is #10 AWG stranded tinned copper wire with 1000 volt insulation wound on a wood or plastic frame, The seven turns are spaced 1 inch apart, and arc spaced at least 1 1/2" from the outside walls of the enclosure, so that the water will be 1 1/2" away from the wires. A tuning capacitor assembly (Part no. 800-0124-00) is attached to the loop windings as shown in Figure 5, Exciter loop schematic. A coaxial cable, part of the tuning capacitor assembly, exits the loop assembly housing through a waterproof fitting. The housing, loop and waterproof fitting are customer supplied items.

2. Receive Loop

The rcccivc loop is a 75 turn rectangular loop enclosed in a nominal 2' X 3' waterproof housing which may be identical to the housing used for the exciter loop. The wire is 22-24 AWG stranded tinned copper wire with 300 volt minimum insulation. Figure 6 shows a sketch of the assembly. The ends of the loop windings are connected to a 20 foot coaxial signal cable, which exits the loop assembly housing through a waterproof fitting. The entire assembly is customer supplied.

3. Tuning Capacitors (800-0124-00)

The tuning capacitor consists of a printed circuit board (710-0089-00) containing 20 .01 µF silver mica capacitors. This assembly is potted in a plastic enclosure, with a 20 ft. length of 50 ohm coaxial cable extending out of the enclosure to carry the cxci tation signal from the Power Interface Unit

Figure 7 shows the outline drawing of the tuning capacitor.

4. Power Interface (800-0122-00)

The Power Interface contains two PC boards, a power adjustment, and a tuning switch for switching in different values of capacitance in order to fine tune the loops. One PC board is an Exciter (700-0056-16) which furnishes a crystal controlled 419.43kHz to the input of the power amplifier through the power adjustment. The second board is a tuner/transformer board (7 10-0088-00) which contains capacitors for varying the loop tuning, and a transformer to match the amplifier to the load. The capacitors are connected to the tuning switch on the front panel. Power for the unit (12VDC) is obtained from the Industrial Controller. An outline drawing of the unit is shown in Figure 8 and a functional diagram in Figure 9.

5. Power A mplifier (803-0001 -00)

The Power Amplifier is an Electronics Navigation, Inc. (ENI) 1040L capable of providing 500 watts into a 50 ohm load at. 419kHz. A front panel meter shows forward power or load power depending on the positions of the meter switch. If the load is mismatched, power will bc reflected. If the reflected power exceeds 70 watts, the 10401, will automatically cut-out and the overload lamp will light. In order to reset, the input signal should bc reduced (turn the POWER adjustment on the Power Interface counter clockwise) and the OVERLOAD button should be depressed.

The ENI 1040L will operate from either 1 15VAC or 230VAC, 50-60Hz, 1500 watts maximum. At 1 15VAC a 15 amp line fuse is used, at 230 VAC an 8 amp fuse is used. An outline drawing is shown in Figure 10. Further details arc contained in the ENI Instruction Manual.

6. Receive Amplifier (SOO-0 128-00)

The Receive Amplifier contains an amplifier circuit hoard and a power supply The amplifier circuit board (7 10-0091-00) contains bandpass filters and amplifiers to amplify the transponder return signal from the receive loop. A 24 volt DC power supply provides power to the amplifier board, and requires 1 15VAC 50-60Hz at 1 amp to operate. An outline drawing of the Receive Amplifier is shown in Figure 11.

7. Industrial Controller (800-0075-04)

The Industrial Controller is used in several applications. The last two digits of the part number (-04 in this case) represent a version number for a particular application. The version (04) used in the Extended Range Fish Monitor system has differences as follow:

a. the microprocessor clock crystal is changed from 4.00mHz to 4.1943mHz.

b. components in the return signal filtering arc changed.

c. the return lines (commons) from all of the DC power supplies arc tied together.

d. the firmware is 645-0087-00, Rev. A.

The Industrial Controller requires up lo 2 amps at 115VAC. An internal DC supply (-I- 5V and -1-12) powers the Industrial Controller PC board. A second 12VDC supply is included to supply power to external exciters and scanners. An outline drawing of the Industrial Controller is shown in Figure 12.

Further details arc contained in the Industrial Controller Manual.

8. Installation Wiring

Installation wiring details arc shown in Figure 14.

3 . System Power

Isolation transformers and line filters are supplied by the customer, The isolation transformer is necessary to control the Fish Monitor System grounding, and to provide isolation for conducted emissions in both directions. For a typical system, having four exciter loops and four Power Amplifiers, 75 amp service is required. The transformer and breaker panel should be located close to or in a shielded equipment room containing the Power Amplifier, Power Interface units, and Rcccivc Amplifier. The safety ground at the Transformer secondary should be connected to the room shield and to station ground (earth ground). A three-phase transformer may be used, but the load will always be unbalanced, because the Power Amplifiers arc not all providing power at the same time. Each is enabled sequentially by the Controller for a brief period (2-75 milliseconds). The power outlets for all of the system components must of course bc grounded outlets. The ground should bc the station ground to which the room shield is attached.

In addition to the isolation transformer, a line filter must he provided for each power amplifier. A Corcom 20VW 1 or equivalent is preferred.

IV. Emission Control and Measurements

A. Scope:

There are several issues relating to the electromagnetic fields produced by the Extended Range Fish Monitor System, as follow:

1. Radio Emissions and Interference, as regulated the the Federal Communication Commission (FCC) or National Telecommunications and Information Administration (NTIA).

2. Human Safety levels of Electromagnetic fields per American National Standards Institute (ANSI) (X5.1-1982.

3. Fish Health Effects

4. Fish Behavioral Effects

These issues arc discussed in the following paragraphs.

B. Radio Emissions and Interference

Prior products marketed by Destron/IDI have been certified (a certification was issued by the FCC) or were approved by the NTIA for use at certain specific sites (for use under low powered communication rules).

It appears that the Extended Range System will exceed the emissions allowed under low powered communication rules, unless extensive and expensive shielding is added around the loops, For instance, the field allowed at 300 meters distnncc is 5.7 microvolts per meter at 419kHz. The calculated emission level from the actual equipment is one to two millivolts per meter, with no shielding.

If shielding is added, as shown in Figure 13, the emissions might be decreased 25 lo 30db, to a level of 100 microvolts per meter at 300 meters. This is still a factor of about 18 higher than permissible under low power rules.

C. Safety Levels

Wc refer to ANSI C95.1- 1982 on safety levels of RF Electromagnetic fields. The level for magnetic fields is given as 2.5 amperes squared per meter squared. The square root of this value is 1.58 amperes per meter, which wc take to be the practical limit to conform to the spirit and letter of the standard, for whole body exposure over long periods of time.

The magnetic field, H can be calculated easily for some simple cases. For a bundle of straight wires, the value is:

$$H=(NI)/(2\pi R)$$

N= number of conductors in bundle
I= current in amperes in each wire
R= distance from wire in meters

For a circular loop, the value at the center of the loop is

$$H=(NI)/(2R)$$

For a loop, values along the axis of the loop can be calculated from

$$H=(N I a^2)/[2(a^2 + z^2)^{3/2}]$$

a= radios of loop in meters
z= distance from ccntcr of loop in meters.

Some sample calculations for an adult loop are shown as follow, where the loop is assumed circular with a radius of 0.6 mctcrs:

at the center of the loop

$$H=(7x10)/(2x0.6)=58 \text{ amperes/meter}$$

at 1 meter from center

$$H=(7x10x0.6^2)/[2(1^2+0.6^2)^{3/2}]=7.9$$

at 2 meters from center

$$H=(7x10x0.6^2)/[2(2^2+0.6^2)^{3/2}]=1.38$$

The foregoing values are the peak values. The equipment is operated with a 20% duty cycle, so that the field averaged over an interval is 1/5 the peak value. The average field in the center of the loop is 58/5 = 11 .6 amperes/meter, which is well above the ANSI limit for whole body exposure. We should not work or ask others to work in the area of the center of the loop. Wc consider it prudent to limit access to the loop assembly lo outside a 2 meter distance, unless the loop is shielded.

Local fields inside the loop, but away from the center near the wires are considerably higher than the values above. The whole body exposure for a fish at the very edge of the loop (two inches from the wires) would be about 100 amperes/meter peak, or 20 amperes/meter average. The ANSI standard specifies an averaging time of 6 minutes, so that a fish which lingers for more than about 30 seconds as close as possible to the loop edge has been subjected to a magnetic field above the ANSI limit for chronic human exposure.

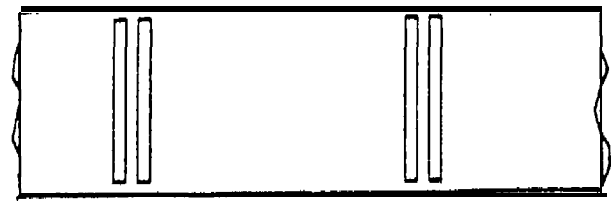

TopView

Up (Typically)

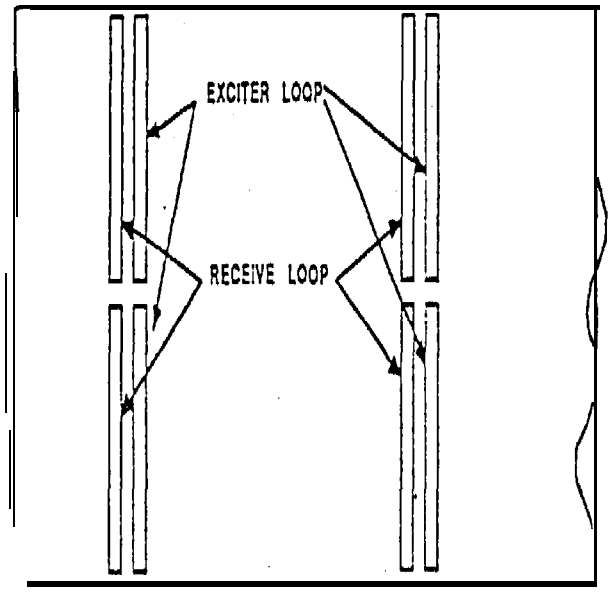

Side View

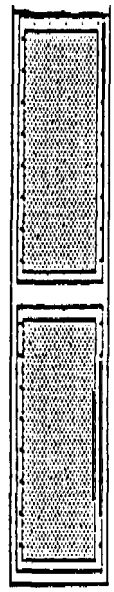

End (Opening) View

DETECTOR LOOP LAYOUT
EXTENDED RANGE FISH MONITOR

Figure 2

2' X 6' Channel

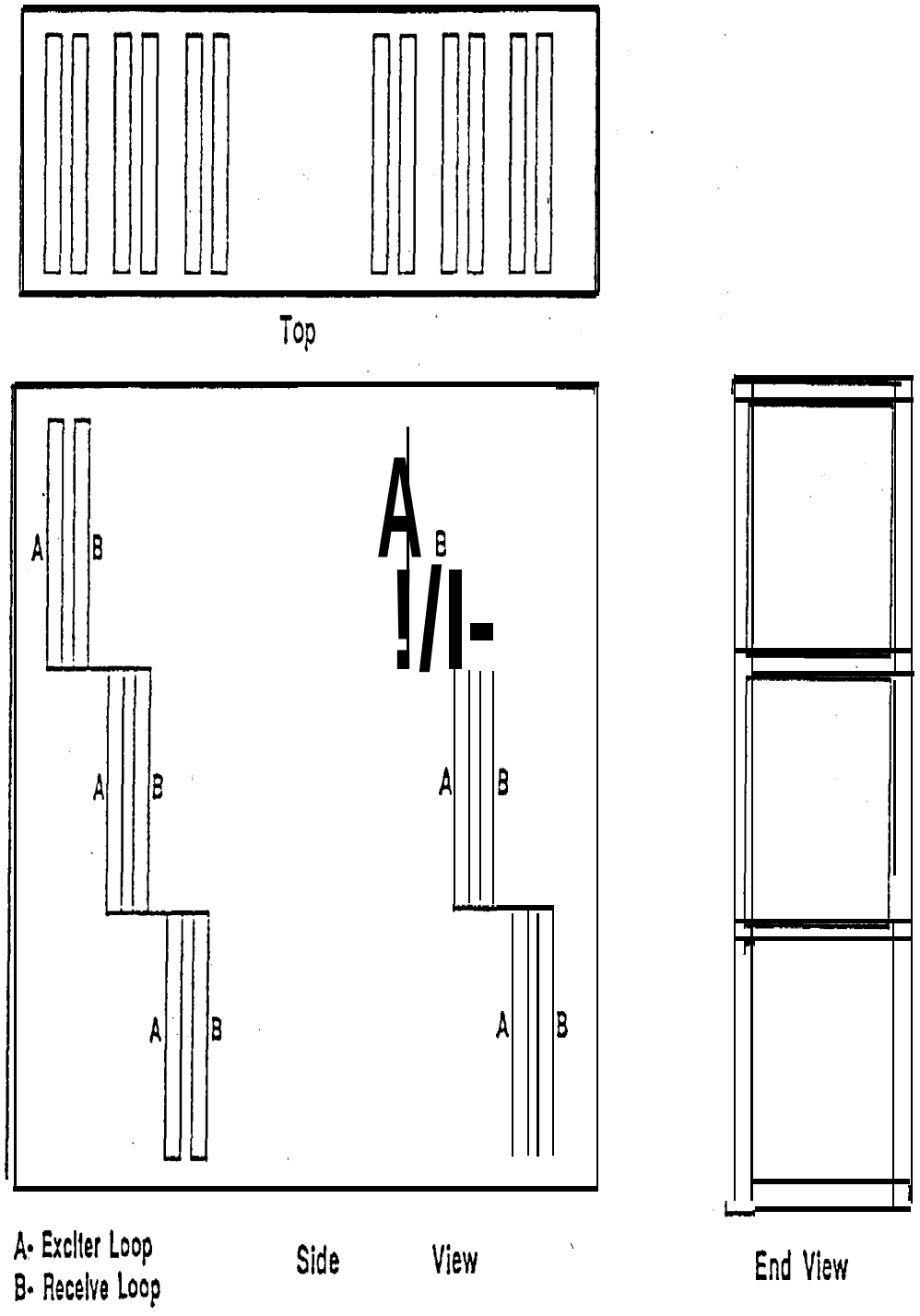

Figure 3
Detector Loop Layout, 3' X 6' Channel

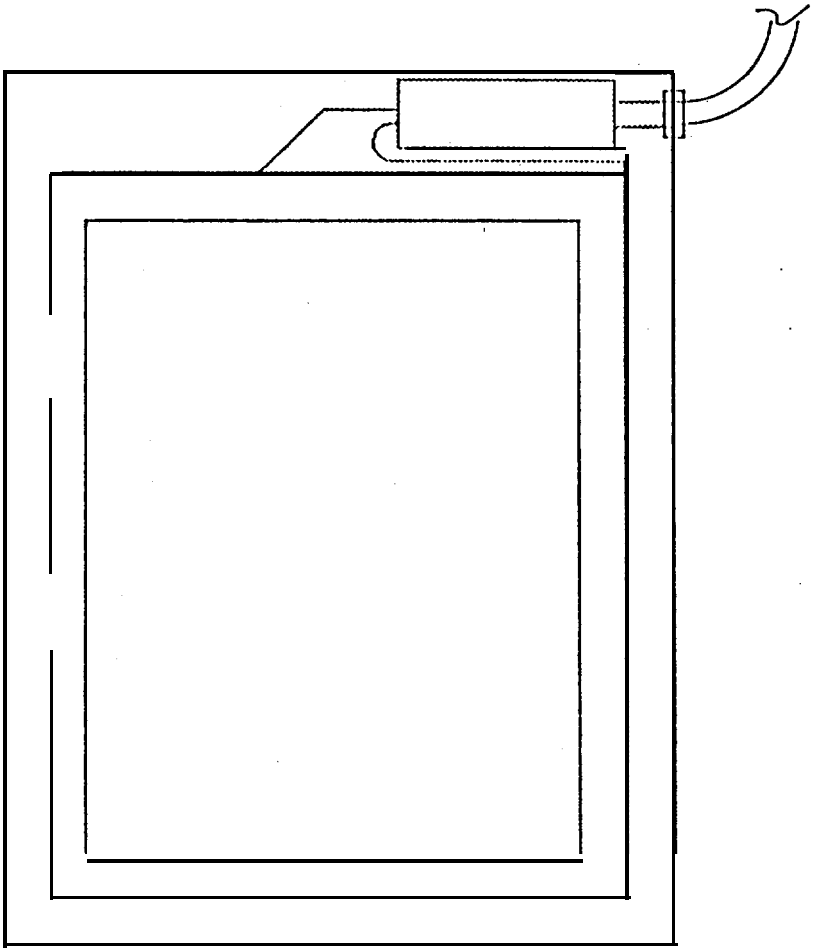

End View
Cross Section of Waterway

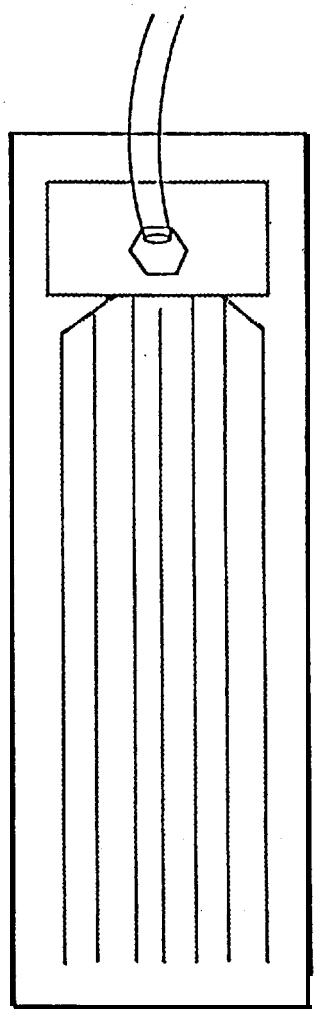

Side View

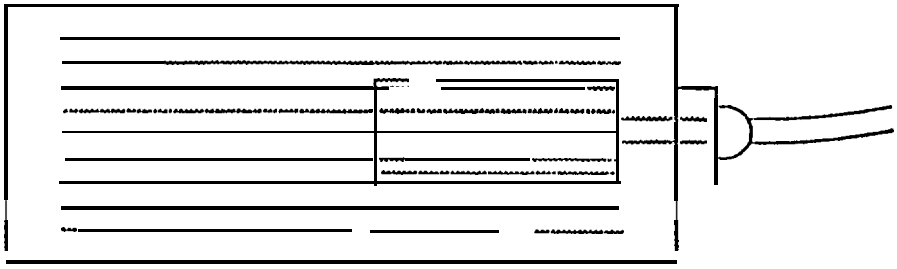

Top View

Figure 4
Exciter Loop Assembly

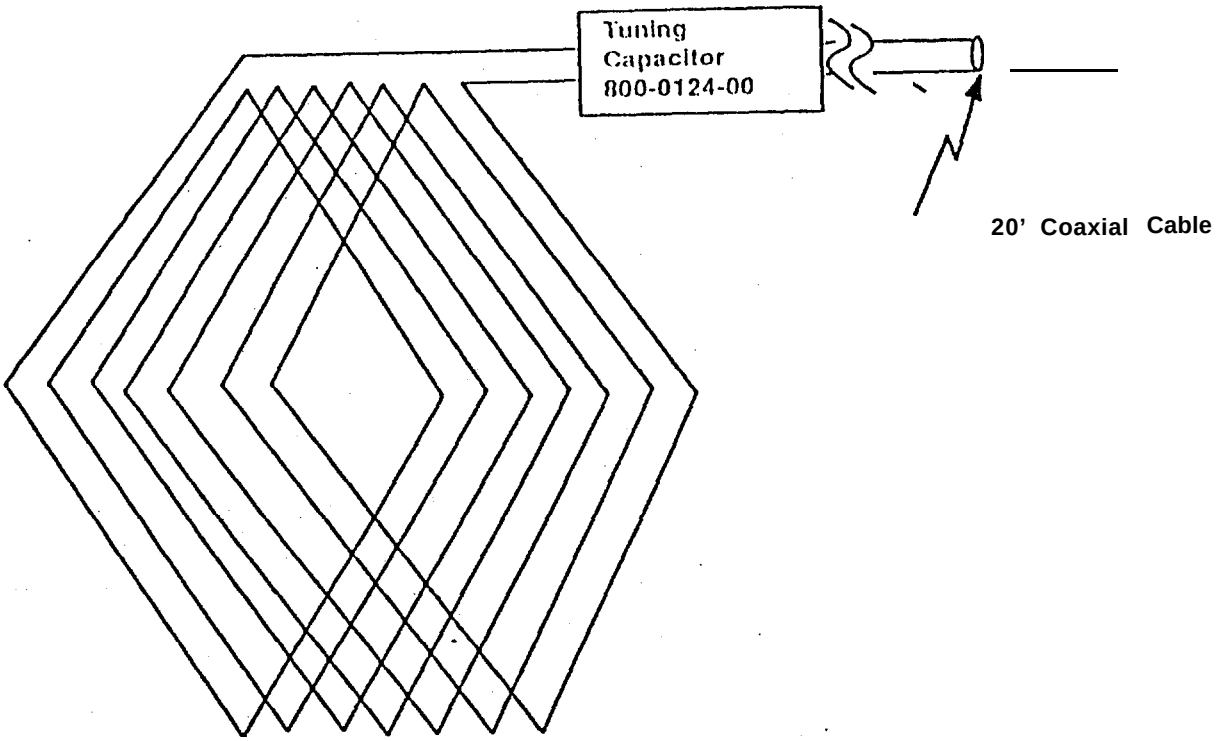

Figure 5
Exciter Loop schematic

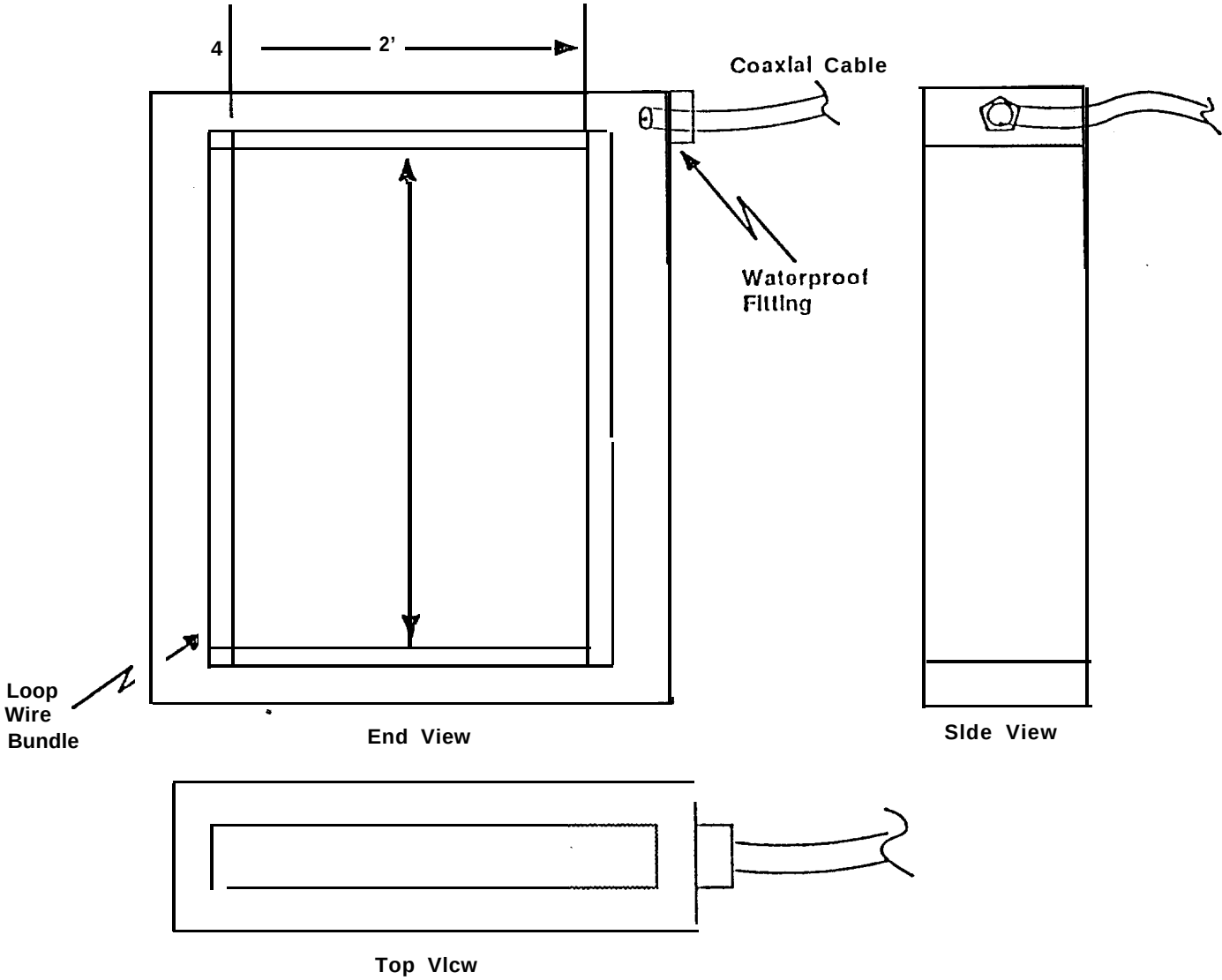

Figure 6
Receive Loop Assembly

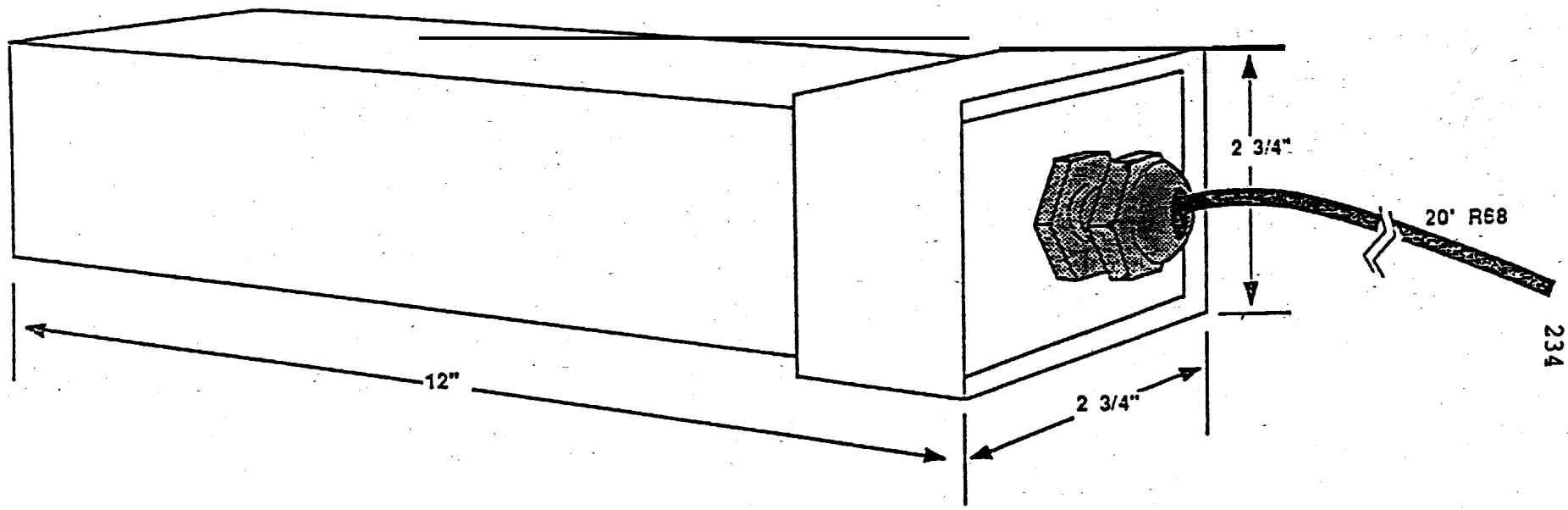

Figure 7
Tuning Capacitor

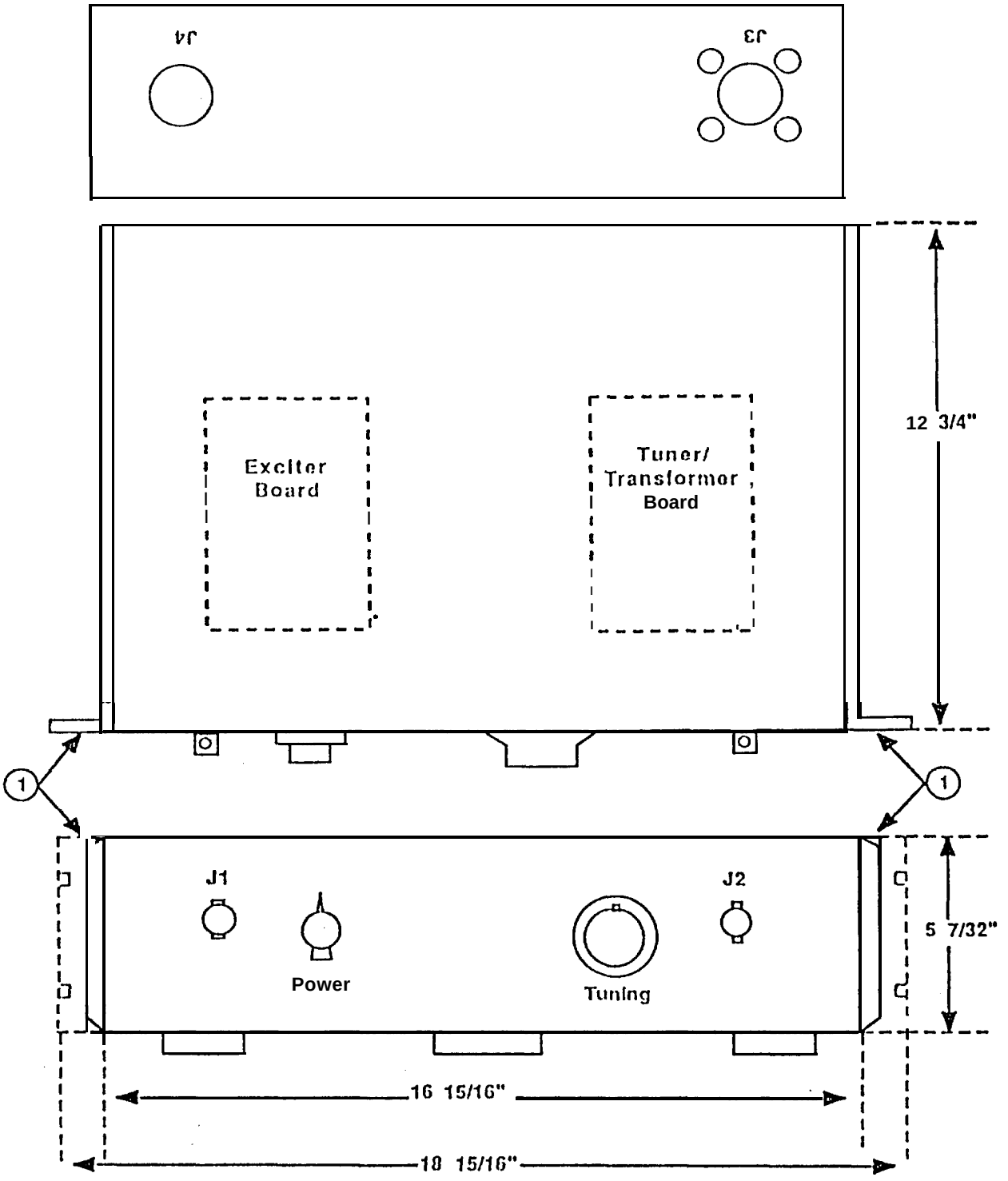

(1) Optional Rack Mounting Hardware
J1 Is Exciter signal. Connect to Input of Power Amp.
J2 Is Amplified Signal Input. Connect to Output of Power Amp.
J3 Is Output Signal to Loop Assembly.
J4 Is Strain Relief for Cable from Controller.

Figure 8
Power Interface Unit
(300-o-l22-00

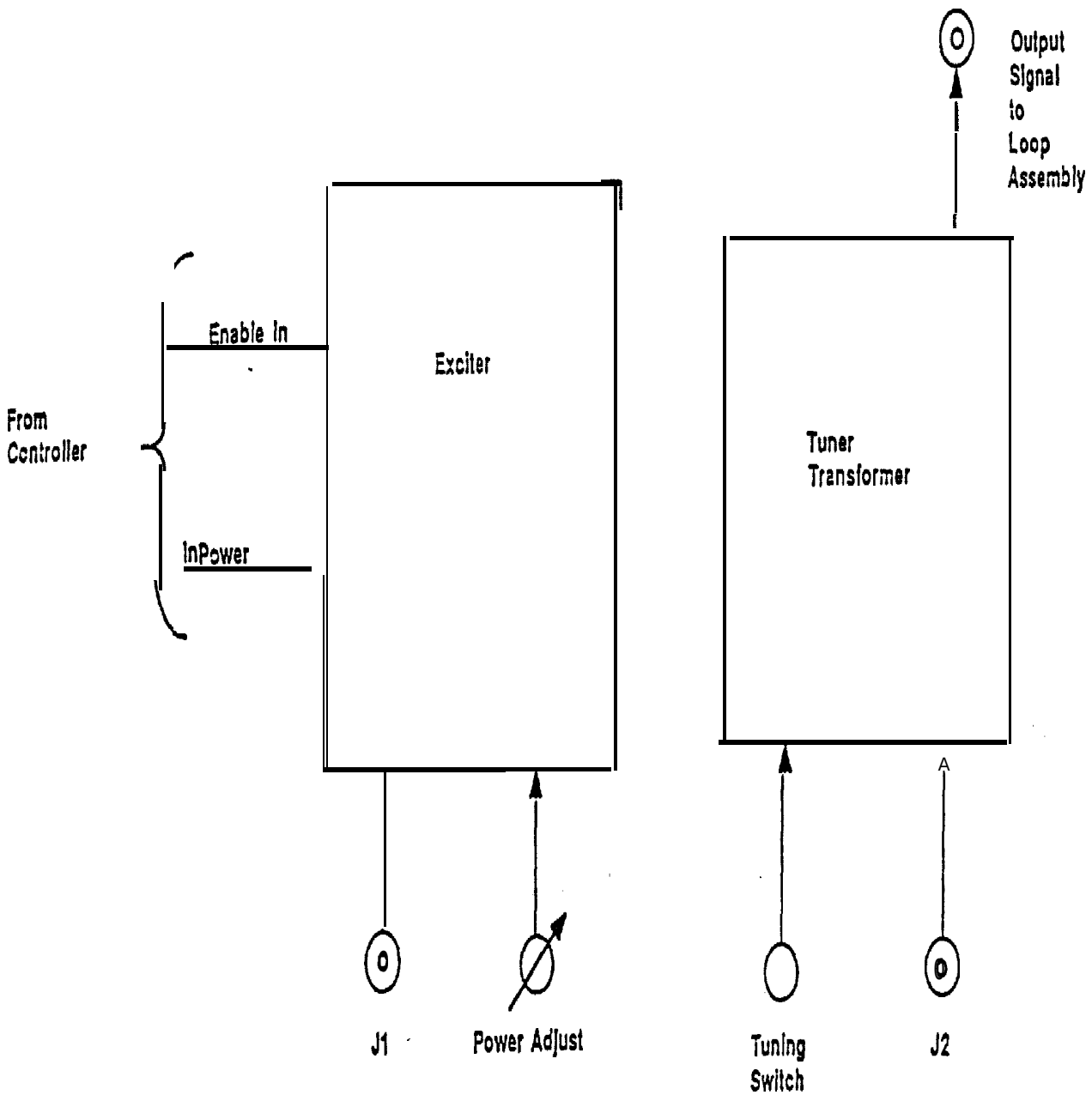

Figure 9

Power Amplifier Functional Diagram

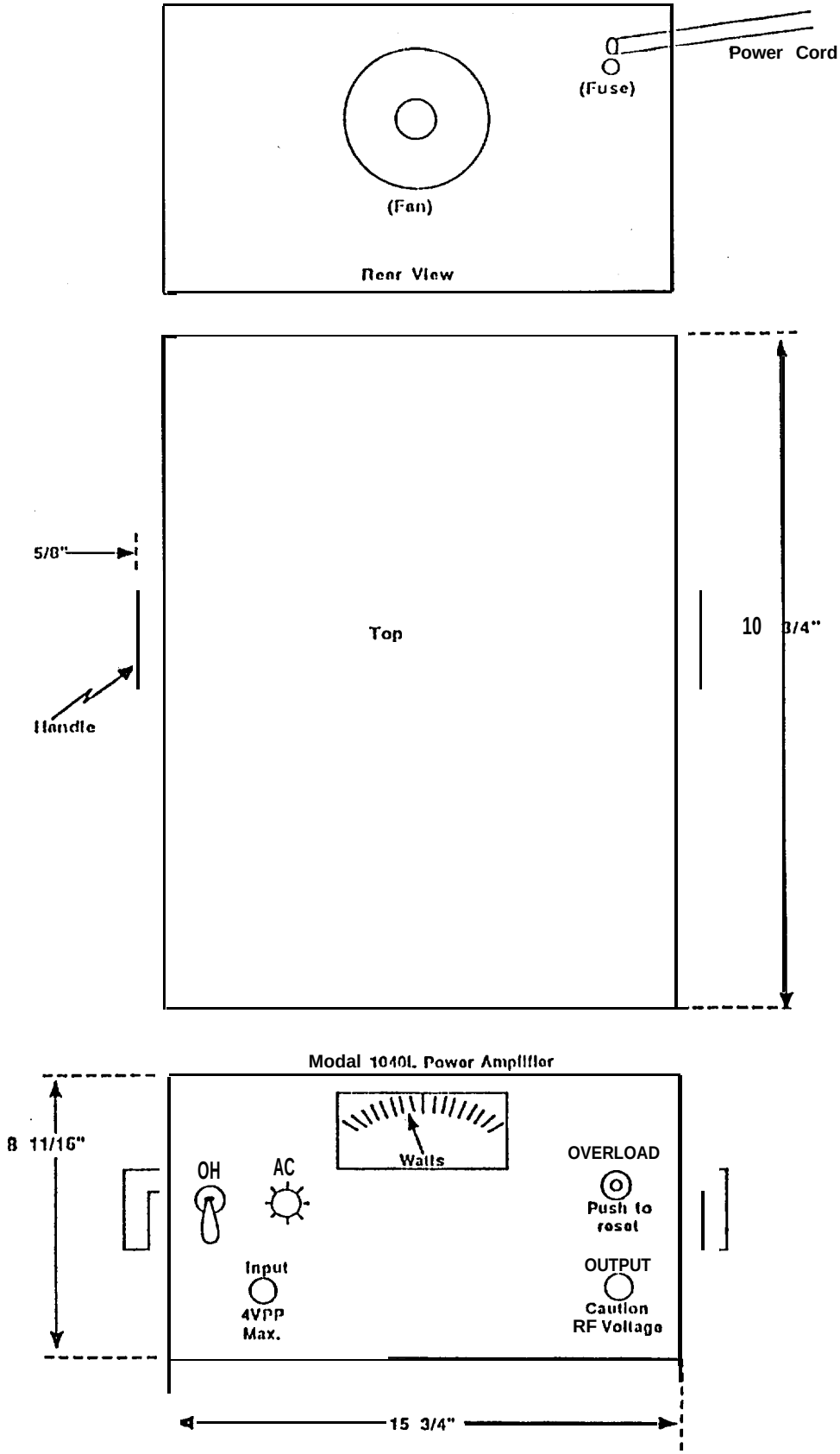

Figure 10
Power Amplifier Unit
800-0122-00

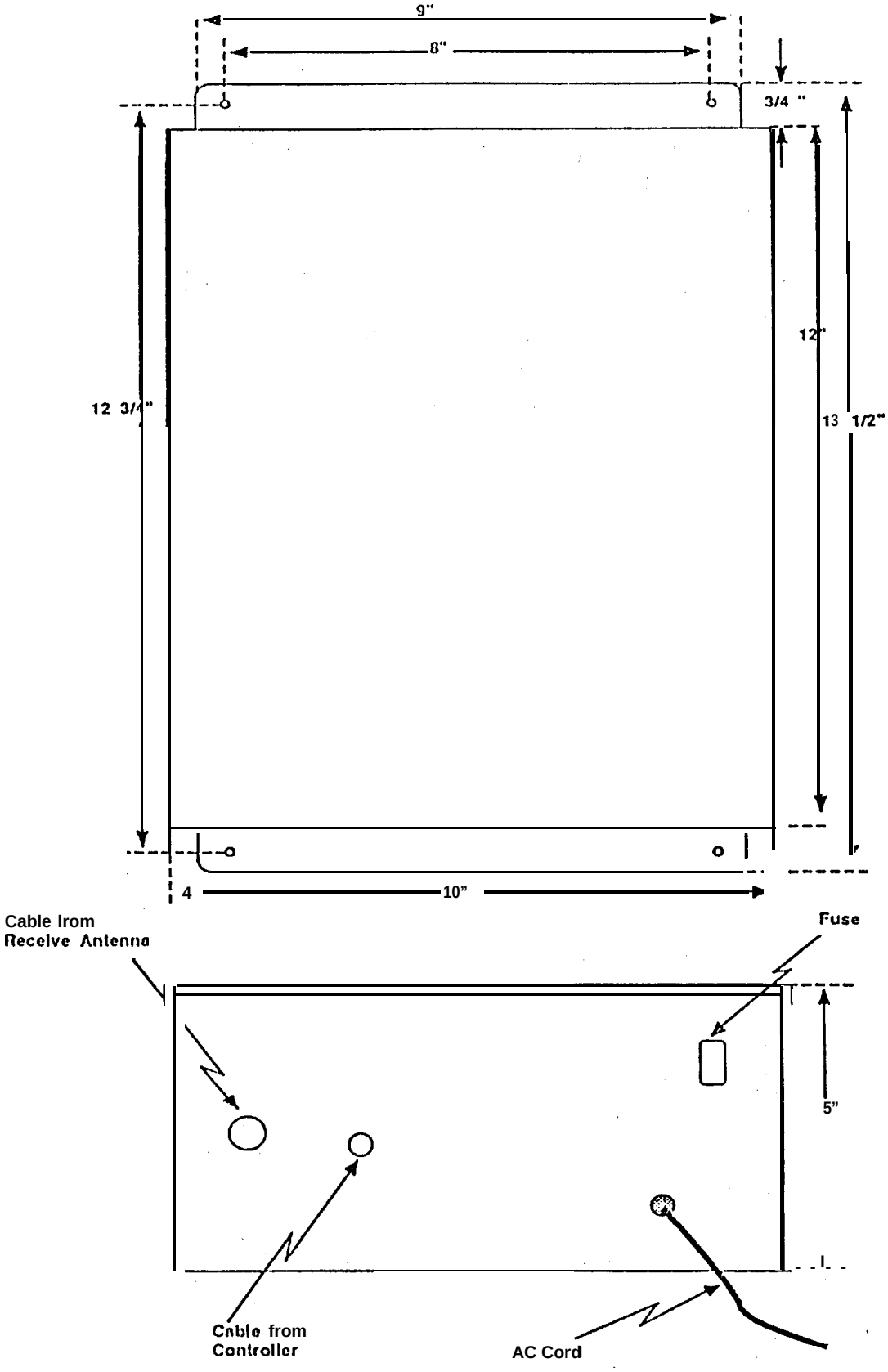

Figure 11
Receive Amplifier
800-0128-00

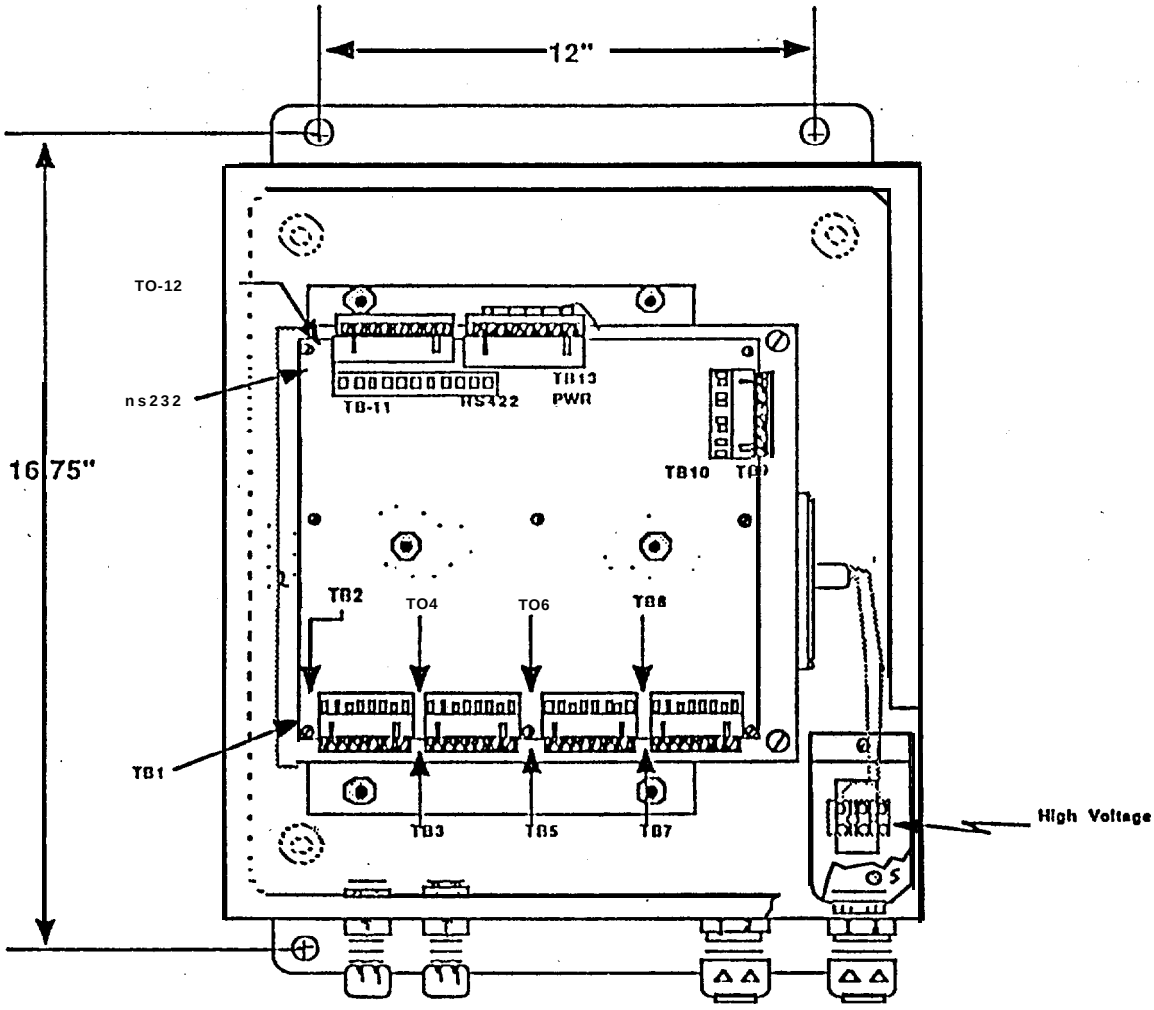

Figure 12
Industrial Controller
800-0075-04

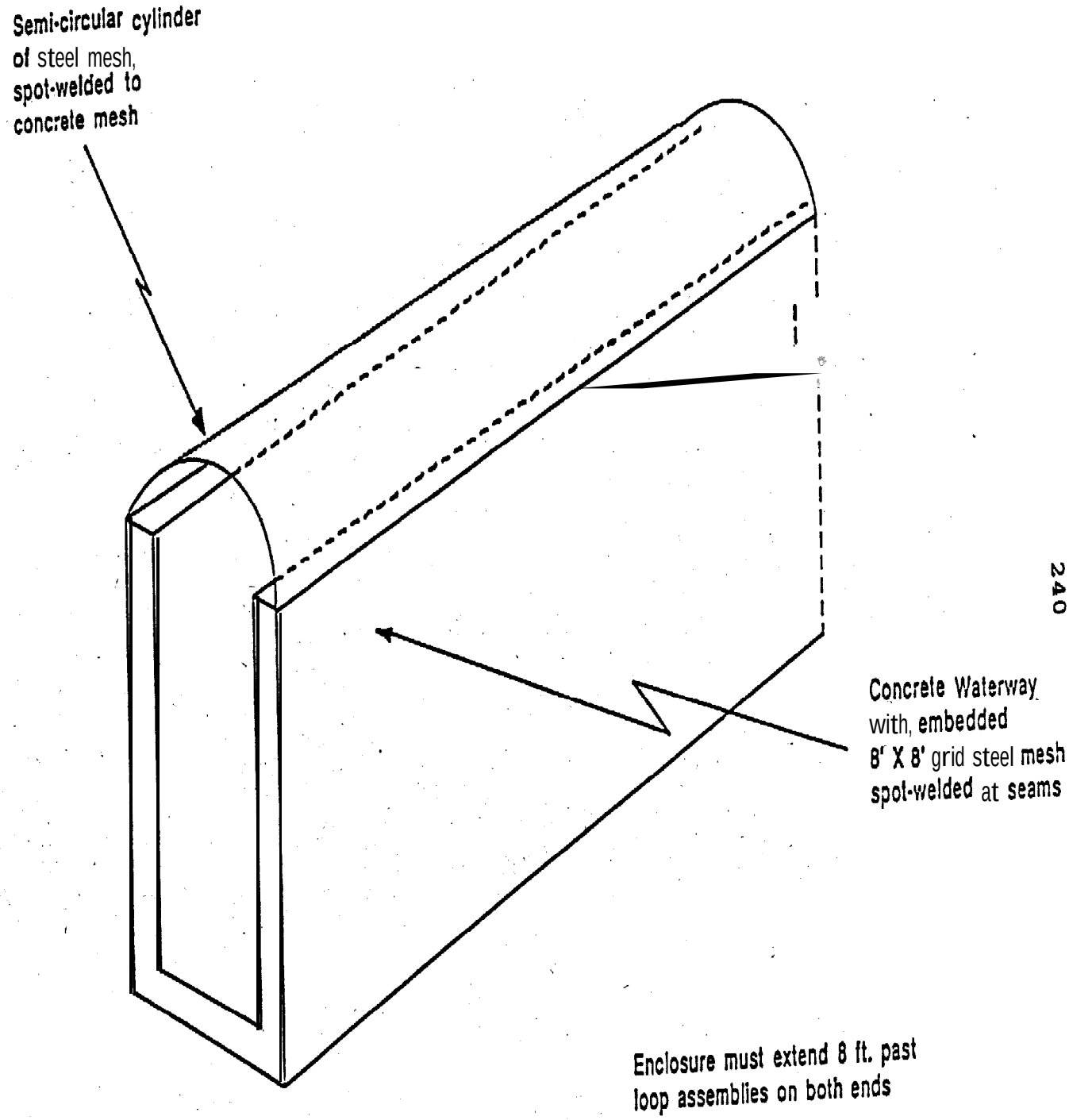

Figure 13
Loop Shielding

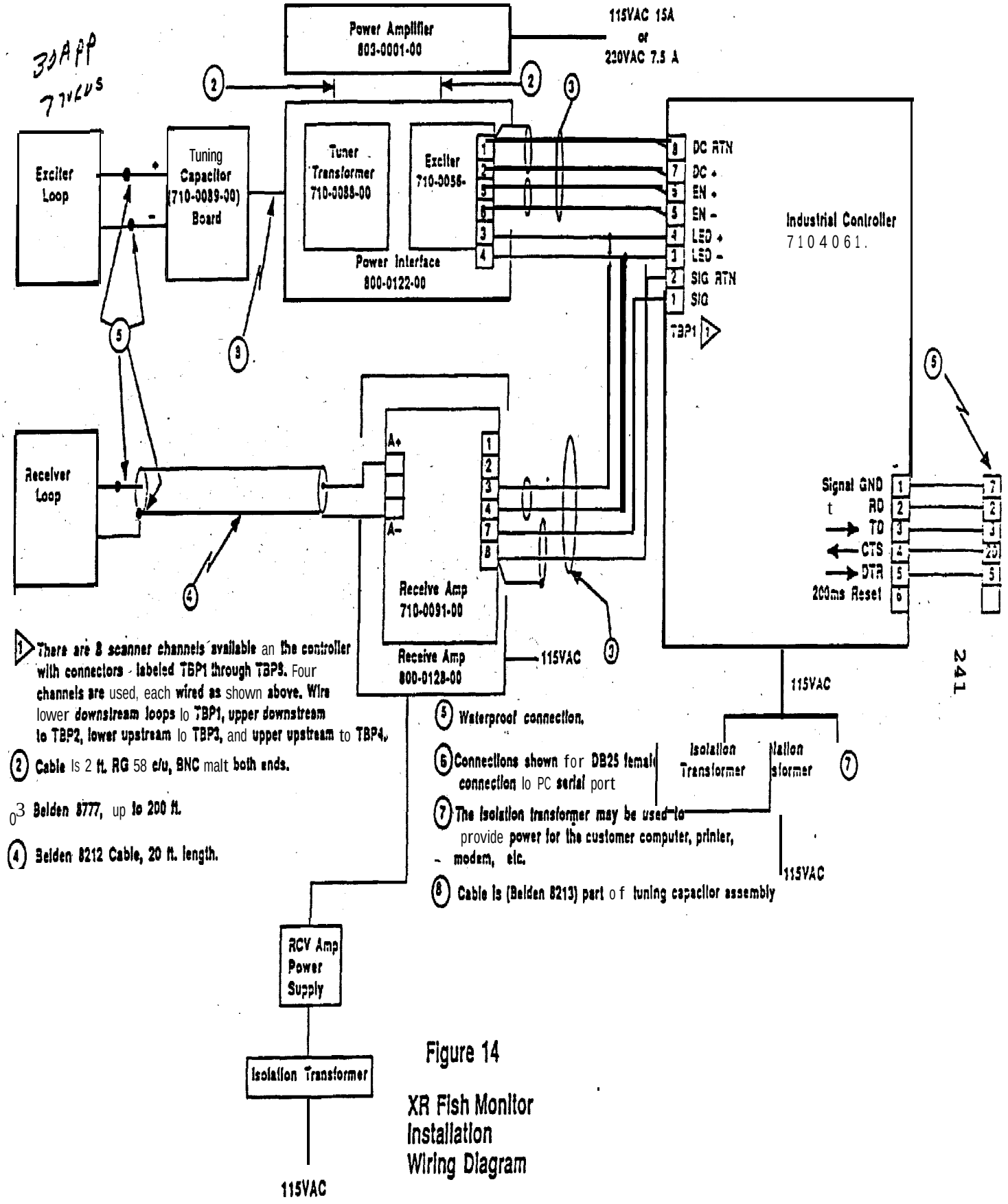

1 There are 8 scanner channels available an the controller with connectors - labeled TBP1 through TBP8. Four channels are used, each wired as shown above. Wire lower downstream loops lo TBP1, upper downstream lo TBP2, lower upstream lo TBP3, and upper upstream to TBP4.

2 Cable Is 2 ft. RG 58 c/u, BNC malt both ends.

3 Belden 8777, up lo 200 ft.

4 Belden 8212 Cable, 20 ft. length.

5 Waterproof connection.

6 Connections shown for DB25 femal connection lo PC serial port

7 The Isolation transformer may be used to provide power for the customer computer, printer, modem, etc.

8 Cable Is (Belden 8213) part of tuning capacitor assembly

Figure 14

XR Fish Monitor Installation Wiring Diagram

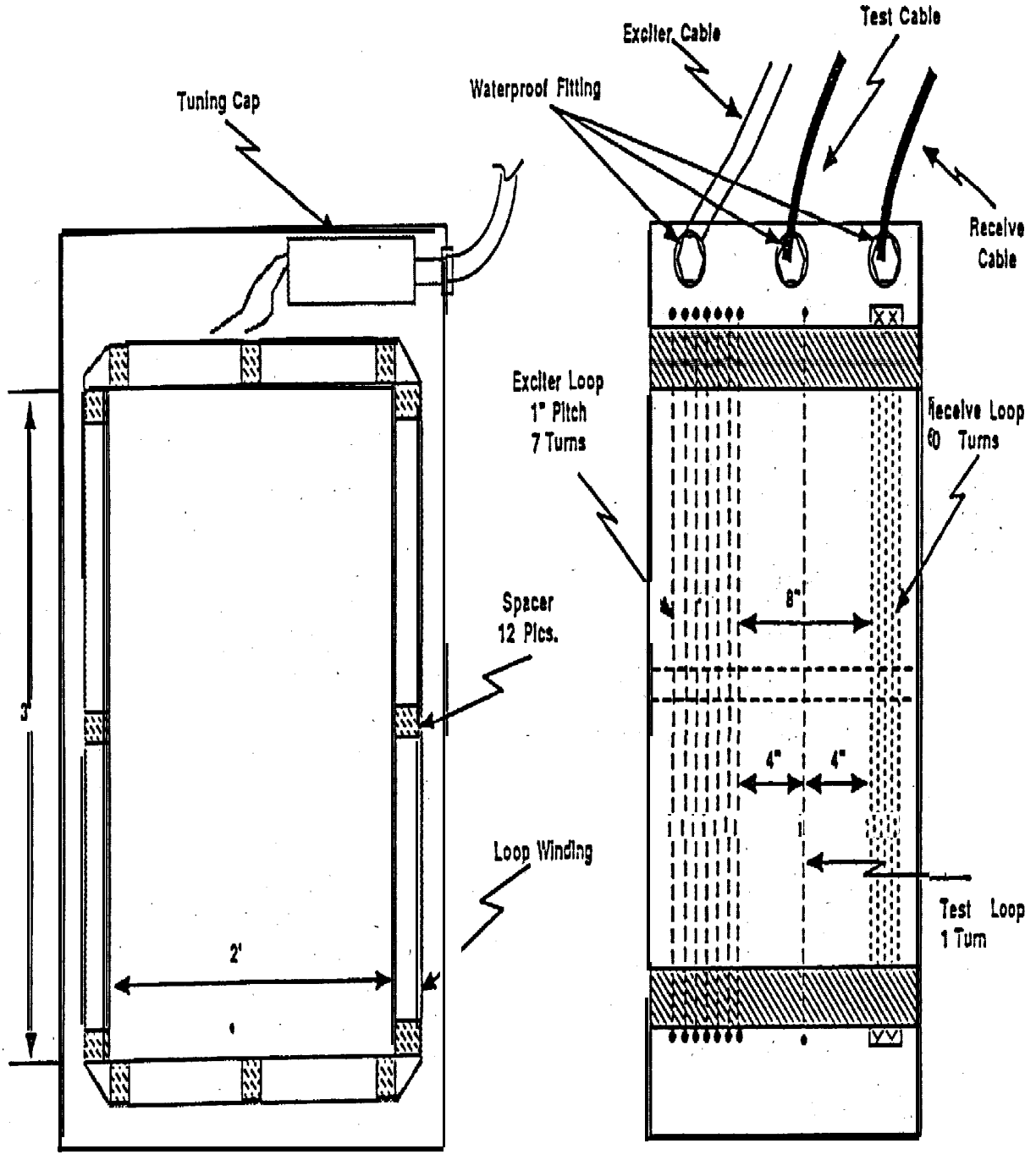

NOTES:

1. Material is fiberglass
2. Spacers to maintain 2 1/2" between wires and water
3. Exciter cable is Belden 8213, 0.405" O.D., supplied with tuning cap
4. Receive cable is Belden 8279, 20 ft.long, 0.22" O.D., can be supplied by Destron if requested

Appendix A
Extended Range Fish Monitor System
Detector **Loop** Assembly

APPENDIX C

Extended-range fish monitor tests, with three loop detectors immersed in water

by

Destron/IDI
2545 Central Avenue
Boulder, Colorado 80301
Literature #2009B

Extended Range Fish Monitor Tests with Three Detector Loops Immersed in Water

Test Description

A swimming pool 4.6 meters in diameter by 1.07 meters deep was erected inside a 7.3 by 7.3 by 3 meter screen room (as protection against health effects of electromagnetic fields) IO run tests of the efficiency and reading speed of an Extended Range Fish Monitor System with three loop detectors. Figure 1 shows a sketch of the screen room and tank, Figure 2 shows a plan view of the detector loo arranged in the pool, and Figure 3 shows a connection diagram for the system.

Goals of the test were as follows:

1. To determine if tags could be read at angles up to 45" from optimum, with tags moving through the detector loops at various distances off center, as well as through the center of the detector loops.

2. To evaluate the relative efficiency of two different kinds of detector loops.

3. To determine the interference effects between the detector loops when operating in close proximity to each other.

4. To determine the maximum velocity at which tags could be read.

5. To determine tbe effect of simple shields in close proximity to the detector loops.

6. To assess performance with tags in all three detector loops at the same time.

7. To determine the radio frequency emission at 400 kHz. See section titled Radio Frequency Emissions.

Table I (next page) shows the results for those tests where tag reading efficiency was involved (1 – 6, above). Efficiency in this test was' defined as the number of tags successfully read divided by the number of tags passing through the system . multiplied by 100 for percent. Column A shows the loop number, where #3 was a simple receiver loop and #1 was a complex receiver loop. A simple loop is comprised of wire windings all in the same plane. A complex loop is constructed like a simple loop, but uses auxiliary loops installed in a plane perpendicular to the primary detector loop. The auxiliary loop cancels out induced voltage from the exciter loop. Loop #2 was used to generate RF energy to test goal #3 above. Column B gives the angle between the exciter loop axis and the tag axis. Columns C through F show the tag speed, and column G gives the conditions for the test.

Table 1
Percent Efficiency for Various Trials and Conditions

Line	Loop	Angle	0.7 m/sec	1.7 m/sec	2.25 m/sec.	3 m/sec	Condition
1	3	0 degrees	100%		94%		2 tags, belt in center
2	3	30 degrees	98%		94%		same
3	3	45 degrees	30-60%				same
4	3	0 degrees	100%	100%	94%		2 tags, belt 7.6 cm above center
5	3	45 degrees	92%	72%	72%		same
6	3	0 degrees	100%	100%	96%		15.25 cm above center
7	3	45 degrees	98%	76%	76%		same
8	3	0 degrees	100%	96%	100%		24 cm above center
9	3	45 degrees	100%	96%	92%		same
10	3	45 degrees	98%	90%	84%		40 cm off center
11	3	45 degrees	100%	100%	98%		25 cm off center
12	1	0 degrees	100%	100%	100%	100%	2 tags, belt in center
13	1	45 degrees	100%	98%		90%	same
14	1	20 degrees				96%	5 tags on belt, 0.7 m spacing, loop 1
15	1	20 degrees		97%			5 tags on belt, 0.7 m spacing, loop 1; 6th tag in loop 2
16	1	20 degrees		98%			same, but 7th tag in loop 3

Tag Read Angle and Different Detector Loops

Looking at line 3 in Table 1, we see that loop 3 would not read tags satisfactorily with the tag angle at 45° and tags moving through the center of the loop, while line 13 shows loop 1, with the same conditions, read with an efficiency of 98% at 1.75 m/sec. Therefore, loop 1 performed better. Lines 4 through 11 show that the tag reads generally better when the tag is away from the center of the detector loops.

Interference Between Detector Loops

The excitation to the detector loops was time-division multiplexed so that only one loop at a time was energized. Because of this, there was no direct interference between the loops. However, the excitation current of 30 amperes peak-to-peak induced a current of about 10 amperes peak-to-peak in the adjacent loop. This did not limit the ability of the system to read the-tags – there was more power available than necessary. In a situation where the water dielectric loss is greater, this may not be the case. Water may have a dielectric constant up to 80 times that of air. When a tuned loop is immersed in water, the capacitance of the loop may change considerably. This changes the loop tuning, but in addition, the losses in the loop may increase because of the losses in the water.

Tag Velocity

The maximum speed available from the belt drive was 3 meters/sec (the belt drive as furnished by NMFS was modified so that it could be placed outside the screen room to remove the motor-controller electromagnetic noise). Loop 1 read well (lines 12 and 13) at this velocity.

Effect of Shields Around Detector Loops

Presence of grounded conductors, such as shielding in the vicinity of the detector loop, may change the RF losses significantly. A shield made of hardware cloth was placed around the loop. When the shield was spaced 0.35 meters away from the loop all the way around the loop, and with water in the pool, system performance was seriously degraded. When the shield was 0.7 meters away from the loop all the way around, system performance was normal. This could not be done with the loop assembly immersed in water since the pool was not deep enough.

Performance with Tags In More Than One Detector Loop

Line 14 shows efficiency for tags spaced 0.7 meters apart and moving at 3 meters/sec, equivalent to more than four fish per second, Line 15 is a repeat of this test, but with an additional tag stationary in loop 2, and a speed of 1.75 meters/sec. Finally, line 16 is a repeat of the same test, but with a tag stationary in both detector loops 2 and 3.

Radio Frequency Emissions

At 25 meters from the loop, radio emission at 400 kHz was measured at 10 millivolts per meter. Measurements could not be taken at greater distances because of an interfering signal. The 10 millivolt per meter signal at 25 meters was only about a factor of 10 higher than can be used under FCC low-power communications rules, but the loop was inside a hardware cloth shield which was completely enclosed in a screen room, and the screen room was inside a metal warehouse. The concrete floor in the warehouse had 15-cm by 15-cm metal mesh reinforcing. The existence or condition of any electrical connection between the mesh and the metal walls of the building is not known. When the hardware cloth shield was removed from the loop, the signal went up by a factor of 2.2 (another 7 db).

For reference, ANSI C95.1-1982 lists 100 mW/square cm, 2.5 amperes squared per meter squared, and 400,000 volts squared per meter squared as recommended whole body limits for long-term human exposure for frequencies from 0.3 to 3 MHz. The magnetic field limit is thus 1.58 amperes per meter. Destron/IDI recommends that no one be allowed within 2 meters of the loop when the power amplifier is on, unless the loop is shielded.

Field measurements were taken near the loop with a Narda model 8616 field strength meter and model 8654 probe furnished by NMFS. The Narda meter is calibrated in terms of power density. Readings above 200 milliwatts per square centimeter were obtained 1 meter from the end of the loop and 0.5 meters from the side. When the Narda E-field probe was used, readings of 200 milliwatts per square centimeter were obtained within 5 cm of the loop enclosure at the end where the exciter loop is located.

The Narda equipment would overload if placed inside the loop, so measurements were made with a small loop and receiver inside the loops. Measurements were as follows;

A, 0.84 amps/meter in the center of the tunnel at the exit.
B. 2.7 amps/meter in the center of the tunnel at the entrance (exciter end).
C. 6.66 amps/meter in the comer as close as possible to the exciter loop.
D. 5.1 amps/meter midway between comers as close as possible to exciter loop.

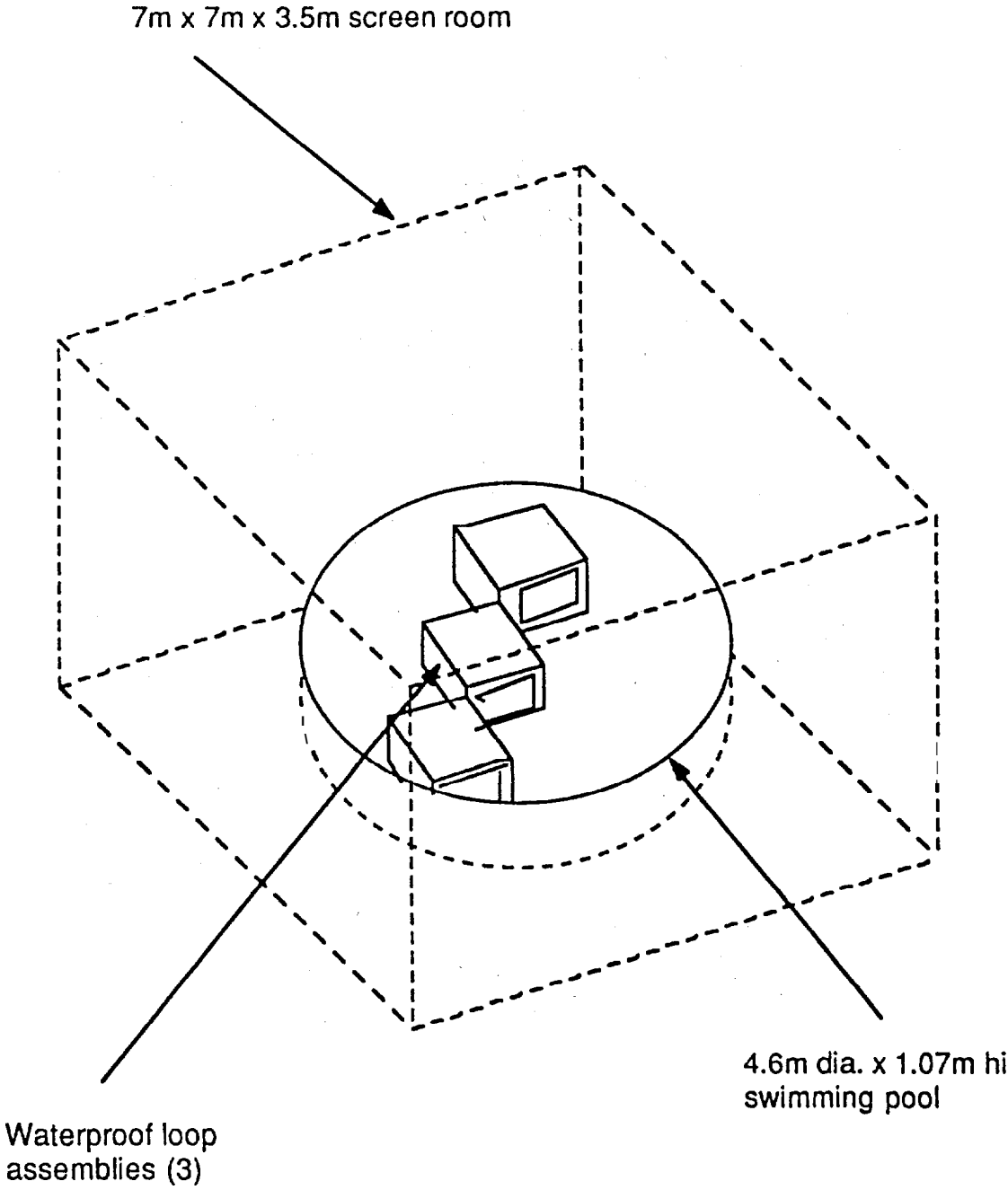

Figure 1: Screen Room and Swimming Pool

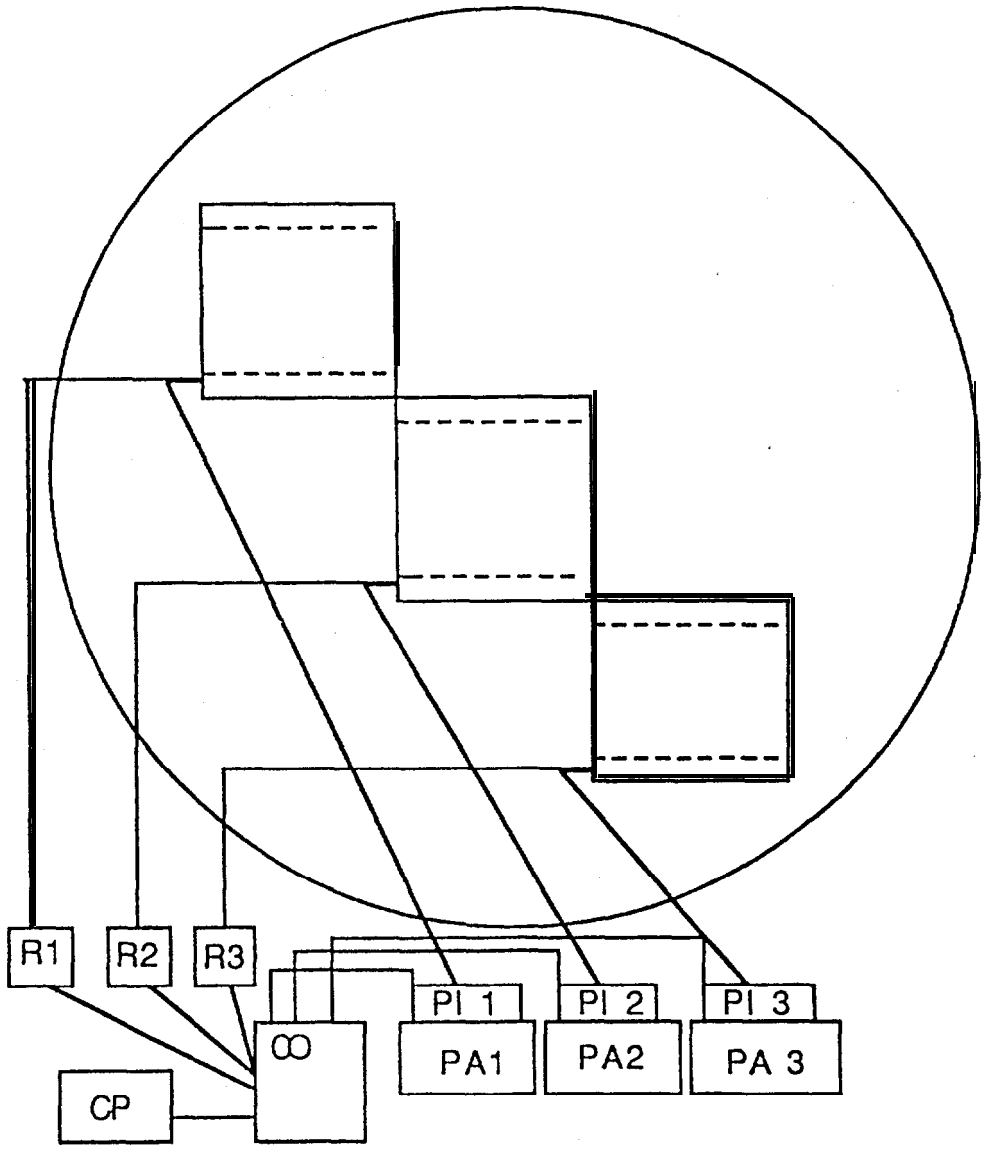

R RECEIVE PREAMP
PI POWER INTERFACE
PA POWER AMPLIFIER
CO CONTROLLER
CP COMPUTER, PRINTER, OR TERMINAL

Figure 2: Extended Range Fish Monitor System Layout

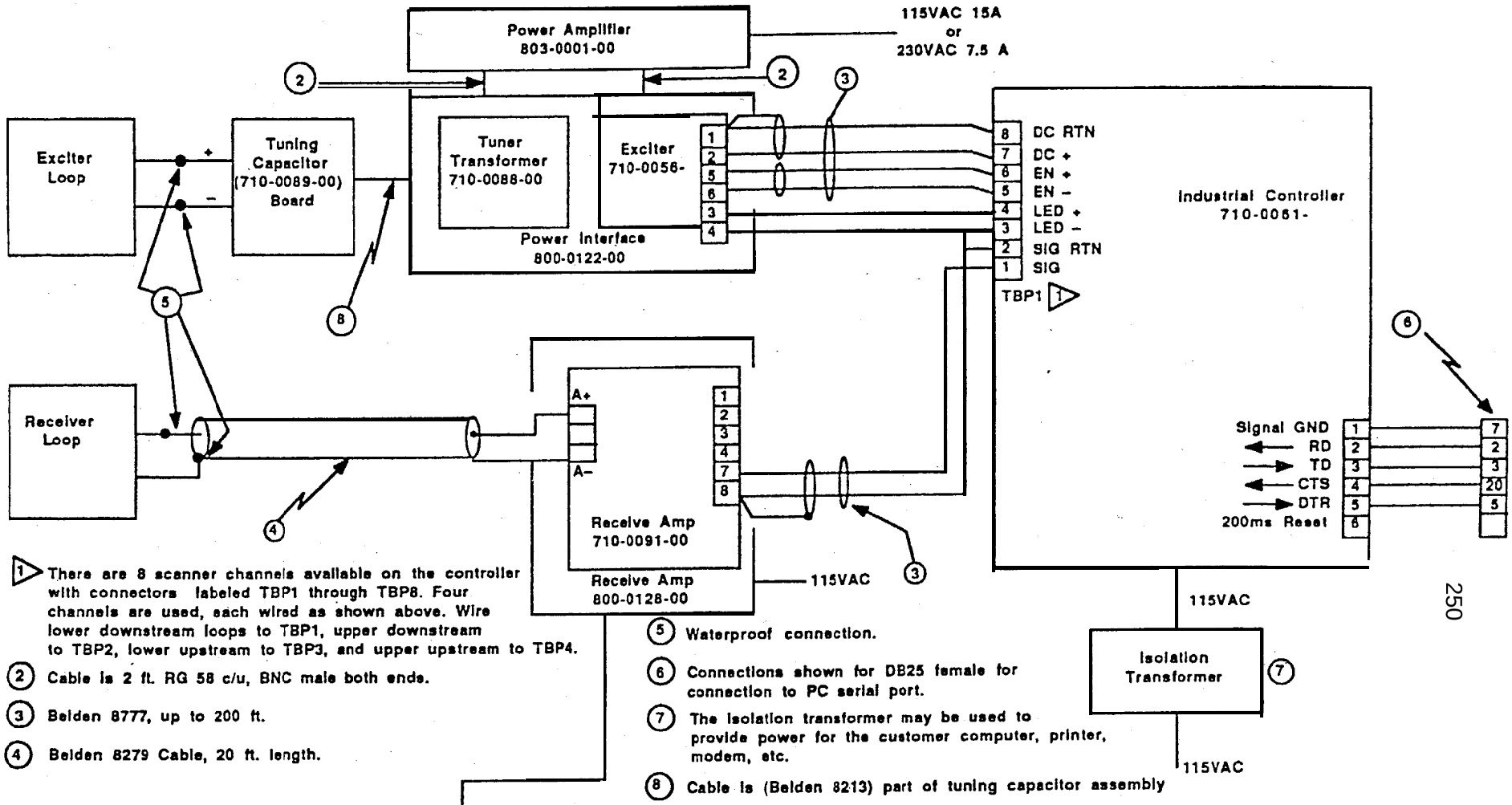

There are 8 scanner channels available on the controller with connectors labeled TBP1 through TBP8. Four channels are used, each wired as shown above. Wire lower downstream loops to TBP1, upper downstream to TBP2, lower upstream to TBP3, and upper upstream to TBP4.

2. Cable is 2 ft. RG 58 c/u, BNC male both ends.
3. Belden 8777, up to 200 ft.
4. Belden 8279 Cable, 20 ft. length.
5. Waterproof connection.
6. Connections shown for DB25 female for connection to PC serial port.
7. The isolation transformer may be used to provide power for the customer computer, printer, modem, etc.
8. Cable is (Belden 8213) part of tuning capacitor assembly

Figure 3: XR Fish Monitor Installation Wiring