A STUDY TO DETERMINE THE BIOLOGICAL FEASIBILITY OF A NEW FISH TAGGING SYSTEM, PART III:

Development and Evaluation of PIT-tag Technology

PROGRESS REPORT 1994-1996

Earl F. Prentice, Sandra L. Downing, Edmund P. Nunnallee, Bradley W. Peterson, Bruce F. Jonasson, Glen A. Snell, and Deborah A. Frost

Fish Ecology Division
Northwest Fisheries Science Center
National Marine Fisheries Service
National Oceanic and Atmospheric Administration
2725 Montlake Blvd. East
Seattle WA 98112-2097

to

U.S. Department of Energy
Bonneville Power Administration
Division of Fish and Wildlife
P.O. Box 3621
Portland, Oregon 97208-3621
Project 83-319, Contract DE-AI79-84BP11982

November 1998

EXECUTIVE SUMMARY

A multiyear program to evaluate the technical and biological feasibility of a new identification system for salmonids was established between the Bonneville Power Administration (BPA) and the National Marine Fisheries Service (NMFS) in 1983. This identification system is based upon a miniaturized Passive-Integrated-Transponder (PIT) tag. This report contains the results from 14 studies completed during 1994-1996 according to program requirements. These studies were divided into two groups, with nine described within the section titled "Development and Evaluation of PIT-tag Systems" and five described within the section titled "Activities at Columbia River Basin Dams."

Four major hydroelectric dams within the Columbia River Basin (CRB) have juvenile fish bypass/collection facilities that contain both PIT-tag interrogation and fish separation (diversion) systems. Interrogation systems energize PIT tags and process their identification codes into a usable form. Separation systems use fish diversion gates to separate PIT-tagged juvenile salmon from non-PIT-tagged fish and to separate targeted PIT-tagged fish from untargeted tagged and untagged fish. At the center of both interrogation and separation systems are dual-coil PIT-tag interrogation units. These units are described in this report.

Development and Evaluation of PIT-tag Systems

The following nine research and development activities are summarized in this section: Underwater PIT-tag Interrogation Systems, Separation-by-Code System: Computer Program (BYCODE), Separation-by-Code System: Diversion Gates, Separation-by-Code System: An Evaluation Tool, Evaluation of Three Generations of 400-kHz Transponders, Evaluation of Generation-3B PIT Tags, Toxicity Evaluation of the Dye used to Detect Broken Tag Casings, Electromagnetic Field Effects on Reproducing Fish: Medaka (*Oryzias latipes*), and PIT-tag Retention in Adult Salmon. Essential elements and key results of each study are summarized individually below. Details on specific topics are presented in the corresponding reports for each study.

Underwater PIT-tag Interrogation Systems

To minimize the stress of sampling fish with nets and trawls, NMFS and University of Washington staff designed and fabricated a prototype 400-kHz PIT-tag interrogation system that was attached to an open cod-end of a trawl net. This approach permitted fish to pass through the capture system unharmed and still allowed researchers to collect data on the migrating salmon. The system developed was towed by two boats to maintain net position and was evaluated on the Columbia River between 15 May and 27 June 1995 (total tow time was 72.6 hours). Information was obtained on 185 PIT-tagged fish.

A number of technical problems arose during the evaluation, but these should be correctable by modifying the net design and using a better sealant to prevent leaks in the interrogation housings. Another problem was that fish tended to congregate in front of the PIT-tag housings and were reluctant to swim through them. In post-evaluation tests, NMFS staff found that a 46-cm-diameter by 30-cm-long tunnel constructed of translucent material improved fish passage.

Despite the problems, the concept of using an open-ended net with an attached PIT-tag interrogation unit was shown to be feasible for the collection of data. When this system becomes operational with the recommended refinements, the information collected will significantly increase our knowledge of fish migrational patterns and behavior in the forebays of dams, in rivers, and estuaries. In addition, the electronic package, with minor modifications, could be attached to the cod-end of a fyke net or to a fish trap.

Separation-by-Code System: Computer Program (BYCODE)

Separation-by-Code systems combine a computer program with one or more fish diversion gates. In 1994, NMFS issued a contract to Pacific Northwest National Laboratory (PNNL) to restructure the computer program so that tag databases could be larger, it would be easier to add new functions in the future, and the program could be more user friendly.

During 1994-1995, the following features were added to the computer program: 1) the maximum number of tag codes that could be stored in the tag database file was increased from 100,000 tags to over a million; 2) the ability to control two-way and three-way rotational diversion gates; 3) the ability to simultaneously control multiple fish diversion gates; 4) the ability to attach individual gate settings (i.e., delay and open times) to each coil above the different fish diversion gates; and 5) the ability to manually trigger the fish diversion gates from the keyboard.

Evaluating the Separation-by-Code system at Lower Granite Dam in 1995 was useful in revealing how the computer program needed to be modified to add the necessary flexibility to make it possible for multiple researchers to use the system simultaneously. These changes will be completed in 1996.

Separation-by-Code System: Diversion Gates

In 1994, NMFS started to address the need to route fish in multiple directions and to construct fish diversion gates for pipes. NMFS developed two-way and three-way rotational gates and side-to-side gates. General descriptions of the two types of diversion gates and how they operate are presented in the report. Evaluations showed that the side-to-side design has several advantages over the rotational design: it can be operated with the pipe at any degree of fullness, it causes less elevation loss, its fabrication is less costly because it requires fewer custom parts, and it is more easily maintained.

Separation-by-Code System: An Evaluation Tool

Once the basic Separation-by-Code System was working, NMFS recognized that the computer program and test facility located at NMFS Manchester Research Station could be used to evaluate modifications being considered for installation at PIT-tag facilities in the CRB. To determine what modifications would be acceptable, the following comparisons were evaluated during 1994: 1) performance of single-read firmware versus double-read firmware at a water velocity of 4 m/second; 2) reading and separation efficiencies based on two versus four coils; 3) separation efficiencies at water velocities of 3 versus 4 m/second; and 4) separation efficiencies for two distances between last coil and diversion gate.

Tests were conducted with PIT-tagged sticks and coho salmon diverted by a slide gate. Reading efficiency (*RE*) was calculated by determining the percentage of tagged sticks or tagged fish read by at least one coil out of all possible PIT tags used in that trial. Separation efficiency (*SE*) for each trial was calculated using the theoretical and actual distributions of tagged sticks or fish within the two terminal holding areas based on which tags had been read. Thus, *SE* represented the percentage of correct actions for each trial.

Results for stick and fish trials using the four-coil arrangement at 4 m/second demonstrated that the *RE* and *SE* performance for double-read firmware was equivalent to that of single-read firmware. In the stick trials for both firmwares, all sticks were read and only one stick was not diverted successfully. Although more fish than sticks were missed, there were still no significant differences in *RE*s or *SE*s between single-read and double-read firmware. Furthermore, the double-read firmware did not produce a single erroneous tag code.

Thus, to avoid potentially harmful erroneous tag codes, NMFS supports incorporating double-read firmware into the interrogation systems at the CRB dams. However, after NMFS finished its tests, Destron-Fearing produced a new generation of 400-kHz tags that incorporated the more accurate cyclic-redundancy-check (CRC) method for error checking. They also wrote new firmware for these tags. Pacific States Marine Fisheries Commission (PSMFC) will install these CRC firmware chips into CRB PIT-tag interrogation equipment for the 1996 juvenile outmigration.

Increasing the number of interrogation coils from two to four coils significantly improved the ability to detect fish. At 3 m/second, average *RE* for the four-coil arrangement (98.3%) was significantly higher than average *RE* for the two-coil arrangement (93.6%). At 4 m/second, average *RE* for the four-coil arrangement (98.3%) was also significantly higher than average *RE* for the two-coil arrangement (93.8%). However, average *SE*s for fish were not significantly improved by utilizing all four coils at either 3 m/second or 4 m/second. The *SE*s for both the two- and four-coil arrangements ranged between 86.1 and 90.2%.

Although not statistically significant, average *SE*s were approximately 2% higher at 4 m/second than at 3 m/second whether the comparison was made for two or four coils. The higher water velocity created more turbulence within the rectangular flume, which appeared to cause fish to swim more actively to correct for the turbulence. NMFS recommends exchanging the rectangular flume for a pipe or round-bottom flume to reduce the turbulent water conditions to help improve separation at 4 m/second.

The shorter distance between the lower interrogation unit and slide gate yielded slightly higher *SE*s than the longer distance between the upper interrogation unit and the gate, but the increase in *SE*s was not significant at 3 m/second or at 4 m/second. However, if only those tags that were targeted to be diverted are considered, one can calculate a diversion efficiency by combining the *RE*s and *SEs* (*DE* = percentage of the tags read that were programmed to be diverted and were successfully diverted). Calculated *DE*s showed that programmed fish that were read were separated significantly better over the shorter distance at both 3 m/second and 4 m/second. At both velocities, *DE*s were < 90% for the upper interrogation unit and close to 97% for the lower interrogation unit. Therefore, NMFS recommends that diversion gates be installed around 1 m (maximally 2 m) from the last coil in future PIT-tag separation system installations. This would permit a higher percentage of PIT-tagged fish to be successfully diverted.

Evaluation of Three Generations of 400-kHz Transponders

The original 400-kHz PIT tags contained Atmill computer chips. When Atmill computer chips became unavailable, Destron-Fearing converted to Eurocell chips for their production tags. These did not perform well during the 1995 season, so Destron-Fearing tried Hughes Microelectronics computer chips. To avoid the in-season problems experienced in 1995, BPA asked NMFS to evaluate the new tags before PSMFC bought them. We designated tags containing Atmill computer chips as Generation-1 PIT tags, those with Eurocell chips as Generation-2 PIT tags, and those with Hughes chips as Generation-3 PIT tags. Performance of all three generations of tags was compared using the test facility at the NMFS Manchester Research Station. The effects of tag orientation (using tags at 45E orientation to simulate marginal reading conditions) and different excitation levels were examined.

With tags in the optimal 0° orientation, the resulting number-of-coils-read/tag averages for each generation were not significantly different. In contrast, when tags were tested at the 45° orientation, no Generation-3 tags and only one Generation-2 tag were read by all four coils, while most of the Generation-1 tags were read by all four coils. The resulting number-of-coils-read/tag averages for each generation were significantly different. A Tukey test separated the Generation-1 average from those of the other two generations. Other study results proved that poor performance by Generation-2 and Generation-3 tags was not due to their being turned off by high excitation power levels.

These results suggest that under normal monitoring conditions, Generation-3 tags would not be an improvement over Generation-2 tags and therefore, should not be purchased by PSMFC.

Evaluation of Generation-3B PIT Tags

In another attempt to match the performance of Generation-1 tags, Destron-Fearing changed the signal modulation in its Generation-3 tags. These tags, designated Generation-3B, were evaluated in February 1996. In all tests, Generation-3B tags performed as well as Generation-1 tags, and significantly better than Generation-2 and Generation-3A tags. Therefore, NMFS recommends that PSMFC buy Generation-3B tags. Unfortunately, these tags were not available for the 1996 spring tagging season, but they were for the summer and fall tagging seasons.

Toxicity Evaluation of the Dye used to Detect Broken Tag Casings

PIT tags are subjected to a series of quality-control tests during their manufacture. In one of these tests to identify broken casings, the newly produced tags are placed in a container with a dye and pressurized at 413.7 kPa (60 psi) for 2 hours. During this treatment, the dye penetrates broken tags and makes them easy to identify. At one time in the 1980s, a red dye was used that NMFS subsequently determined was lethal to fish. Therefore, when Destron-Fearing switched to a new tag manufacturing plant that used a different dye, NMFS again evaluated whether the new dye was toxic to fish.

Test fish were divided into four groups: 1) those injected with regular PIT tags that had been soaked in ethanol, 2) those injected with dyed PIT tags, 3) those injected with 0.5 mL of dye, and 4) those fin-clipped that represented controls. During a 72-hour observation period, no mortalities occurred and fish behavior was normal. Based on these results, the dye (mint green dye #1732) does not appear to be lethal to juvenile coho salmon or cause abnormal behavior; therefore, NMFS concluded that it is an acceptable dye.

Electromagnetic Field Effects on Reproducing Fish: Medaka (*Oryzias latipes*)

The fisheries community has requested that interrogation systems for adult salmon be developed. However, during initial research, NMFS biologists observed that some volitionally migrating adults remained within the interrogation units for several hours. The potential for long exposure of migrating adult salmon to strong electromagnetic fields (EMFs) within interrogation units caused concern because the weakest calculated field strength within a PIT-tag interrogation unit is substantially higher than levels permitted under 1982 American National Standards Institute standards.

Therefore in 1991, NMFS initiated studies to examine whether fish were affected by exposures of up to 24 hours to 400-kHz or 125-kHz fields. It was recognized that to accomplish detection of adult salmon, it would be necessary to switch to a tag operating at a lower frequency. In 1991, most manufacturers were producing 125-kHz tags, so this was the frequency tested.

An earlier NMFS study used medaka (*Oryzias latipes*) as a surrogate for salmon. In this earlier study, there were differences in larval mortality between the control (20.1%) and EMF-exposed groups (27.3-33.7%) among the first-generation medaka offspring. In addition, the control group had fewer deformed hatched larvae (3.0%) than the EMF-exposed groups (5.0-11.5%). Although large, these differences were not significant because statistical power was low, with only six replicates completed. However, the results did suggest that EMF exposure may affect the survival and performance of first-generation offspring from EMF-exposed fish.

Therefore, NMFS designed a second experiment that would permit enough replicates (10) to provide the necessary statistical power for determining whether trends like those listed above are significant or merely due to normal biological variation (the control treatment was duplicated to give a better indication of what the normal level of biological variation was for this species). The modified experimental design also expanded on the first study to test not only tag-energizing frequency, but also field strength and field orientation. This report covers this second medaka experiment.

There were no significant differences between control and EMF-exposed treatments in any category (e.g., egg production/female, fertilization rates, larval mortality rates, deformity rates, overall survival). Duplicating the control treatment was critical for this study as the high standard-deviation values associated with averages for the controls showed a large amount of natural biological variation in this species. At this time, the results suggest no negative effects from exposure to the tested tag-energizing frequencies, field strengths, or field orientations. Assuming that these results are directly transferable, the results do not limit the design possibilities for developing adult salmon PIT-tag interrogation systems as long as adults will not be exposed continuously for longer than 24 hours. Exposures longer than 24 hours might not be a problem, but the effects of longer exposures would need to be tested if a design resulted in salmon being consistently exposed for >24 hours. NMFS recommends that the fisheries community continue pursuing its goal of interrogating adult salmon in fish ladders.

PIT-tag Retention in Adult Salmon

The PIT tag is a reliable tool for identification of juvenile and adult salmon. However, an earlier NMFS study showed that up to 40% of female salmon and 20% of male coho salmon tagged as juveniles lost their tags during sexual maturation. Loss of PIT tags during sexual maturation limits the usefulness of these tags in situations where identification of mature adult fish is required (e.g., broodstock programs).

The PIT tag used in the CRB is encapsulated in biologically inert glass, and therefore it is usually found loose in the peritoneal cavity. PIT-tag manufacturers have found that by coating a tag with parylene or by adding a Teflon tip to the tag, they were able to stop PIT tags from migrating within small mammals. Therefore, NMFS investigated whether these tags, as well as acid-etched regular PIT tags, would reduce tag movement and loss within fish. These tags were compared to unmodified or regular PIT tags for tissue response and tag loss. This study was designed to test whether tissue response or encapsulation of the tag would retard tag loss during sexual maturation. A group of fin-clipped, untagged fish were included as controls for comparing growth and mortality rates between tagged and untagged fish.

Unfortunately, most test fish were killed during the first summer by a synergistic combination of stresses (tagging, anesthesia, elevated water temperatures). Consequently, the experimental design was drastically changed so that dead fish collected could be used to examine tissue response. Four time periods were established to examine how tissue response changed over time (from June 1995 to November 1996). Only one subsample of mature fish was conducted before all remaining fish were eaten by river otters.

Growth and survival results were not significantly different among the five treatment groups at any time during the study. Using the dead fish collected through 31 July 1995, it was possible to determine that consistent tissue response occurred earlier in the Teflon-capped (11 days post-tagging) and parylene-coated (15 days post-tagging) than in the acid-etched or regular PIT-tagged (both 22 days post-tagging) groups. Furthermore, both parylene-coated and Teflon-capped groups had half as many fish as regular and etched groups showing no tissue response during this first time period.

In all four of the time periods, the most consistent trend was that the regular PIT-tag group had the highest number of fish with no tissue response and the Teflon-capped group had the highest number with some tissue response. However, we still do not know if this tissue response will translate into better tag retention during sexual maturation.

With the fisheries community requiring the development of interrogation systems for adult salmon, NMFS recommends that this experiment be repeated. However, there are a few fish culture changes that NMFS recommends if this experiment were to be repeated. We recommend that tagging be done in early spring before water temperatures begin to rise. We also recommend that weights be taken on only 10% of the study fish instead of 100% because it is necessary to anesthetize fish longer when weights are being taken than if one is only tagging and taking lengths. We also recommend that smaller tanks be used so that it is easier to find the dead fish and that study fish be double tagged with a batch tag so that one could at least identify the treatment group on fish that have lost their PIT tags.

Activities at Columbia River Basin Dams

The following five research and development studies are summarized in this section: Review of PIT-tag Systems, Installation of PIT-tag Systems, Measurement of Radio-Frequency Emissions, Performance of Fixed-Reference Tags, and Evaluation of the Separation-by-Code System at Lower Granite Dam. Essential elements and key results of each study are summarized individually under the corresponding headings below. Details on specific topics are presented in the reports for each study that follow this summary.

Review of PIT-tag Systems

NMFS worked with U.S. Army Corps of Engineers (COE) and its contractors in reviewing engineering concept drawings for Ice Harbor, John Day, The Dalles, and Bonneville Dams. NMFS input is critical in determining the number, placement, and installation of PIT-tag equipment. In August 1994, NMFS personnel joined a team of biologists from several fisheries agencies and the COE in reviewing future PIT-tag interrogation and fish separation needs for Lower Granite, Little Goose, Lower Monumental, and McNary Dams. The team's recommendations were presented to BPA in late 1994 and are summarized in the report.

Installation of PIT-tag Systems

During 1994, new bypass/collection facilities for juvenile salmon were completed at McNary and Lower Monumental Dams. In 1995, an experimental site at Lower Granite Dam (GRX) was established as a platform for evaluating the rotational gates and the computer program (BYCODE) that controls fish separation. The GRX site operated independently of the main Lower Granite Dam site (GRJ). A similar experimental site (GOX) was established at Little Goose Dam in 1996.

Measurements of Radio-Frequency Emissions

Radio frequency (RF) emissions from PIT-tag equipment must comply with Federal Communications Commission and National Telecommunications and Information Administration regulations for low-power electronics equipment. Tests were conducted to verify that the interrogation units met these requirements at Little Goose, McNary, and Lower Monumental Dams in 1994.

At Little Goose Dam, new aluminum shields had been fabricated for units that had exceeded the limit for RF emissions in 1993. When these units were retested in 1994, they all complied with the regulations once some exciter boards were corrected. At McNary Dam, despite the facility being new, all but one PIT-tag interrogation unit exceeded the limit for RF emissions. We found that the shields at McNary Dam lacked

welded seams as required by NMFS design specifications. The problem was corrected by retrofitting the shields to meet NMFS specifications. At Lower Monumental Dam, where the shields had been fabricated using NMFS specifications, all measurements of RF emissions were below the limit. Therefore, NMFS recommends that all future installations of PIT-tag systems include shields that meet NMFS design specifications.

Performance of Fixed-Reference Tags

Fixed-reference tags test the operational status of each excitation/detection coil by simulating the passage of two PIT tags through that particular coil. During 1994, fixed reference tags were installed at five CRB dams. In 1995, NMFS requested that Destron-Fearing modify the tag codes of the fixed-reference tags so that all started with a common four-letter code. The change enabled fixed-reference tag codes to be easily identified from normal PIT-tag codes in the computer file. This change helped to improve on-site system analysis. The fixed-reference tag has become a critical maintenance tool for PSMFC.

Evaluation of the Separation-by-Code System at Lower Granite Dam

To start transfer of this technology from the research and development stage at NMFS to the operations and maintenance environment at PSMFC, it was necessary to evaluate the system at a dam. The Separation-by-Code system was evaluated for its ability to direct PIT-tagged fish into five distinct pathways, and the rotational gates were evaluated for mechanical performance. To determine how fish behavior and fish density affected gate efficiencies, tests were conducted in April (low fish density) and May (high fish density) using two salmonid species.

In the April test, separation efficiencies for chinook salmon ranged from 93-97% while most separation efficiencies for steelhead were below 80%. The computer program was modified before the second test to permit setting different delay and open times for each species at each gate. Opening the gate longer for steelhead increased separation efficiency for the river-assigned fish from 73.3% to 89.7%. Unfortunately, because the water velocity was only around 1-1.5 m/second at the three-way gate, compared to almost 3 m/second at the two-way gate, there was not a similar increase for the left- and right-assigned fish (i.e., efficiencies remained below 80%). Therefore, NMFS recommends water velocities of 3 to 4 m/second for Separation-by-Code systems.

In general, the prototype rotational gates performed satisfactorily. However, it was observed during May that the rotational speed of the gates had slowed down relative to the April tests. The gates had probably slowed down from debris collecting in their mechanisms.

CONTENTS

EXECUTIVE SUMMARY iii

INTRODUCTION 1

DEVELOPMENT AND EVALUATION OF PIT-TAG SYSTEMS 5
- Underwater PIT-tag Interrogation Systems 5
- Separation-by-Code System: Computer Program (BYCODE) 8
- Separation-by-Code System: Diversion Gates 11
- Separation-by-Code System: An Evaluation Tool 17
- Evaluation of Three Generations of 400-kHz Transponders 29
- Evaluation of Generation-3B PIT Tags 34
- Toxicity Evaluation of the Dye used to Detect Broken PIT-tag Casings 37
- Electromagnetic Field Effects on Reproducing Fish: Medaka (*Oryzias latipes*) 40
- PIT-Tag Retention in Adult Salmon 52

ACTIVITIES AT COLUMBIA RIVER BASIN DAMS 67
- Review of PIT-tag Systems 67
- Installation of PIT-tag Systems 67
- Measurements of Radio-Frequency Emissions 68
- Performance of Fixed-Reference Tags 70
- Evaluation of the Separation-by-Code System at Lower Granite Dam 71

ACKNOWLEDGMENTS 77

REFERENCES 78

INTRODUCTION

In 1983, the National Marine Fisheries Service (NMFS) began a cooperative research program with the Bonneville Power Administration (BPA) to develop and evaluate a miniature 400-kHz, implantable Passive-Integrated-Transponder (PIT) tag for use with salmonids. Over the years, this program has encompassed many activities: evaluating different PIT tags, developing tagging techniques, investigating host responses to being tagged, developing PIT-tag interrogation and separation systems for dams, and coordinating the development of a PIT-tag information system (PTAGIS) for the Columbia River Basin (CRB).

In the CRB today, most PIT tags are implanted in juvenile fish. PIT-tag interrogation systems, which are located within juvenile fish bypass/collection facilities at federal hydroelectric projects, passively and non-intrusively collect information about individual fish as they migrate down river (Fig. 1). From 1987 through 1996, over 1.5 million juvenile salmon were marked with PIT tags. Both tagged and untagged salmon are subjected to the 400-kHz electromagnetic field (EMF) that energizes PIT tags as they traverse interrogation units.

Each energized PIT tag transmits a return signal at 40-50 kHz that contains the tag identification code. This return signal is received and processed by components of the interrogation system (Fig. 2; Prentice et al. 1990a). Along with the tag code, the time, date, and location of individual fish are recorded permanently in the PTAGIS database.

Four dams within the CRB have juvenile fish bypass/collection facilities that contain both PIT-tag interrogation and fish separation (diversion) systems. The latter systems mechanically separate PIT-tagged fish from non-PIT-tagged fish. The PIT-tagged fish are directed either back to the river or into special holding areas. This separation is accomplished without handling the fish, and the time, date, and location of individual fish are recorded as the fish pass through subsequent interrogation units. If tagged juvenile fish are returned to the river (e.g., below Lower Granite Dam), they can be subsequently re-interrogated at other downstream PIT-tag interrogation systems (Fig. 1).

At the center of both interrogation and separation systems for juvenile salmonids are dual-coil PIT-tag interrogation units (Fig. 2). All dual-coil PIT-tag interrogation units are assembled with the following standard components: 1) an aluminum shield to control errant radio frequency (RF) emissions and to provide weather protection for electronic components, 2) two excitation/detection coils (also called antennas) wrapped around a non-metallic fish passageway, 3) a tuner for each coil within the shield box, 4) a dual power supply, 5) a dual exciter board, 6) a power filter, and 7) a controller housing the tag-reading firmware and supporting electronics (Prentice et al. 1990a).

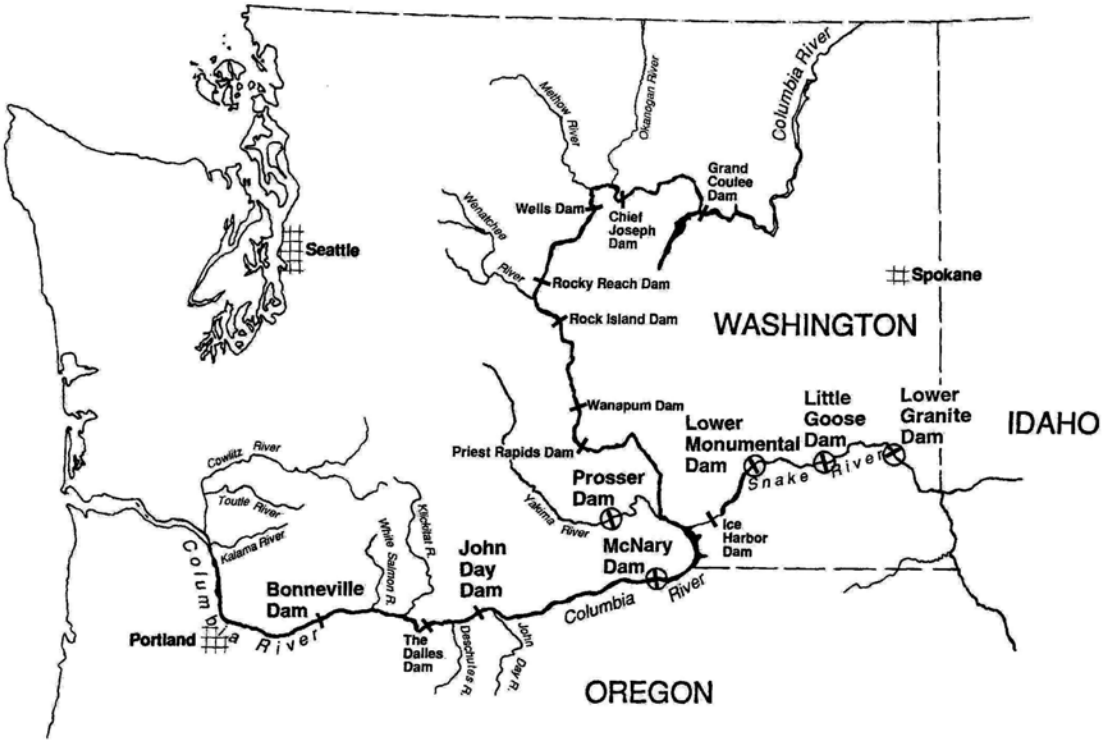

Figure 1. Hydroelectric dams in the Columbia River Basin. Those dams with PIT-tag interrogation systems are circled.

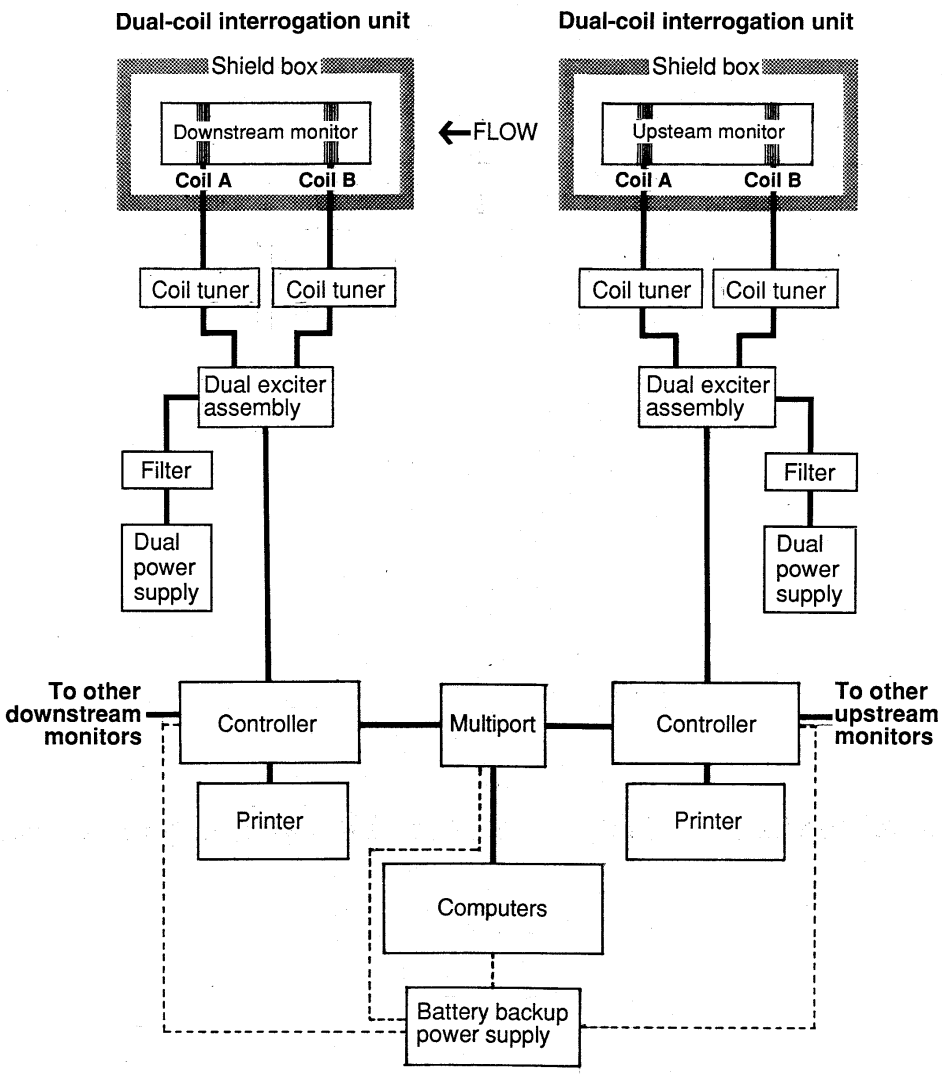

Figure 2. General schematic of a PIT-tag interrogation system like those used at Columbia River Basin dams.

To maximize the collection of data, the interrogation system is designed with redundant components to provide backup in case of component failure. For example, there are typically four coils (two dual-coil interrogation units) above a diversion gate so that if one set of two coils fails, information can still be collected and used to trigger the diversion gate.

This report covers a variety of work elements completed during 1994-1996. Other work elements completed during the same period were previously compiled into two separate reports because of their length and to expedite the transfer of information to the fisheries community. For convenience, this report is divided into two sections: 1) Development and Evaluation of PIT-tag Systems and 2) Activities at Columbia River Basin Dams.

DEVELOPMENT AND EVALUATION OF PIT-TAG SYSTEMS

Underwater PIT-tag Interrogation Systems

Introduction

Various types of trawls, fyke nets, and traps are used to collect data on migrating juvenile and adult salmon in the CRB. Presently, all caught fish are handled to separate out the few fish of interest. During this sorting process, most fish, including unwanted bycatch, are severely stressed, and many are killed. To minimize the stress of the sampling process, NMFS and University of Washington staff designed and fabricated a prototype 400-kHz PIT-tag interrogation system that attached to an open cod-end of a trawl net. This approach would permit fish to pass through the capture system unharmed and still allow researchers to collect data on the migrating salmon.

Methods and Materials

The design and fabrication of the underwater PIT-tag interrogation unit was accomplished by personnel from NMFS Sand Point Electronics Shop. This segment of the study was supported by BPA. Adaptation of a Kodiak trawl net by adding extended wings to the main net was performed by University of Washington and NMFS staff. This group also evaluated the combined system (i.e., net and PIT-tag interrogation unit) on Lake Washington and on the Columbia River. This segment of the study was supported by the Portland District U.S. Army Corps of Engineers (COE).

The design for the underwater PIT-tag interrogation unit incorporated most of the standard electronic components that are used for interrogating juvenile salmon throughout the CRB (see Fig. 2). The computer, printer, power supply, exciters, and controller were maintained above water in an instrument barge that was towed behind the net. The coils and tuning circuitry were installed in waterproof housings that surrounded the fish passageways. Two of these housings (two antennas per housing) were placed side-by-side and then attached to the net in place of its cod-end section. The inside measurement of each fish passageway was 61-cm high by 20-cm wide by 89-cm long. The net and attached interrogation unit were towed by two boats (Fig. 3). Fish behavior in the net and near the PIT-tag interrogation unit was documented using video cameras, hydroacoustics, and divers. To determine if fish passing through the collection system were harmed, a sanctuary net was occasionally appended to the interrogation unit.

The combined system was evaluated on the Columbia River near Jones Beach (approximately 75 km from the mouth of river) between 15 May and 27 June 1995 (total tow time was 72.6 hours).

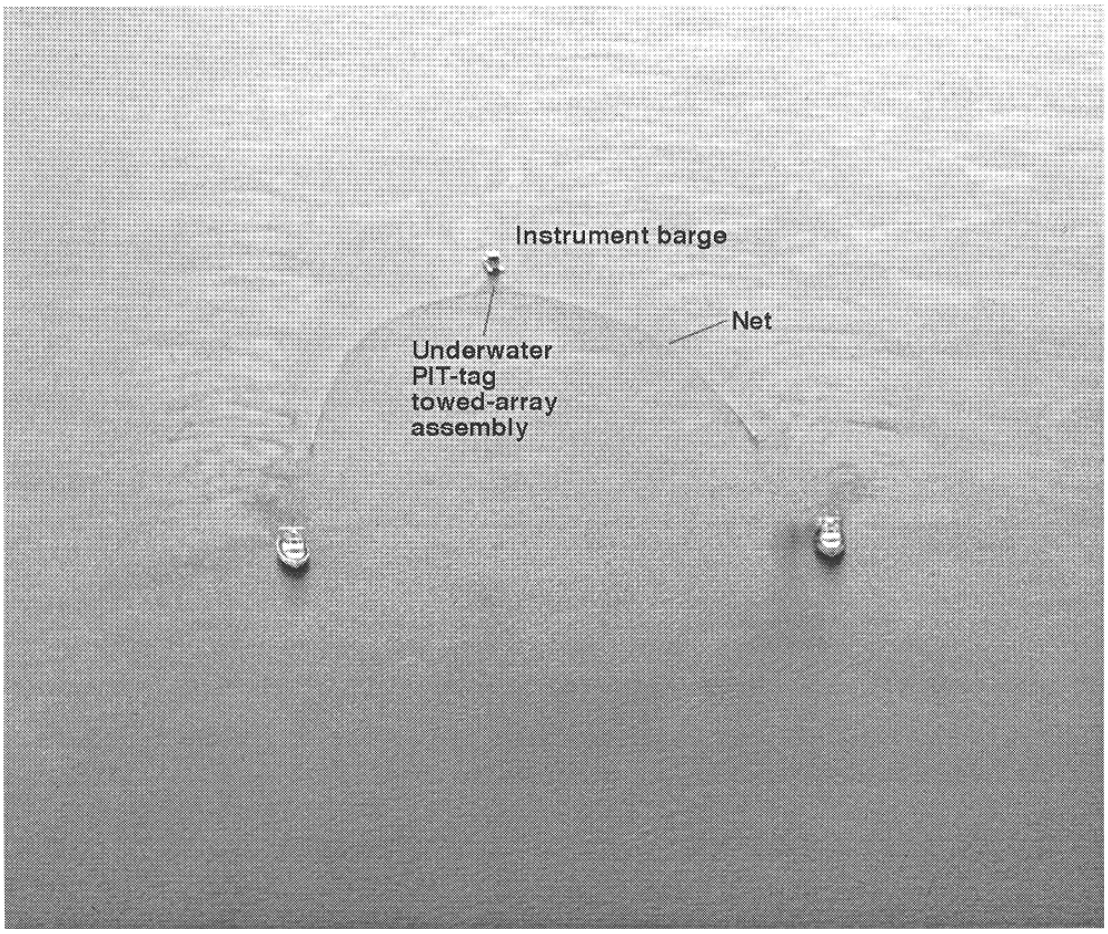

Figure 3. Photo of the underwater PIT-tag interrogation system in operation. Shown are the tow boats, net, and instrument barge. The PIT-tag interrogation unit is submerged and out of sight.

Results and Discussion

Information was obtained on 185 PIT-tagged fish. The information included their tag codes, the time and date of their interrogation, and the location where interrogation took place. In addition, 1,188 fish were captured in the sanctuary net for evaluation. Of the fish captured in the sanctuary net, 125 (10.5%) were descaled and 11 (0.9%) were injured. Over the entire study, 99 fish were killed; most were killed when the net wings were collapsed during retrieval.

A number of technical problems arose during the evaluation: 1) the large net size and the heavy interrogation housings made system deployment difficult; 2) it was difficult to maintain the net in its proper fishing configuration; 3) the interception of large debris at times was a problem; and 4) the interrogation housings leaked water, which caused electronic failures. To correct these technical problems, the net design is being modified and future interrogation housings will use a better sealant.

Another problem was that fish tended to congregate in front of the PIT-tag housings and were reluctant to swim through them. Most likely this behavior was due to both the small size of the tunnels, which was dictated by the short reading range of 400-kHz PIT tags, and the fact that the tunnels were constructed from non-translucent material. During August, NMFS staff tested several open cod-end designs to observe fish response and found that a 46-cm-diameter by 30-cm-long tunnel constructed of translucent material improved fish passage.

Conclusions and Recommendations

The concept of using an open-ended net with an attached PIT-tag interrogation unit was shown to be feasible for the collection of data. Compared to normal net sampling procedures, this approach will greatly reduced the impact on sampled fish. As indicated above, further refinements to the system are required before it can be considered ready for reliable field use. When this system becomes operational, the information collected will significantly increase our knowledge of fish migrational patterns and behavior in the forebays of dams, in rivers, and estuaries. In addition, the electronic package, with minor modifications, could be attached to the cod-end of a fyke net or to a fish trap.

Using additional electronics, future information on fish depth, environmental conditions, and sample locations could be obtained automatically. In addition, when the CRB converts from the present 400-kHz system to an ISO-based system operating at 134.2 kHz, the resulting longer read distance should enable further design changes to be made that will encourage fish to swim through the housings.

Separation-by-Code System: Computer Program (BYCODE)

Introduction

A system that could divert specific PIT-tagged fish from other PIT-tagged or untagged fish would permit greater flexibility in addressing more specific questions in fish transportation, survival, and other studies. With this need in mind, NMFS developed and evaluated a prototype Separation-by-Code system during 1992-1993 (Prentice et al. 1994). Separation-by-Code systems combine a computer program with one or more fish diversion gates. The computer program uses the individual PIT-tag codes to separate desired or targeted PIT-tagged fish from untargeted tagged and untagged fish. When a particular fish is programmed to be diverted, the computer program sends an output signal to a gate controller that then sends the appropriate electrical signal to the fish diversion gate to make it open or rotate.

By the end of 1993, the computer program performed the basic data collection and separation functions, but was limited to Tag Database files of 100,000 codes and was difficult to use. Thus, in 1994, NMFS issued a contract to Pacific Northwest National Laboratory (PNNL) to restructure how the computer program was organized so that the Tag Database files could be larger, it would be easier to add new functions in the future, and the program would be more user friendly. For example, the Tag Database file was restructured so that it included the tag code of each targeted fish and an associated "Action code." An Action code was needed so that the program could quickly control the different diversion gates to get tagged fish to their appropriate destinations.

Action codes are decimal numbers (0-255) used to designate specific subsets of fish (e.g., different tagging sites, different treatments) that have the same set of actions applied to each tag within that subset throughout the entire facility. This way subgroups of fish can be treated differently through a dam (e.g., routed to different destinations). The actions (= output signals) for all Action codes for each coil within the interrogation system are defined in another section of the computer program. Output signals can also be defined for tag codes that are not in the Tag Database file. Internally, the computer program uses the Action code and not the individual PIT-tag codes to get PIT-tagged fish to their final destinations (e.g., whether an individual fish should exit to the river, to a barge, or to a particular sampling station). Below, the major modifications accomplished during 1994 and 1995 are discussed.

1994

Most of 1994 was spent restructuring the computer program and adding a few critical features. The restructured program was given the name BYCODE (the program name is limited by DOS to 8 letters) as a shortened version of Separation-by-Code. Below are descriptions of some of the critical features added in 1994:

Increasing database storage from 100,000 tags to over one million--Being able to store a minimum of one million tag codes in the Tag Database file is necessary for the Separation-by-Code computer program to meet CRB needs. This number will enable tag codes from multiple years to be loaded into the Tag Database file at the same time. This feature will not only enable multiple investigators to conduct Separation-by-Code studies with juvenile fish at one site, but will make it possible to conduct a study with adult fish. The Tag Database file size was increased by incorporating a "bubble" sort approach. This approach meant that in a file with a million tags it would take a maximum of 12 comparisons to find the targeted tag code. The sort routine was evaluated for processing time using an oscilloscope. The bench test showed that the search time for tags, regardless of the number of tags in the database, did not exceed 1.5 milliseconds on a 486 PC computer. This speed should easily satisfy all Separation-by-Code applications in the CRB. No errors in the tag-code search and sorting process were detected in either laboratory or field testing of the program.

Adding control of two- and three-way rotational diversion gates--The test facility at the NMFS Manchester Research Station originally only had one slide gate, but it was expanded to permit testing of rotational diversion gates. The original computer program could only interface with slide gates and so computer code had to be written for the computer program to control the rotational gates.

Adding simultaneous control of multiple fish diversion gates--Since there were now multiple gates present at the test facility, we tested whether a programmable logic controller (PLC) would work as a centralized gate controller. A centralized gate controller would allow the computer to send different output signals to one location (the PLC) to open multiple gates simultaneously. More computer code had to be written to add the ability for BYCODE to interface with the PLC controller, but the PLC approach proved to be satisfactory and so PLCs were installed at dam sites starting in 1995.

Attaching individual gate settings (i.e., delay and open times) to coils--The fact that individual gate settings (i.e., delay and open times) could be assigned to each coil in interrogation units above each fish diversion gate meant that all four coils could be used to open a gate. In the current system installed at the dams, only the two lower coils open a slide gate, and the same gate settings are applied to both coils. By having the computer control the gate settings, different delay times could be set for each coil. If a tag code was successfully read at a second coil, the program deleted the gate-timing information for the first coil and inserted the new gate-timing information. That way the gate would be opened using the gate settings for the most downstream coil that read a fish. This is important because fish do swim in the flumes and if a diversion gate is opened too soon or too late, it could miss the targeted fish.

Adding a manual trigger for the fish diversion gates--In order to distinguish if a problem (e.g., diversion gate does not open) was due to the computer program or to diversion gate failure, the ability to manually trigger the fish diversion gates from the keyboard was added. This also enabled us to easily compare how the rotational diversion gates operated with different amounts of water flowing through them. This helped to improve the rotational gate designs.

Improving the user friendliness of the program--The previous program was difficult to use and so the program was designed to be menu driven to make it more user friendly.

1995

During 1994, the decision was made to test a complete Separation-by-Code system at Lower Granite Dam in 1995. A decision was also made that if everything went smoothly, the computer program would be installed at the main CRB PIT-tag sites in 1997. At the Lower Granite Dam Experimental site (GRX), two-way and a three-way rotational gates were installed as well as all of the electronic hardware and computers necessary for operating a site with 12 coils. Two fish tests were run. After the first, it became obvious that fish separation would be best if different gate settings could be applied to the two species being tested (steelhead and chinook salmon). Therefore, computer code was added for the ability to have multiple Diversion Units describing the same physical coils. These were referred to as logical Diversion Units. This helped improve the separation efficiency for steelhead.

A U.S. Fish and Wildlife Service (USFWS) researcher used the Separation-by-Code system at GRX after we finished our tests. He wanted to collect two different groups of fish, one of which had many more tag codes than the other. For this reason, he wanted to collect one in three fish from the large group and all fish from the smaller group. Initially, this was a problem because the program was written to apply the same ratio (1 in 3) to all gates and to all Action codes (or all of his test fish). A short-term solution for this research project was added, but we realized that the program needed to be changed to add the necessary flexibility to make it possible for multiple researchers to divert different ratios at the same and different diversion gates. The experience of using the program at a dam site also indicated several modifications that had to be completed before the computer program could be installed at the CRB dam sites as scheduled in 1997.

Conclusions and Recommendations

The restructuring of the program was helpful in adding more flexibility to the program and making it useful for fisheries researchers. When the results from the GRX evaluation and the USFWS study were presented at the PIT-tag workshop in January 1996, several researchers requested use of the computer program at two dams during 1996. To accommodate these requests, many of the identified modifications had to be immediately finished instead of waiting for the 1997 season. These modifications will first be tested at Manchester and then in the field using the researchers' studies. This will give us feedback from actual users and help us define how to improve the program so that it can satisfy their requirements. The development of this computer program is on schedule to meet the 1997 date for installation at the main Columbia River Basin sites.

Separation-by-Code System: Diversion Gates

Introduction

As the Separation-by-Code system was developed, it became obvious that it would require PIT-tagged fish to be routed to new locations as they passed through the juvenile fish bypass/collection facilities. For example, fish could be routed to a fish holding tank so that researchers could examine their fish. However, in 1992-1993, only two types of fish diversion gates were available: a swing gate (Fig. 4) and a faster slide gate (Fig. 5). Both of the gates were designed for rectangular fish passage flumes and were limited to two-way fish diversion. Therefore in 1994, NMFS started to address the need to route fish in multiple directions and to construct fish diversion gates for pipes. NMFS developed rotational gates and side-to-side gates. Below is a general description of the two types of diversion gates.

Discussion

Two-way and three-way rotational gates were developed by NMFS between 1994 and 1996 (Fig. 6). Both rotational designs use an aluminum cylinder that has a portion cut away (about one third of the diameter). The cylinder is supported on both ends by a bearing assembly. Attached to one end of the cylinder is a sprocket that is in turn attached to a drive sprocket via a belt. The drive sprocket is controlled by a pneumatic piston that is operated with a motor. Upon receiving a signal from the computer, an electronic air valve opens and actuates the piston. A two-way piston is used for the three-way rotational gate and a one-way piston for the two-way gate. The two-way rotational gate is designed to rotate 180 degrees, while the three-way rotational gate rotates 160 degrees to the right or left of center. The mechanical movement of these diversion gates relies on pneumatic pistons that require 552-689 kilopascals (90-110 psi) of air pressure. The rotational design can be adapted to pipes of different diameters, water depths up to half a pipe depth, and for water velocities up to approximately 5 m/second.

The gates underwent initial mechanical, biological, and efficiency testing at Lower Granite Dam on the Snake River in 1995. A two-way rotational gate was also installed and evaluated at the experimental site at Little Goose Dam (GOX) in 1996 (the 1996-1997 Annual Report covers gate performance at the GOX site).

NMFS began development of two-way and three-way side-to-side gates in 1995 (Fig. 7). The general operating principal behind the system is that fish pass through a flexible hose section that is moved sideways to different passageways. The side-to-side design can be operated with the pipe at any degree of fullness at water velocities up to approximately 5 m/second. A two-way side-to-side gate was installed and evaluated at GOX for the 1996 season.

Conclusions and Recommendations

The side-to-side design has several advantages over the rotational design: it can be operated with the pipe at any degree of fullness, it causes less elevation loss, its fabrication is less costly because it requires fewer custom parts, and it is more easily maintained. However, the side-to-side design takes up more space and thus the characteristics of the particular installation site will dictate which design should be used. Technical and isometric drawings of these diversion gates are available through NMFS or BPA.

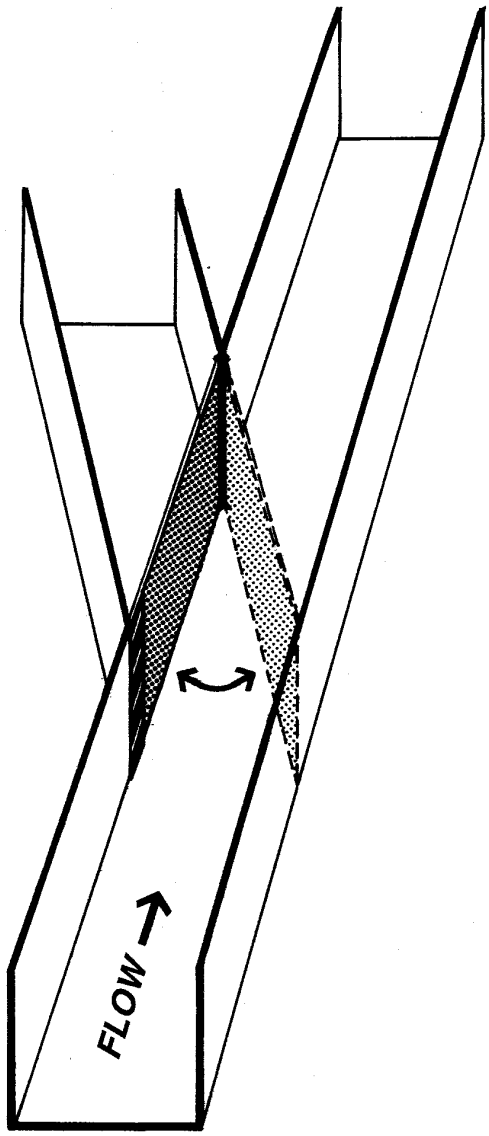

Figure 4. Diagram of a swing gate, a type of fish diversion gate.

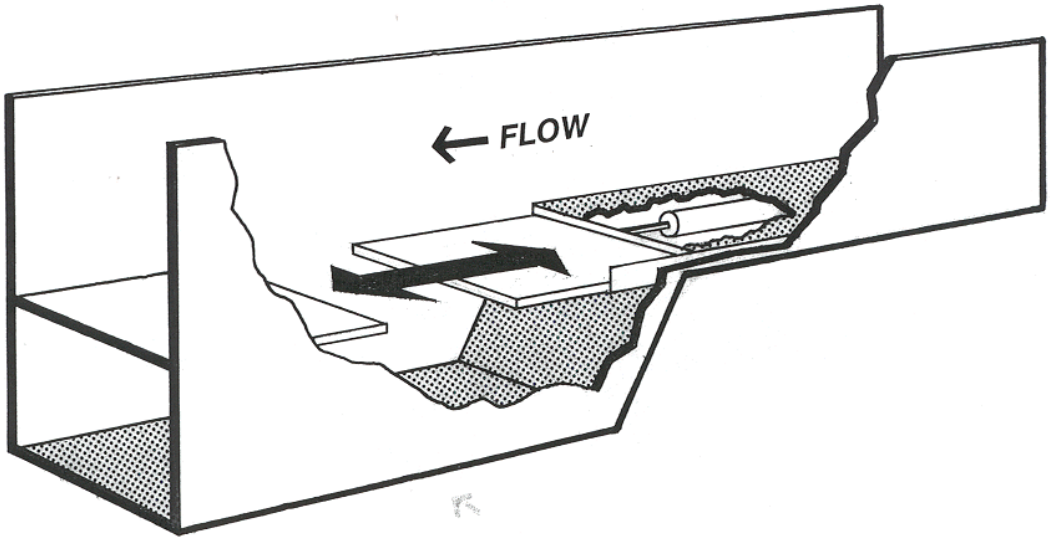

Figure 5. Diagram of a slide gate, a type of fish diversion gate.

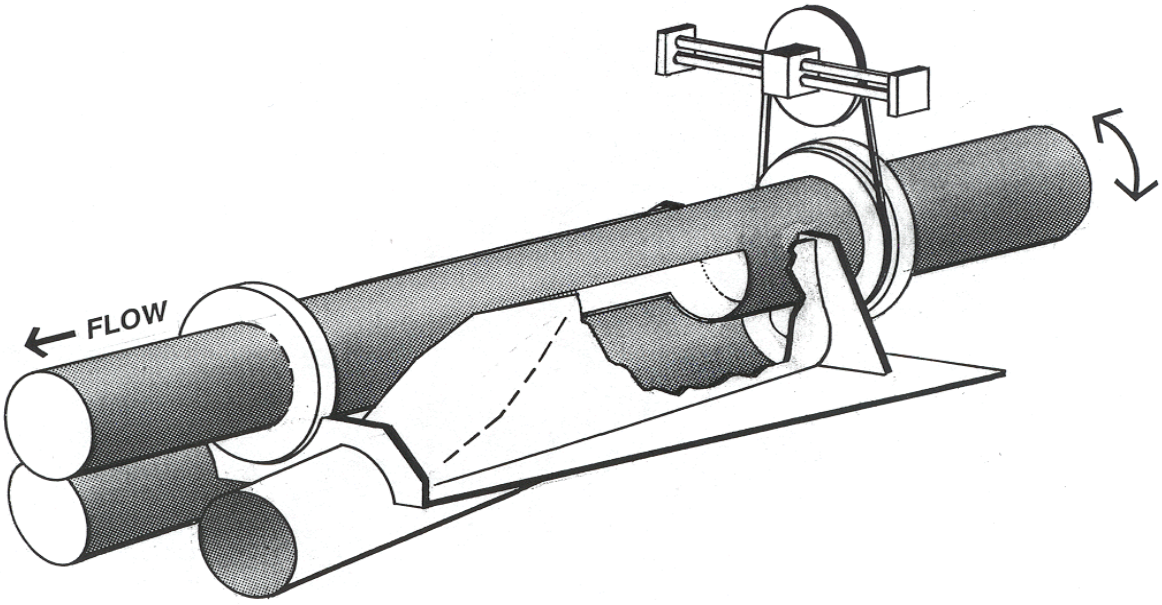

Figure 6. Diagram of a three-way rotational gate, a type of fish diversion gate.

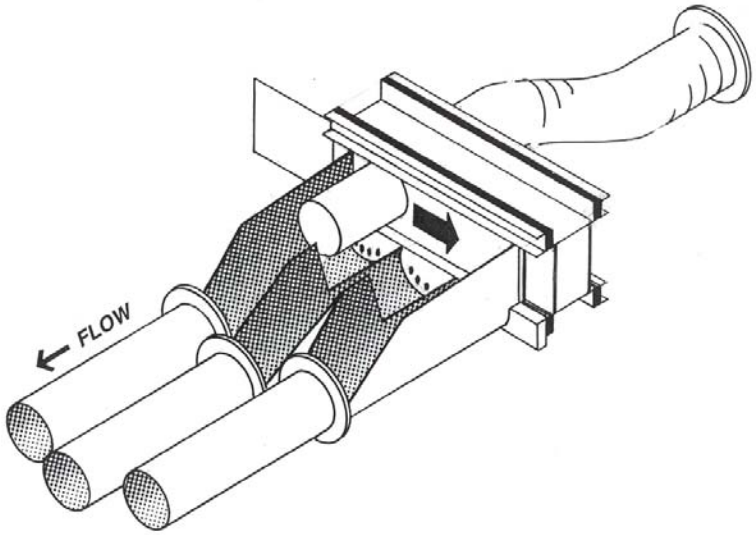

Figure 7. Diagram of a three-way side-to-side gate, a type of fish diversion gate.

Separation-by-Code System: An Evaluation Tool

Introduction

To evaluate the Separation-by-Code system, NMFS constructed a PIT-tag test facility at the NMFS Manchester Research Station that included all of the standard components (e.g., interrogation units and a slide gate) installed in bypass/collection facilities at CRB Dams. During 1992-1993, this Manchester test facility was used primarily to evaluate the computer program BYCODE. Once the basic Separation-by-Code system was working, NMFS recognized that the computer program and the test facility could be used to evaluate modifications considered for installation at PIT-tag facilities. In fact in 1993, an adjustable slide gate and double-read firmware at water velocities of 3 m/second were evaluated with the system.

To determine what modifications would be acceptable for PIT-tag facilities, the following comparisons were evaluated during 1994: 1) performance of single-read firmware versus double-read firmware at a water velocity of 4 m/second; 2) reading and separation efficiencies based on two versus four coils; 3) separation efficiencies at water velocities of 3 versus 4 m/second; and 4) separation efficiencies for two distances between the last coil and diversion gate.

Firmware--Firmware located in computer chips on the reader cards inside of the 400-kHz tag reader is responsible for decoding the PIT-tag signals received from each coil and translating codes into a format usable by the PC computer. It is possible to insert different computer firmware chips. Single-read computer firmware chips (i.e., a chip that processes the first complete hexadecimal code received from a tag) are presently used in PIT-tag interrogation units at the dams. Single-read firmware processes each signal rapidly (12.5 milliseconds); however, single-read firmware also produces occasional erroneous tag codes (< 1% of all tag codes recorded). Although few erroneous codes are generated, there is a possibility that a particular erroneous code could be identical to a correct code, which would create a problem in a Separation-by-Code system.

To avoid erroneous tag-code readings, double-read firmware was written. Double-read firmware is slower (25-40 milliseconds), a factor that could be a problem under certain interrogation conditions, and thus it needs to be evaluated thoroughly before it can be installed at the CRB sites. Double-read firmware read PIT-tag codes as well as single-read firmware at 3 m/second (Prentice et al. 1994), but before it could be installed at the dams, it needed to be evaluated at 4 m/second, which is the fastest water velocity likely to be encountered within any bypass/collection facility in the CRB.

Reading and separation efficiencies based on two versus four coils--Reading efficiency (*RE*) was calculated by determining the percentage of tagged sticks or fish read by at least one coil out of all possible PIT tags used in that trial. When the test facility had two coils, the *RE* for fish was below the acceptable performance rate for the

CRB (≥ 95%; Prentice et al. 1994). Since at most dams there are four coils above each slide gate, NMFS installed a second dual-coil interrogation unit at the test facility in 1994. Four coils should increase the chances of reading a tagged fish when its orientation is satisfactory and permit more time for fish swimming side-by-side to disperse. We needed to confirm that a 4-coil arrangement, connected to the unique hardware of the Separation-by-Code system, would generate acceptable *RE* levels.

The installation of the second dual-coil interrogation unit also permitted testing whether higher separation efficiencies are yielded when the slide gate is triggered by all four coils instead of only two coils as is currently done at the dams. Separation efficiency (*SE*) for each trial was calculated using the theoretical and actual distributions of tagged sticks or fish within the two terminal holding areas based on which tags had been read.

Each PIT-tagged stick or fish that was programmed to be separated could follow one of four scenarios: 1) be read and be separated (correct action), 2) be read and not be separated (wrong action), 3) not be read and be separated (wrong action), and 4) not be read and not be separated (correct action). In scenario 4, the PIT-tagged stick or fish was acting as an untagged fish or as a PIT-tagged stick or fish that was not programmed to be separated. Therefore, fish or sticks in this scenario should not have been separated. Thus, *SE* represents the percentage of correct actions for each trial. Tags that were not read would lower *RE*, while *SE* was determined after incorporating the *RE* information.

Separation efficiencies at water velocities of 3 versus 4 m/second--Most of the 1992-1993 fish trials had been conducted to define procedures for running fish trials. They also yielded *RE* data, but only a few yielded *SE* data. Therefore, in 1994 we focused on running fish trials to learn how to achieve high *SE* values with the Separation-by-Code system. The earlier trials had revealed two reasons why fish often produce low *SE* values: fish exited in groups and they swam in the flume (Prentice et al. 1994).

Fish exiting in groups create a problem because if the gate opens for a targeted fish, some or all of its companions are also separated. However, this problem cannot be avoided with the current designs of fish/debris separators. Swimming in the flume can result in fish programmed to be diverted missing the slide gate and fish not programmed entering the slide gate. Fish were observed swimming in the flume at velocities of 3 m/second. Since most juvenile salmon cannot easily swim for long at velocities of 4 m/second, we investigated whether the higher water velocity might improve *SE*s for fish.

Separation efficiencies for two distances between the last coil and diversion gate-- Prentice et al. (1994) also suggested that *SE*s for tagged fish might be improved if the distance between the last coil and slide gate was minimized. The installation of the second dual-coil interrogation unit made it possible to compare two different distances by triggering the gate with either the two upper coils or the two lower coils.

Methods and Materials

Test facility--The test facility, which simulates a portion of a bypass/collection facility, was modified in 1994 (Fig. 8). It was enlarged to evaluate prototype three-way fish diversion gates (e.g., the rotational gates). Large and small pipe sections were added for these evaluations. The large pipe section could be used for testing gates or coils measuring 25 or 30 cm in diameter and the small pipe section could be used for testing gates or coils measuring 10 or 15 cm in diameter. Furthermore, both pipe sections could be raised or lowered with pulleys to test different water velocities and hydraulic conditions. A third pump was installed to increase water flow during tests requiring the larger pipe section and 4-m/second water velocity.

Several changes were made to the original rectangular flume. A second dual-coil interrogation unit was installed whose final coil was 1.7 m above the slide gate compared to the 3.3-m distance of the original interrogation unit. A PLC was installed to replace an older-style slide-gate controller. This allowed all of the gates to be controlled with a centralized gate controller. Aluminum covers were built to be placed over the main slide-gate flume to darken the flume to the same level as the interrogation units during tests using fish.

Evaluating the modifications--The same general procedure was used for evaluating the four modifications to the PIT-tag system described above (i.e., firmware, number of coils, water velocity, distance between the last coil and diversion gate). Tests were conducted with PIT-tagged sticks and juvenile coho salmon (*Oncorhyncus kisutch*) whose fork lengths ranged from 150 to 225 mm. Tagged sticks were employed because both their rate of entry and orientation could be better controlled than with fish. Fish often passed through an interrogation unit in groups and at various angles; both of these can potentially reduce *RE*s and *SE*s. Therefore, modifications were first tested with sticks followed by tests with fish.

More stick trials than fish trials were conducted to evaluate the four modifications because of the time it took to perform fish trials (Table 1). Before each trial, the test facility was configured for that particular evaluation (i.e., depending on the trial, different coils would be turned on or off, different water velocities would be used, different reader firmware installed, etc). Each trial consisted of 50 tags in which 20, 50, or 80% of the PIT-tagged sticks or fish per trial had been programmed to be diverted.

Fish and stick tag-codes were appended to an existing Tag Database file containing 200,000 tag codes. Sticks or fish were then randomly introduced into the flume leading to the PIT-tag interrogation coils and slide gate. After passing through the slide-gate system, the final destinations of the individual sticks and fish were determined. This actual distribution was then compared to the theoretical distribution determined by the computer program for calculating *SE*s. Since it was necessary to increase the opening

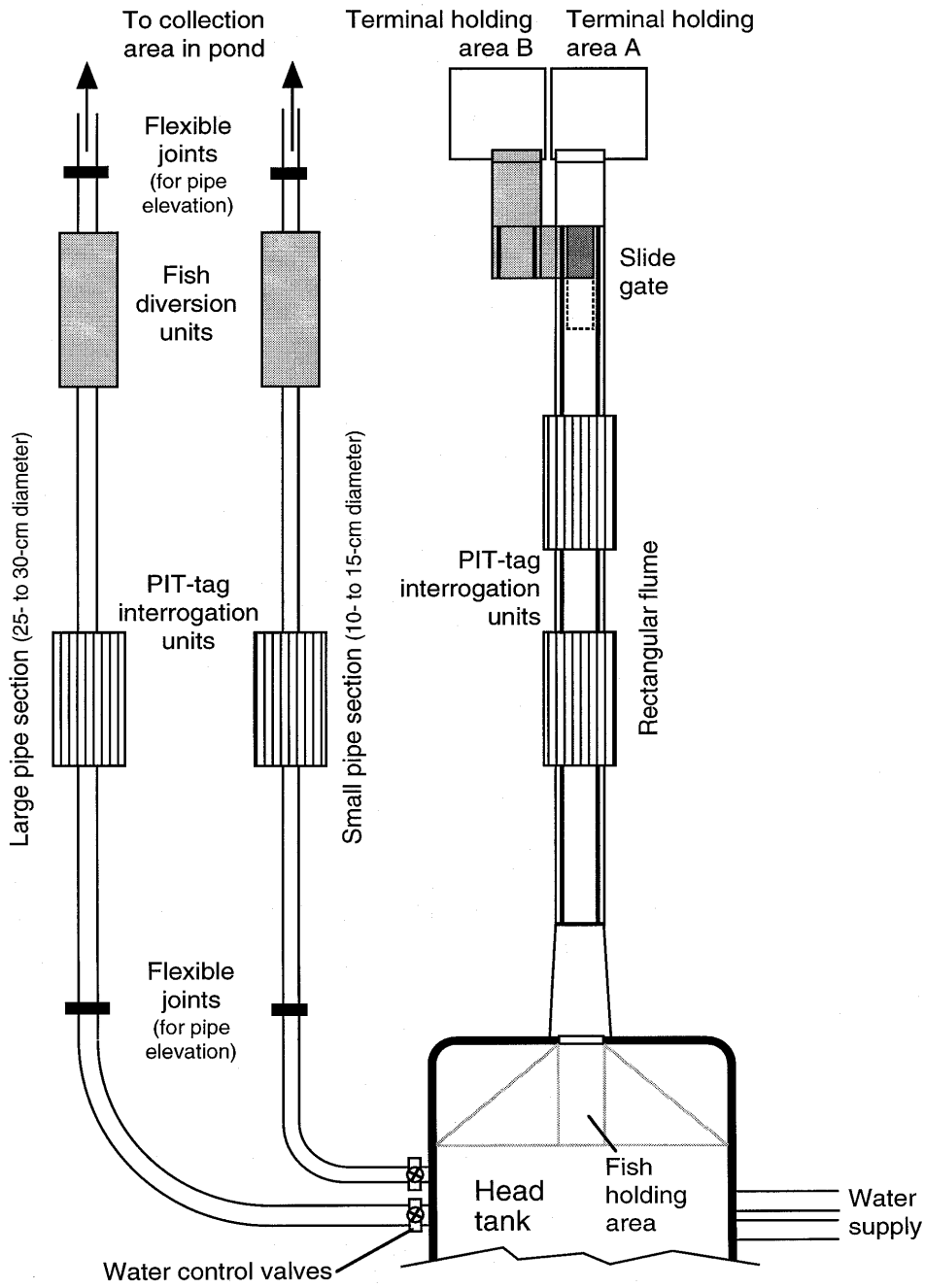

Figure 8. Diagram of the enlarged PIT-tag test facility located at the NMFS Manchester Research Station.

Table 1. The conditions and numbers for the different stick and fish trials performed for the four evaluations. Each trial used 50 PIT tags.

Possible configurations	Stick trials	Fish trials
Upper two-coils, SR[a], 3 m/sec	15	5
Upper two-coils, DR[b], 3 m/sec	15	5
Lower two-coils, SR, 3 m/sec	15	5
Lower two-coils, DR, 3 m/sec	15	5
Upper two-coils, SR, 4 m/sec	15	5
Upper two-coils, DR, 4 m/sec	15	5
Lower two-coils, SR, 4 m/sec	15	5
Lower two-coils, DR, 4 m/sec	15	5
Four-coils, SR, 3 m/sec	30	10
Four-coils, DR, 3 m/sec	30	10
Four-coils, SR, 4 m/sec	30	10
Four-coils, DR, 4 m/sec	30	10

[a] SR is an abbreviation for single-read firmware.
[b] DR is an abbreviation for double-read firmware.

of the slide gate from 45 to 58 cm to accommodate the 4-m/second water velocity, this slide gate opening was used for all trials.

Statistics--There was no difference in the results whether 20, 50, or 80% specifically tagged sticks or fish were separated, and consequently the data from all of these trials were combined to evaluate the main elements. Independent t-tests were used to compare *RE*s and *SE*s for 1) the two firmwares at 4 m/second; 2) two versus four coils; 3) 3- versus 4-m/second water velocities; and 4) using the upper or lower interrogation units to trigger the slide gate. Significance was established at $P \leq 0.05$.

Results and Discussion

Modifications to the test facility proved to be satisfactory. The flexibility in the facility design allowed all of the reported evaluations to be conducted and provides a platform from which future tests can be conducted in both rectangular flumes and pipes of varying sizes. Below the four evaluations are presented separately.

Firmware--In all of the single-read computer firmware stick and fish trials, 0.3% (n = 27) of the tag codes were incorrectly processed. The erroneous tag codes typically contained single hexadecimal digits that have been misread and replaced. No erroneous tag codes were produced by the double-read firmware.

Results for stick and fish trials using the four-coil arrangement at 4 m/second demonstrated that the *RE* and *SE* performance for double-read firmware was equivalent to that of the single-read firmware (Table 2). In stick trials for both firmwares, all sticks were read, and only one stick was not diverted successfully. Although more fish than sticks were not read and missed by the slide gate, there were still no significant differences in *RE*s ($P = 0.883$) or *SE*s ($P = 0.561$) between single-read and double-read firmware. For both types of firmware, average *RE*s were approximately 98% (based on four coils) and average *SE*s were close to 88%.

It is not surprising that double-read firmware did well at 4 m/second because each PIT tag remains within a coil's electromagnetic field for almost 80 milliseconds at 4 m/second, and thus there is sufficient time for PIT-tag codes to be processed by double-read firmware, which takes a maximum of 40 milliseconds to process tag codes. To avoid potentially harmful erroneous tag codes, NMFS supports incorporating double-read firmware into the interrogation systems at the CRB dams.

However, after NMFS finished its tests, Destron-Fearing (the manufacturer of the PIT-tags used in the CRB) produced a new generation of 400-kHz tags. In these new Generation-2 PIT tags, Destron-Fearing replaced the Manchester encoding error-checking method with the faster and more accurate cyclic-redundancy-check (CRC) method. The CRC method will produce an almost errorless format (1 error in 10^6 reads). Destron-

Table 2. Overall average reading efficiencies (*RE*s) and separation efficiencies (*SE*s) for the two firmwares. Standard deviations are shown in parentheses. Probability values are derived from t-tests.

	Overall *RE* (%)	Overall *SE* (%)
Sticks		
Single-read firmware(4 m/sec, 4 coils)	100.0 (0.0)	99.9 (1.3)
Double-read firmware (4 m/sec, 4 coils)	100.0 (0.0)	100.0 (0.0)
Probability value	1.000	0.321
Fish		
Single-read firmware (4 m/sec, 4 coils)	98.2 (3.3)	88.9 (6.1)
Double-read firmware (4 m/sec, 4 coils)	98.4 (2.6)	87.3 (4.6)
Probability value	0.883	0.561

Fearing also wrote new single-read firmware for these Generation-2 tags that promises to eliminate the erroneous tag-code problem and read tags in 19 milliseconds. Pacific States Marine Fisheries Commission (PSMFC) will install these CRC firmware chips into CRB PIT-tag interrogation equipment for the 1996 juvenile outmigration.

Because there was no difference in performance, the single-read and double-read firmware results were combined for the other evaluations.

Reading and separation efficiencies based on two versus four coils--Although individual coils often had *RE*s below 100%, the four-coil combination detected all but one tag that was introduced into the interrogation system during 120 stick trials (60 trials each at water velocities of 3 and 4 m/second) that represented a total of 6,000 tags (Table 3). When only two of the four coils were active, several tags were not read as the flowing water would change the tag orientation, especially at 4 m/second (97.9 ±2.9%; ±SD). Consequently, average *RE* for the four-coil arrangement was significantly higher than for the two-coil arrangement at 4 m/second ($P < 0.001$). Sticks were individually introduced at 1- to 2-second intervals, and therefore if they were read then the slide gate usually separated them successfully. There was a significant difference between the two coil arrangements at 3 m/second ($P < 0.001$); however, with the lower value being so high at 99.2%, there does not seem to be a reasonable explanation for the statistical difference.

Increasing the number of interrogation coils from two to four significantly improved the ability to detect fish (Table 3). At 3 m/second, average *RE* for the four-coil arrangement (98.3 ± 4.5%) was significantly higher ($P = 0.024$) than average *RE* for the two-coil arrangement (93.6 ± 7.3%; Table 3). At 4 m/second, average *RE* for the four-coil arrangement (98.3 ± 2.9%) was also significantly higher ($P < 0.001$) than average *RE* for the two-coil arrangement (93.8 ± 4.7%). However, average *SE*s for fish were not significantly improved by utilizing all four coils at either 3 m/second ($P = 0.322$) or 4 m/second ($P = 0.171$; Table 2). The *SE*s for both two- and four-coil arrangements ranged between 86.1 and 90.2%.

Using four coils instead of two coils did significantly increase the *RE* for fish. The four-coil arrangement increased *RE*s significantly because fish rarely travel side-by-side for long. However, *SE*s were not increased. Matthews et al. (1990) demonstrated that the number of fish separated each time a slide gate opens is basically a constant, which depends on the density of fish passing through the flume. The value of this constant, which will be directly proportional to the *SE* value, will be different for each gate setup (e.g., it will depend on such things as gate delay and open times, distance from last coil, and water velocity). In other words, *SE* values did not increase as more targeted tags were read with the four-coil arrangement because the same ratio of targeted and untargeted fish were separated each time the slide gate opened. Although the two- and four-coil arrangements yielded similar *SE*s, overall more targeted fish would be separated with the four-coil arrangement than a two-coil arrangement because more of them would be read.

Table 3. Overall average reading efficiencies (*RE*s) and separation efficiencies (*SE*s) for the 2-coil and 4-coil configurations. Standard deviations are shown in parentheses. Groups were statistically compared using t-tests.

	Overall *RE* (%)	Overall *SE* (%)
Sticks		
Two-coil arrangement (3 m/sec, upper or lower)	99.6 (2.8)	99.2 (1.3)
Four-coil arrangement (3 m/sec)	99.9+ (0.3)	99.9* (0.4)
Two-coil arrangement (4 m/sec, upper or lower)	97.9 (2.9)	100.0 (0.0)
Four-coil arrangement (4 m/sec)	99.9* (0.5)	99.9+ (0.3)
Fish		
Two-coil arrangement (3m/sec, upper or lower)	93.6 (7.3)	87.9 (5.2)
Four-coil arrangement (3 m/sec)	98.3* (4.5)	86.1 (3.7)
Two-coil arrangement (4 m/sec, upper or lower)	93.8 (4.7)	90.2 (3.2)
Four-coil arrangement (4 m/sec)	98.3* (2.9)	88.1 (5.2)

* For these comparisons, the four-coil combination yielded a significantly higher average than the two-coil setup (P values are given in the text).

Separation efficiencies at water velocities of 3 versus 4 m/second--All sizes of test fish (fork lengths of 150-225 mm) were observed swimming upstream in the 3-m/second flow, while only the larger coho salmon were observed swimming for long in the 4-m/second flow. Although not statistically significant, average *SE*s were approximately 2% higher at 4 m/second than at 3 m/second whether the comparison was made for two or four coils (Tables 3 and 4). The higher water velocity created more turbulence within the rectangular flume, which appeared to cause fish to swim more actively to correct for the turbulence. Smaller fish could not swim for long, but larger coho salmon would unpredictably hold in the flume long enough to affect the *SEs,* just as they did in water velocities of 3 m/second. Exchanging the rectangular flume for a pipe or round-bottom flume should reduce the turbulent water conditions and therefore help improve the separation at 4 m/second.

Separation efficiencies for two distances between the last coil and diversion gate--The shorter distance between the lower interrogation unit and slide gate yielded slightly higher *SE*s than the longer distance between the upper interrogation unit and the gate, but the increase in *SE*s was not significant at 3 m/second (P = 0.381) or at 4 m/second (P = 0.805; Table 4). However, if only those tags that were targeted to be diverted are considered, one can calculate a diversion efficiency by combining the *RE*s and *SE*s (*DE* = percentage of the tags read that were programmed to be diverted and were successfully diverted). The calculated *DE*s show that programmed fish that were read were separated significantly better over the shorter distance at both 3 m/second (P = 0.003) and 4 m/second (P = 0.033; Table 4). At both velocities, *DE*s were approximately 90% for the upper interrogation unit and close to 97% for the lower interrogation unit.

The 1.7- and 3.3-m distances between the last coil of the two interrogation units and the slide gate in this study are fairly typical of distances found at CRB dams. Although *SE*s were not significantly improved with the shorter 1.7-m distance, the significant improvement in *DE*s was dramatic. The *DE*s for the lower two-coil and four-coil arrangements were similar (all around 97%). Therefore, NMFS recommends that for future PIT-tag installations, diversion gates be installed at around 1 m (maximally 2 m) from the last interrogation coil. This would permit a higher percentage of PIT-tagged fish to be successfully diverted.

Conclusions and Recommendations

Results for stick and fish trials using the four-coil arrangement at 4 m/second demonstrated that the *RE* and *SE* performance for double-read firmware was equivalent to the performance of the single-read firmware. Furthermore, the double-read firmware did not produce a single erroneous tag code. Thus, to avoid the potentially harmful erroneous tag codes, NMFS supports incorporating double-read firmware into the interrogation systems at the CRB dams. However, after NMFS finished its tests, Destron-Fearing

Table 4. Overall average separation efficiencies (*SE*s) and diversion efficiencies (*DE*s) for the two distances from the last coil to the diversion gate. Standard deviations are shown in parentheses. Groups were statistically compared using t-tests.

	Overall *SE* (%)	Overall *DE*[a] (%)
Two-coil arrangement(3m/sec, upper 2 coils)	86.8 (6.2)	88.1 (5.9)
Two-coil arrangement(3m/sec, lower 2 coils)	89.1 (4.1)	96.9[b] (3.8)
Two-coil arrangement(4 m/sec, upper 2 coils)	89.9 (3.7)	92.7 (3.1)
Two-coil arrangement(4 m/sec, lower 2 coils)	90.5 (2.8)	96.6[b] (3.2)

[a] *DE* = (RE*(SE/100)).

[b] In these comparisons, the lower 2 coils yielded a significantly higher average than the upper 2 coils (P values are given in the text).

produced a new generation of 400-kHz tags that incorporated the more accurate CRC method for error checking. Therefore, PSMFC will install these CRC firmware chips into PIT-tag interrogation equipment for the 1996 juvenile outmigration.

Increasing the number of interrogation coils from two to four coils significantly improved the ability to detect fish. At 3 m/second, average *RE* for the four-coil arrangement (98.3 ± 4.5%) was significantly higher ($P = 0.024$) than average *RE* for the two-coil arrangement (93.6 ± 7.3%). At 4 m/second, average *RE* for the four-coil arrangement (98.3 ± 2.9%) was also significantly higher ($P < 0.001$) than average *RE* for the two-coil arrangement (93.8 ± 4.7%).

Although not statistically significant, average *SE*s were approximately 2% higher at 4 m/second than at 3 m/second whether the comparison was made for two or four coils. The 4-m/second water velocity created more turbulence within the rectangular flume than did the 3-m/second water velocity. This greater turbulence appeared to cause the fish to swim more actively to correct for the turbulence. The smaller fish could not swim for long, but the larger coho salmon would unpredictably hold in the flume long enough to affect the *SE*s just as they did in water velocities of 3 m/second. Exchanging the rectangular flume for a pipe or round-bottom flume should reduce the turbulent water conditions and therefore help improve separation at 4 m/second.

The shorter distance between the lower interrogation unit and slide gate yielded slightly higher *SE*s than the longer distance between the upper interrogation unit and the gate, but the increase in *SE*s was not significant at 3 m/second ($P = 0.381$) or at 4 m/second ($P = 0.805$). Calculated *DE*s showed that the programmed fish that were read were separated significantly better over the shorter distance at both 3 m/second ($P = 0.003$) and 4 m/second ($P = 0.033$). At both velocities, *DE*s were <90% for the upper interrogation unit and close to 97% for the lower interrogation unit.

Therefore, NMFS recommends that for future PIT-tag installations, diversion gates be installed at around 1 m (maximally 2 m) from the last coil. This would permit a higher percentage of PIT-tagged fish to be successfully diverted.

Evaluation of Three Generations of 400-kHz Transponders

Introduction

The 400-kHz PIT tags used throughout the CRB are purchased from Destron-Fearing Inc. All of the PIT tags used to tag fish before 1995 contained Atmill computer chips. When Atmill computer chips became unavailable, Destron-Fearing converted to Eurocell chips for their production tags. Tags containing Atmill computer chips were designated as Generation-1 PIT tags and those with Eurocell chips as Generation-2 PIT tags. As previously explained, these Generation-2 PIT tags were also different because they contained CRC error checking.

Generation-2 PIT tags were delivered to the CRB fisheries community for the 1995 season, but they were not evaluated before they were delivered. Soon after salmon started to migrate through the CRB bypass/collection facilities in 1995, PSMFC personnel observed that PIT-tag reading efficiencies for Generation-2 tags were significantly less than those for Generation-1 tags. The fisheries community sought to find out why and to determine if anything could be done immediately to improve the reading efficiencies. NMFS electronic engineers investigated and discovered that the return signals for Generation-2 tags were one-third less than for Generation-1 tags. This lower return signal would explain why some Generation-2 tags might not be read in the electronically noisy environments at the dams.

Destron-Fearing then determined that by modifying the receive circuitry in the exciter boards, electronic noise affecting the return signal would be reduced. This meant that to improve reading efficiencies at the dams, each exciter board (one per coil) throughout the entire CRB had to be modified after the migration season had begun. In addition, laptops running the BYCODE computer program and some necessary hardware were installed so that the slide gates could be triggered using all four coils instead of the normal setup that used only the two lower coils. All of the modifications were completed before the peak migration period; however, some data were obviously lost during the weeks before the modifications were in place.

The exciter modifications did increase the reading efficiencies of Generation-2 tags; however, even after the changes, reading efficiencies during the 1995 outmigration season were lower for Generation-2 tags than for Generation-1 tags (Carter Stein, unpubl. data, PSMFC, 45 SE 82nd Dr., Suite 100, Gladstone, Oregon 97027-2522). The discrepancy between reading efficiencies was < 5% for individual coils that have traditionally yielded reading efficiencies above 90%, but for coils with reading efficiencies normally below 85%, the median discrepancy was closer to 15%. This suggested that Generation-2 tags were less likely to be read under marginal conditions, such as where turbulence causes poor fish orientation.

An additional reason for the lower reading efficiencies observed might be that the high excitation levels maintained at the dams were turning off the computer chips in the

Generation-2 tags. The improved silicon in the computer chips means that Generation-2 tags require less power to energize them than Generation-1 tags. This means they turn on (become active) farther away from a coil, but it also means that a lower level of high power is necessary to turn them off. Therefore, it might be possible that a Generation-2 tag would be turned on as it approached a coil, but before its weaker return signal could be decoded, the tag would be turned off when it entered the stronger electromagnetic field within the actual coil. This potential cause was not examined during the 1995 season.

In an attempt to return the performance of their 400-kHz PIT tags to Generation-1 levels, Destron-Fearing switched to Hughes Microelectronics computer chips (Generation-3 tags) in September 1995. In order to avoid the in-season problems experienced in 1995, BPA asked NMFS to evaluate the Generation-3 tags before PSMFC bought them. Performance of all three generations of tags was compared using the PIT-tag test facility at NMFS Manchester Research Station. Effects of tag orientation (to simulate marginal reading conditions) and different excitation levels were examined.

Methods and Materials

The 10-cm- and 25-cm-diameter pipe sections at the PIT-tag test facility at Manchester (see Fig. 8) were used for this tag evaluation. Four interrogation coils are installed on each pipe. During testing, water velocity was maintained at approximately 3 m/second. Although no tag separation was done, the tag-reading data were recorded using the BYCODE computer program. A new computer file was generated for each replicate during the evaluation. To evaluate the tags, 15 tags from each generation were used. The tags were inserted into 15-cm wooden sticks whose ends were drilled to keep the tags securely in either optimal 0° orientation (tags inserted parallel to the long axis of the stick) or in marginal orientation (tags inserted at 45° angles to the long axis). For each replicate, all tags were either inserted at 0° orientation or at 45° orientation. Sticks were introduced individually into the pipes at intervals of 2-3 seconds.

Orientation--The 10-cm-diameter pipe was used in the evaluation of effects of orientation on reading efficiency because its narrow size kept the floating wooden sticks perpendicular to the coils so that tag orientation would not change during a test. The 15 tags from the three generations were fed through the pipe 10 times in both orientations. During these tests, excitation power levels were maintained at the 1.00-A setting, which is the standard level for the CRB.

Excitation level--The 25-cm-diameter pipe was used in the evaluation of effects of excitation level on reading efficiency. The larger pipe allowed the wooden sticks to rotate slightly from side to side in the flowing water, and thus more closely simulated fish passage through PIT-tag interrogation systems. Only tags in the optimal 0° orientation were used. Three excitation power settings were examined: 1.00 (normal level), 0.75, and 0.55 A. Twenty replicates were run at 1.00 A, 10 replicates at 0.75 A, and 6 replicates at 0.55 A.

Statistics--At the end of each replicate, the computer data file was analyzed to determine individual PIT-tag interrogation coil reading efficiencies. The number-of-coils-read/tag was also generated (maximum was 4 coils/tag). These numbers were then used in one-way analyses of variance (ANOVAs) to compare the effects of orientation and excitation power level on the three generations of tags. The significance level was established at $P \leq 0.05$. Significant F values were further analyzed with Tukey tests.

Results and Discussion

Orientation--With tags in the optimal 0° orientation, none of the Generation-1 tags was missed by an interrogation coil, while both Generation-2 and Generation-3 tags were occasionally missed by one coil during a replicate (Table 5). However, the resulting number-of-coils-read/tag averages for each generation (4.00, 3.95, and 3.95 for Generations 1, 2, and 3, respectively) were not significantly different ($P = 0.090$). In contrast, when the tags were tested at the 45° orientation, no Generation-3 tags and only one Generation-2 tag were read by all 4 coils in all 10 replicates, while most of the Generation-1 tags were read by all 4 coils. The resulting number-of-coils-read/tag averages for each generation were significantly different ($P < 0.001$; Table 5). A Tukey test separated the Generation-1 average (3.95 number-of-coils-read/tag) from those of the other two generations (3.13 and 3.09 number-of-coils-read/tag for Generation-2 and Generation-3 tags, respectively).

These results supported the contention that poor tag orientation combined with reduced return-signal strength were significant causes for the lower reading efficiencies by Generation-2 tags within the CRB during the 1995 season. They also suggested that under normal monitoring conditions, Generation-3 tags would not be an improvement over Generation-2 tags and that a further decrease in tag reading efficiency could be expected.

Excitation level--If the poor performance observed in the 10-cm pipe was from high excitation power levels, then Generation-2 and Generation-3 tags should have done better at lower exciter settings. However, results from the excitation level evaluation indicated that performance of Generation-2 tags did not change over the three exciter power settings ($P = 0.335$; Table 6). The number-of-coils-read/tag averages for Generation-2 tags were 3.56, 3.56, and 3.70 for 1.00-, 0.75-, and 0.55-A settings, respectively. Although the performance of Generation-3 tags was significantly different at the three settings ($P < 0.001$), it did not follow a logical sequence. The number-of-coils-read/tag average was lowest at the 0.75-A setting ($\bar{X} = 2.53$) and highest at 1.00 A ($\bar{X} = 3.25$). In fact for some unknown reason, 11 tags out of 150 tags were completely missed at the 0.75-A setting. The Tukey test indicated that the 0.75-A average was significantly different from the 1.00-A and 0.55-A averages for Generation-3 tags.

Table 5. Number-of-coils-read/tag averages are presented for the three generations of tags from the tag-orientation test. Fifteen tags were used in 10 replicates to generate each average. Standard deviations are shown in parentheses. P values are from one-way ANOVAs. Superscript letters are used to distinguish significantly distinct groupings from a Tukey test.

Tag orientation	Gen. 1	Gen. 2	Gen. 3	P value
0° Orientation				
Average SD	4.00(0.00)	3.95(0.23)	3.95(0.23)	0.090
45° Orientation				
Average SD	3.95^{a}(0.22)	3.13^{b}(0.76)	3.09^{b}(0.73)	<0.001

Table 6. Number-of-coils-read/tag averages are presented for the three generations of tags from the excitation level test. Fifteen tags were used in 10 replicates to generate each average. Standard deviations are shown in parentheses. P values are from one-way ANOVAs. Superscript letters are used to distinguish significantly distinct groupings from Tukey tests among the generations and superscript numbers for results from the Tukey test analyzing the significant within-generation ANOVA.

Excitation level	Gen. 1	Gen. 2	Gen. 3	P value
1.00 Amp				
Average SD	3.79^{a} (0.54)	3.56^{b} (0.83)	$3.25^{c,1}$ (0.98)	<0.001
0.75 Amp				
Average SD	3.86^{a} (0.46)	3.56^{b} (0.85)	$2.53^{c,2}$ (1.28)	<0.001
0.55 Amp				
Average SD	3.79^{a} (0.68)	3.70^{a} (0.71)	$3.02^{b,1}$ (0.99)	<0.001
P value-within generation	0.436	0.335	<0.001	

Conclusions and Recommendations

The overall results strongly indicate that Generation-1 tags performed significantly better than both Generation-2 and Generation-3 tags, as they had significantly higher number-of-coils-read/tag averages when the tags were in marginal orientation and at all three exciter power settings (Tables 5 and 6). Results from excitation tests proved that the poor performance by the Generation-2 and Generation-3 tags was not from being turned off by high excitation power levels. In comparing Generation-2 and Generation-3 tags only, Generation-2 tags had significantly higher averages than Generation-3 tags at all three exciter power settings. These results suggest that under normal monitoring conditions, Generation-3 tags would not be an improvement over Generation-2 tags. Destron-Fearing is working on another modification to the Generation-3 tag (increasing its signal modulation). This change was not made before PSMFC's ordering deadline of December 1995 and consequently, based on the above results, PSMFC ordered Generation-2 tags for the 1996 season.

Evaluation of Generation-3B PIT Tags

Introduction

Since the fisheries community would prefer to buy tags that match the performance of Generation-1 tags, NMFS recommended that the modified Generation-3 tags (Generation-3B tags) be tested when they were produced by Destron-Fearing. Destron-Fearing brought Generation-3B tags to Manchester in February 1996 when the following evaluation was performed.

Methods and Materials

In this evaluation, tag orientation tests were run in both the 10-cm and 25-cm pipe sections. Thirty-five-cm sticks were used, which allowed tags to be inserted on both ends. Thus, tags were inserted at 0° orientation on one end and 45° orientation on the other. Instead of 15, only 10 tags from each generation were tested in each orientation. The full complement of 20 Generation-3A tags was not available and so only 10 tags inserted at 45° were used. Ten replicates were run in each pipe.

The number-of-coils-read/tag numbers were used to run one-way ANOVAs to compare the effects of orientation on the three generations of tags. The significance level was established at $P \leq 0.05$. Significant F values were further analyzed with Tukey tests.

Results and Discussion

In the 10-cm pipe with tags in the optimal 0° orientation, none of the Generation-1 tags was missed by an interrogation coil, while only two tags were missed by interrogation coils for Generation-3B tags. In contrast, at least one Generation-2 tag was missed by one coil in every replicate. Consequently, the resulting number-of-coils-read/tag averages for each generation (4.00, 3.71, and 3.98 for Generations 1, 2, and 3B, respectively) were significantly different ($P < 0.001$; Table 7). A Tukey test separated the Generation-1 and Generation-3B tags from the Generation-2 tags.

In the 10-cm pipe with tags in the marginal 45° orientation, more tags were missed by all of the generations. The number-of-coils-read/tag averages for each generation were significantly different ($P < 0.001$) among generations (Table 7). A Tukey test separated the Generation-1 and Generation-3B averages (3.78 and 3.85 number-of-coils-read/tag for Generation-1 and Generation-3B tags, respectively) from the other two generations (2.75 and 2.77 number-of-coils-read/tag for Generation-2 and Generation-3A tags, respectively).

Table 7. Number-of-coils-read/tag averages are presented for the three generations of tags from the tag orientation tests performed in the two pipes. Ten tags were used in 10 replicates to generate each average. Standard deviations are shown in parentheses. P values are from one-way ANOVAs. Superscript letters are used to distinguish significantly distinct groupings from Tukey tests among the generations.

		0° orientation	45° orientation
10-cm pipe			
Generation 1			
Average	SD	4.00^{a}(0.00)	3.78^{a}(0.42)
Generation 2			
Average	SD	3.71^{b}(0.48)	2.75^{b}(0.67)
Generation 3A			
Average	SD	--------	2.77^{b}(0.66)
Generation 3B			
Average	SD	3.98^{a}(0.14)	3.85^{a}(0.36)
P value		<0.001	<0.001
25-cm pipe			
Generation 1			
Average	SD	4.00(0.00)	3.90^{a}(0.36)
Generation 2			
Average	SD	4.00(0.00)	3.21^{b}(1.23)
Generation 3A			
Average	SD	--------	2.42^{c}(1.22)
Generation 3B			
Average	SD	3.97(0.17)	3.87^{a}(0.42)
P value		0.381	<0.001

In the 25-cm pipe, with tags in the optimal 0° orientation, almost no tags were missed by any interrogation coils and the ANOVA showed no statistically significant differences ($P = 0.381$; Table 7). With tags in the marginal 45° orientation, tags were completely missed by all four coils for both Generation-2 and Generation-3A tags while none of the Generation-1 and Generation-3B tags was missed completely. The ANOVA showed statistically significant differences ($P < 0.001$), and the subsequent Tukey test separated the four groups into three groupings: 1) Generation-1 and Generation-3B tags, 2) Generation-2 tags, and 3) Generation-3A tags.

Conclusions and Recommendations

The results from this February 1996 evaluation strongly suggest that under normal monitoring conditions, these Generation-3B tags will perform as well as the original Generation-1 tags. Therefore, NMFS recommends that the fisheries community use these Generation-3B tags. Unfortunately, these tags were not available for the 1996 spring tagging season, but were for the summer and fall tagging seasons.

Toxicity Evaluation of the Dye used to Detect Broken PIT-tag Casings

Introduction

PIT tags are subjected to a series of quality-control tests during their manufacture. Pressure tests are conducted to detect cracks or damage in the glass that encapsulates the tags. For these pressure tests, the newly produced tags are placed in a container with a dye and pressurized at 413.7 kPa (60 psi) for 2 hours. During this time, the dye penetrates broken tags and makes them easy to identify. After this exposure the tags are removed, air dried thoroughly, and the broken ones are rejected.

In 1993, Destron-Fearing switched their tag manufacturing to Hughes Microelectronics in Spain. Hughes Microelectronics uses a green dye produced in Spain in its pressure tests. At one time in the 1980s, Destron Inc. (Previous name of Destron-Fearing) used a red dye that NMFS subsequently determined was lethal to fish. They immediately discontinued its use after NMFS notified them of the problem. Because of this past problem, a 72-hour survival study was conducted with the green dye to determine whether or not it was toxic to fish.

Methods and Materials

The test dye, mint green dye #1732, is manufactured by Aromas Maluquer SA and it contains American Food Yellow 5 and Food Blue 5 in addition to some proprietary ingredients. To start our evaluation, one batch of PIT tags was soaked in the test dye (70 ppm) and a second batch soaked in 100% ethanol for 72 hours. All of the PIT tags were air dried for 2 hours prior to use.

On 3 October 1994, presmolt coho salmon were randomly divided into four groups of 30 fish: 1) those injected with regular PIT tags that had been soaked in ethanol, 2) those injected with dyed PIT tags, 3) those injected with 0.5 mL of dye, and 4) those fin-clipped that represented controls. All fish were anesthetized with Tricaine Methanesulfonate (MS-222) before being handled. Group 3 was injected intraperitoneally with 0.5 mL of the dye using an automatic dispenser and a 27-gauge needle. Groups 1 and 2 were PIT-tagged using the procedure described by Prentice et al. (1990b) and Group 4 was fin-clipped using standard procedures. Fork lengths were measured to the nearest millimeter and weights were taken to the closest 0.1 g on 10 fish from each group. All groups were held for 72 hours in a 1.2-m circular tank and monitored for survival and unusual behavior.

One-way ANOVAs were used to compare fork lengths and weights of the four groups at the time they were tagged. Statistical significance was set at $P \leq 0.05$. Since no mortality occurred during the test, no statistics were conducted on the survival data.

Results and Discussion

When the fish were tagged, there was no significant difference in fork lengths (P = 0.259) or weights (P = 0.451) among the four groups (Table 8). There were no mortalities during the 72-hour observation period and fish behavior was normal.

Conclusions and Recommendations

Since the dye (mint green dye #1732) does not appear to be lethal to fish or cause abnormal behavior, NMFS concludes that it is an acceptable dye for the pressure-testing procedure.

Table 8. Average fork lengths and weights of 10 individuals from the four groups of coho salmon at the time of tagging. Standard deviations are shown in parentheses. P values are from one-way ANOVAs.

	Regular PIT tags	Dyed PIT tags	Injected dye	Control	P value
Weight (g)					
Average SD	12.4 (2.5)	13.1 (2.6)	11.5 (3.1)	13.1 (1.9)	0.259
Fork length (mm)					
Average SD	103.8 (7.9)	109.0 (12.3)	104.7 (10.3)	111.3 (6.7)	0.451

Electromagnetic Field Effects on Reproducing Fish:
Medaka (*Oryzias latipes*)

Introduction

PIT-tag interrogation systems that monitor juvenile and adult salmon as they move through bypass/collection facilities at CRB Dams are an integral part of the PIT-tag program. The PIT-tag interrogation units currently used to monitor migrating salmon operate at 400 kHz. In the future, operating frequencies between 120 and 135 kHz will have to be used if the fisheries community is to reach its goal of interrogating returning adult salmon in fish ladders (Prentice et al. 1993, Prentice et al. 1994).[1] In 1989, NMFS started investigating several 400-kHz PIT-tag interrogation units for monitoring the volitional movement of juvenile and adult salmon as they migrated within streams and into and out of hatcheries. During the studies evaluating adult salmon passage through interrogation units at Minter Creek and Skagit River Washington State Hatcheries, biologists observed that volitionally migrating adults remained within the interrogation units for an average of 2 minutes, but that some fish remained for several hours (Prentice et al. 1994). The potential for long exposure of migrating adult salmon to strong electromagnetic fields (EMFs) within interrogation units caused concern among NMFS personnel.

Studies by others have documented that EMFs in both kHz and GHz ranges can produce negative biological effects under prolonged (months) exposure (see reviews by Aldrich and Easterly 1987, Brown and Chattopadhyay 1988). Regardless of the operating frequency used, even the weakest calculated field strength within a PIT-tag interrogation unit (58 A/m for 5,551 cm^2 passageways) is substantially higher than the 1.6 A/m level permitted under 1982 American National Standards Institute (ANSI) standards for 24-hour exposures to an entire human body by EMFs in the 100-to-400-kHz range.

Unfortunately, no studies have investigated the effects of EMFs in the 100-to-400-kHz range on the biology of animals. Therefore, prudence dictated that NMFS determine if there were any negative impacts on the reproductive success of fish before interrogation units for adult salmon were installed on a wide scale both within and outside of the CRB. NMFS designed two studies to investigate whether there were any biological effects from the types of exposure adult salmon were likely to face. Since adult salmon die after spawning, the concern was more for their offspring and subsequent generations than for the adults physically exposed.

[1] In 1996, the decision was made to base the next PIT-tag interrogation system for the CRB on the 134.2-kHz standard approved by the International Standard Organization. The interrogation units for juvenile salmon will be installed for the Year 2000 outmigration season. Development of interrogation units for adult salmon is on-going.

From 1990 through 1993, NMFS conducted two studies to determine if fish or their offspring were affected by exposures up to 24 hours to 125-kHz or 400-kHz EMFs (Prentice et al. 1994). In the study that exposed chum salmon (*Oncorhynchus keta*) zygotes directly, no significant differences or trends were found in the number of survivors, average fork lengths, or percent deformities between 24-hour exposed and unexposed groups. In the other study, medaka (*Oryzias latipes*) were used as a surrogate species for salmon. Medaka, freshwater killifish, were chosen for their relatively short generational time (4-6 months), ability to reproduce year-round, common use in teratological studies, and being oviparous like salmonids.

In this medaka study, actively breeding fish were exposed to a range of times (1-1400 minutes) under significantly stronger EMFs (4-5 times) than would be present within an interrogation unit for adult salmon. NMFS reasoned that if no impact was documented on reproduction or development over two generations, then we could assume that shorter and weaker exposures would not negatively affect other species (e.g., salmon). However, if any of these exposures affected medaka, then more study would be needed.

In the first-generation medaka offspring, there were differences in larval mortality between the control (20.1%) and EMF-exposed groups (27.3-33.7%). In addition, the control group had fewer deformed hatched larvae (3.0%) than the EMF-exposed groups (5.0-11.5%). Although large, these differences were not significant because statistical power was low with only six replicates completed. However, the results did suggest that EMF exposure may affect the survival and performance of first-generation offspring from EMF-exposed fish.

Since the data from second-generation fish indicated no differences in performance between the offspring from control and exposed fish, a modified experimental design was implemented in 1994 to concentrate on evaluating first-generation offspring performance through the transition to exogenous feeding. It was vital to include this period of transition to exogenous feeding because other research studies have found this transition to be a critical period when "treated" fish have exhibited significantly higher mortalities or abnormalities than untreated controls (e.g., Rand and Petrocelli 1985, Blaxter 1988). This modified experimental design would also permit enough replicates (10) to be accomplished to provide the necessary statistical power for determining whether trends like those listed above are significant or merely due to normal biological variation. The modified experimental design also expanded on the first study to test not only tag-energizing frequency, but also field strength and field orientation. This report covers this second medaka experiment.

If this study indicated there were significant negative effects, then the next step would be to determine if interrogation units for adult salmon could be designed that would reduce the EMF exposure to an acceptable level.

Methods and Materials

In this cooperative study with the University of Washington, actively breeding medaka were exposed to 12 treatments to test tag-energizing frequency, field strength, and field orientation (Table 9). The control was duplicated to give a better estimate of the within-species variation (i.e., normal biological variation for this species). As indicated in Table 9, we used capital letters to designate the 12 treatments.

To conduct this study, fish culture and EMF-exposure laboratories were constructed at the NMFS Manchester Research Station. To induce egg production in medaka, the same temperature (25-27°C) and light conditions (16 hours light and 8 hours dark) were maintained in both laboratories. For exposing the fish, personnel from the NMFS Sand Point Electronics Shop built four exposure units (52-cm long by 25-cm wide by 30-cm high) from Plexiglas. Each had a single coil wrapped around it that consisted of 26 wraps of 18-gauge Litz wire. Three of the exposure units had horizontal coils and one had a vertical coil. One of the horizontal exposure units operated at 400 kHz while the others operated at 125 kHz. Different settings on the power amplifiers were used to produce the two field strengths tested: approximately 50 and 260 A/m at the centers of the exposure units. The applied 10-A, peak-to-peak current was continuous, not pulsed. For the control treatments, no current was applied to an exposure unit.

Since multiple treatments were to be conducted simultaneously in the EMF-exposure laboratory, NMFS contracted Pacific Northwest National Laboratory (PNNL) to take EMF measurements in the laboratories using equipment calibrated in frequency ranges appropriate for the both the ELF (extremely low frequency) and RF fields involved. PNNL's measurements affirmed that the exposure units did not interfere with each other when they were placed 2.4 m apart. Their measurements also confirmed the calculated magnetic field flux density distributions within the exposure units. In addition, they determined that the minimal background (60-300 Hz range) magnetic fields in the two laboratories, as well as those within the electric incubator, would not interfere with the higher RF exposures used in the study.

Medaka were cultured under static water conditions following the methods of Kirchen and West (1976). Broodstock from Japan were used in this study and were purchased through local tropical fish stores. Although Kirchen and West had success rearing medaka year-round, we and other researchers contacted found the fish were primarily dormant during the winter months. We also found broodstock procurement was inconsistent over the entire study because shipments were delayed, and diseases, primarily ick, caused problems. In fact, the last three shipments did not survive the 10-14 day quarantines at the fish store. This helped us in deciding to stop the study before the tenth replicate was fully completed because winter was arriving when the study would be shut down for 3-4 months. Furthermore, the stop decision took into account that the statistical results had been the same since the sixth replicate.

Table 9. Coil orientation, tag-energizing frequencies (kHz), field strengths (A/m) and time exposures (minutes) for the 12 treatments. In addition, the letters used to designate each treatment are presented.

Coil orientation	Frequency (kHz)	Field strength(A/m)	Time exposure (minutes)			
No field Horizontal	400	260	0*	-1	-140	-1,400
Horizontal	125	260	-	1	140	1,400
Vertical	125	260	-	-	-	1,400
Horizontal	125	50	-	1	140	1,400
			Treatment abbreviations			
			A, B	-C	-D	-E
			-	F	G	H
			-	-	-	I
			-	J	K	L

* The control was duplicated (i.e., treatments A&B) to give a better estimate of within-species variation or normal biological variation.

After the broodstock had successfully completed their quarantine at a fish store, the fish were transported to our laboratory. Upon arrival, broodstock were maintained separately for 3-5 days to get the fish acclimatized to the new conditions and to confirm that they were healthy. The individual fish were then sexed to stock the 19-L aquariums with sets of 9 females and 6 males. Typically, 15-20 sets of fish were maintained at a time. The aquariums were kept bare except for a sponge filter. The fish were transferred to clean aquariums 2-3 times/week.

Fish were maintained in an aquarium until at least 3 out of 9 females were brooding on a daily basis before the set was considered ready for exposure. Female medaka produce external clutches of eggs that remain attached to their abdomens for 4-6 hours after fertilization until the adhesive material that binds the eggs together begins to disintegrate. At this time, the females tend to rub the eggs off of themselves. Loose dangling eggs are also eaten by other fish. Thus, eggs attached to females represented only the current day's production and not multiple days' production. This made it possible to collect only eggs that had been produced while the fish were being exposed and the two subsequent days. Larval development is also rapid and easily followed in the clear eggs, which made it easy to confirm the age of the eggs.

Three sets of medaka were exposed at one time. Therefore, when fish from three aquariums were actively breeding, each aquarium was randomly assigned to one of the 12 treatments until that replicate was completed. To perform an exposure, medaka were transported in their aquariums to the EMF-exposure laboratory. There, they were positioned in the centers of the exposure units. To help keep the treatments unknown to the main investigator, programmable timers were connected to the power amplifiers and aquarium labels only included the exposure number (e.g., the first aquarium used in the second replicate would be labeled 13). All of the treatments began at 1100 hours, and each of the 12 treatment groups remained in an exposure unit for 1,400 minutes, regardless of how long the induced EMF was present. The fish were then transported back to the culture room for egg collection.

Clutches of eggs were collected from all breeding females on the morning an aquarium was transported back to the culture room and for the next 2 days. To collect eggs, individual females were netted and eggs gently removed from her abdomen. The number of eggs produced by each female was recorded. On each day, up to 25 eggs from one aquarium were all placed into a single 4-cm-diameter petri dish containing a liquid saline growth medium recommended by Kirchen and West (1976). If > 25 eggs were collected, then two or more dishes were used. On the first day, eggs were also collected from the bottom of the aquarium and maintained in separate petri dishes. Any older eggs (easily identified by egg development) were discarded. This extra step was necessary because eggs were sometimes dislodged during the short drive back from the EMF-exposure laboratory. At the end of the first day, the fish were transferred to clean aquariums.

Eggs collected over the 3 days and the number of breeding females were combined to determine the average number of eggs produced per female for that treatment (the eggs collected from the bottom of the aquariums were omitted from this calculation). On the day the eggs were collected, they were inspected for fertilization. From this information, fertilization rates (number of fertilized eggs/total number of eggs) were calculated for each treatment. After the third day, the adults were sacrificed and measured to the nearest 0.1 mm using a customized measuring slide under a dissecting microscope.

The petri dishes were placed into a 24°C electric incubator and the offspring were examined daily until all had either died or hatched (hatching starts at around Day 14). During these daily examinations, unfertilized eggs, dead eggs, dead larvae (developing and hatched), and grossly deformed hatched larvae that obviously would not survive were counted, removed from petri dishes, and preserved in Bouins solution. If fungus was observed during the daily examinations, then precautionary measures were taken because fungus easily spreads even to healthy eggs. Treatments that had eggs with even slight cases of fungal infestation were separated into new petri dishes; one for the infected eggs and one for the uninfected eggs. However, this approach was not always successful in halting the fungal spread in the supposedly uninfected group. Growth medium in the petri dishes was minimally replaced twice a week (more often when fungus was present).

Hatched larvae that were active and had normal morphologies were immediately transferred to the juvenile-rearing tanks. Inactive hatched larvae were left in the petri dish until they either became active or died. The latter were recorded as deformed hatched larvae, as were active larvae that had curved spines or missing fins (these would die shortly after hatching and so were not transferred). Any eggs that had not hatched by one month following the exposure date were also recorded as deformed hatched larvae (all of these were followed initially, but even if they eventually hatched with normal shaped bodes, they never became active enough to be transferred to a juvenile tank). From these data, larval mortality (number of dead larvae/number of fertilized eggs) and deformity rates among the hatched larvae (number of deformed hatched larvae/total number of hatched larvae) were calculated.

Separate juvenile-rearing tanks were used to house juvenile medaka from each treatment. These rearing tanks were rectangular plastic containers that held 2 L of water. The water was maintained under static conditions (an air stone kept the water circulating) at approximately 24°C and was changed twice a week. The juvenile medaka were fed commercially prepared juvenile fish feed. Juvenile medaka were observed daily and any mortalities were removed and recorded. In addition, when the water was changed, the numbers of juveniles were counted.

Thirty days after half of the eggs in a treatment had hatched, all juveniles in that treatment were sacrificed (this ensured that the last hatching fish had passed through the transition to exogenous feeding). The fish sacrificed were used to yield estimates of

juvenile mortality (number of sacrificed juveniles/number of transferred hatched larvae). In addition, fork lengths of the sacrificed juveniles (a maximum of 30 juveniles/treatment) were measured to the nearest 0.1 mm using a compound microscope attached to a computer running Optimas, an image analysis program.

Broodstock size, egg production/female, fertilization, mortality, length, and deformity data for the 12 treatments were statistically analyzed with one-way ANOVAs. The significance level for all tests was established at $P \leq 0.05$.

Results and Discussion

The 9+ replicates were completed over a 2.5-year period, from May 1994 to October 1996. As indicated above, difficulty in broodstock procurement and inconsistent egg production both prolonged the study and helped lead to the decision to stop the study before the tenth replicate was completed. When the study was stopped, half of the treatments had nine replicates and half of them had ten replicates (Table 10). There was no difference in the size of broodstock among the 12 treatments ($F = 1.087$; $P = 0.386$; Table 10). Most of the fish measured between 27 and 31 mm.

Average egg production ranged from 4.3 to 5.9 eggs/female and was not significantly different among the 12 treatments ($F = 0.355$; $P = 0.970$; Table 10). Treatment K was the only treatment whose average was below 5.0 eggs/female, but all of the treatments had replicates in which its value was less than 3.5 eggs/female. There appears to be a naturally large variation in egg production for this species. For example, in Replicate 4, the averages for Control A and Control B were 4.4 eggs/female and 9.1 eggs/female, respectively (Table 11). Having a large number of treatment cells (18 for the controls compared to 6 in the first study and 93 for the exposed groups compared to 20) helped to confirm the large biological variation displayed by this species by showing that the range within a treatment is as large as between treatments. Such variation in individual female performance is well documented for other species including salmonids (e.g., Refstie and Gjerdem 1975, Blanc and Chevassus 1979). When averaged over 9+ replicates, means for the control groups (5.5 eggs/female) and the EMF-exposed groups (5.4 eggs/treatment) indicated that egg production was basically the same whether the breeding medaka were exposed or not.

There was no significant difference in the percentage of eggs fertilized among the 12 treatments ($F = 0.842$; $P = 0.599$; Table 10). Average fertilization rates for the 12 treatments ranged from 87.9 to 96.0%. Treatment C was the only treatment whose average was below 90.0%. It was low due to two females; one had five out of its seven eggs unfertilized and the other had all eight of its eggs unfertilized. The latter female's eggs were probably removed before a male had a chance to fertilize them. Without these two females, the fertilization percentage for Treatment C would have equaled 92.6%.

Larval mortality rates were not significantly different among the 12 treatment groups (F = 0.872; P = 0.570; Table 12). Averages for treatments in this study (7.2-17.9%) were less than averages in the first NMFS medaka study (20.1-33.7%; Prentice et al. 1994). In the first study, only 1 treatment cell out of 30 had less than 7% larval mortality, while in this study 55 out of 111 treatment cells or roughly 50% had larval mortalities < 7%. This is most likely because the petri dishes were checked 7 days/week instead of only 5 days/week. Therefore, if an egg died, it could be removed immediately, which reduced the opportunity for fungus to infest healthy eggs.

Fungus was present in all of the treatment cells that had > 20% larval mortality in this study. Fungus also appeared to be a factor in groups with high mortality rates in the first medaka study: 24/30 treatment cells had > 20% larval mortality and 22 of those 24 groups had fungus present. Similar to the other categories, there was a wide variation in larval mortality rates within each treatment whether it was a control or an EMF-exposed treatment. For example, for the two control treatments, larval mortality rates ranged from 1.5 to 32.1%. For Treatment I, which had the highest average at 18.1%, larval mortality rates ranged from 0.0 to 36.4%. Overall, average mortalities for control (13.1%) and EMF-exposed (10.8%) groups were similar in this study. Therefore, the worrisome trend observed in the first study was likely due to normal biological variation and some larval culture practices.

Percentages of deformed hatched larvae ranged from 2.2% to 11.2% and were not significantly different among the 12 treatment groups (F = 0.780; P = 0.659; Table 12). Except for Treatment C, whose average was 2.2%, all of the treatments had treatment cells with >12% and thus, there appeared to be a naturally large biological variation for this species. A genetic basis for this large biological variation in the number of deformed hatched larvae is supported by the fact that Replicates 7 and 8, which used the same broodstock, were responsible for 48% of the total deformed larvae observed. Average deformity rates for the control groups (5.9%) and for the EMF-exposed groups (5.2%) were higher than rates for the control group (3.0%) in the first medaka study (Prentice et al. 1994). However, if one compares identical EMF-exposed treatments between the first and second studies, Treatments D, E, and H all yielded 11.5% rates in the first study but only 5.8%, 3.7%, and 3.7% in this second study. Thus, unlike in the first study, there did not appear to be an increase in the percentage of deformed larvae in the EMF-exposed treatments.

Juvenile mortality rates were not significantly different among the 12 treatments (F = 1.082; P = 0.384; Table 12). Averages for juvenile mortality ranged widely, from 9.5% to 29.1%, over the 12 treatments. Similar to the situation with deformed hatched larvae, Replicates 7 and 8 were responsible for a large proportion (44%) of juveniles that died over the juvenile-rearing period. With averages for control fish (16.3%) and EMF-exposed medaka (18.2%) being similar, it appeared that each handled equally well the transition to exogenous feeding that has been found in other research studies to be a critical period when "treated" fish have exhibited significantly higher mortalities or abnormalities than untreated controls (e.g., Rand and Petrocelli 1985, Blaxter 1988).

Table 10. Summary results (averages and standard deviations) for the 12 treatments (see Table 9 for full description of treatments) that exposed actively breeding medaka to different EMF conditions. Eggs were collected over 3 days and cultured to a mid-juvenile stage. Probability values are based on one-way ANOVAs. At the bottom are the averages and standard deviations from combining the two controls and all of the exposed treatments.

Treatment	Number of replicates	Broodstock size		Eggs/female		Percent fertilization	
		Avg	SD	Avg	SD	Avg	SD
A	9	28.0	(2.5)	5.5	(2.2)	92.5	(8.9)
B	9	27.9	(2.6)	5.4	(2.1)	90.1	(15.3)
C	9	28.0	(2.4)	5.9	(2.6)	87.9	(13.3)
D	10	28.1	(2.2)	5.3	(2.4)	95.8	(5.4)
E	10	27.8	(2.0)	5.6	(1.5)	90.7	(7.3)
F	10	27.7	(1.8)	5.3	(3.1)	92.5	(7.8)
G	10	28.0	(2.6)	5.6	(1.4)	93.4	(6.4)
H	9	27.5	(2.1)	5.6	(1.2)	93.4	(7.1)
I	10	27.6	(2.5)	5.4	(1.7)	95.5	(4.0)
J	9	27.9	(1.8)	5.0	(1.3)	92.3	(9.5)
K	9	27.7	(2.2)	4.3	(1.0)	96.0	(4.8)
L	10	28.1	(2.5)	5.7	(1.8)	95.8	(3.9)
P value			0.368		0.970		0.599
Controls	18	28.0	(2.6)	5.5	(2.1)	91.3	(12.2)
Exposed	96	27.8	(2.2)	5.4	(1.9)	93.4	(7.4)

Table 11. The eggs/female averages for all of the treatments for Replicates 4-7 showing the large amount of biological variation that is normal for medaka. Especially note the variation within replicates for the two control treatments (A&B).

Treatment	Replicate 4 Average	Replicate 5 Average	Replicate 6 Average	Replicate 7 Average
A	4.4	7.9	8.9	6.7
B	9.1	7.0	3.0	6.8
C	4.2	10.0	3.8	9.5
D	4.0	4.4	6.4	7.0
E	5.6	6.0	6.0	4.2
F	3.4	3.7	2.8	10.3
G	5.9	5.1	6.5	6.9
H	5.5	7.4	4.3	5.0
I	7.3	4.3	8.1	5.7
J	6.7	2.8	6.0	5.6
K	2.7	4.5	5.3	4.1
L	5.3	7.1	6.4	6.9

Table 12. Summary results (averages and standard deviations) for the 12 treatments (see Table 9 for full description of treatments) that exposed actively breeding medaka to different EMF conditions. Eggs were collected over 3 days and cultured to a mid-juvenile stage. Probability values are based on one-way ANOVAs. At the bottom, are the averages and standard deviations from combining the two controls and all of the exposed treatments.

Treatment	Number of replicates	Larval mortality		Juvenile mortality		Percent deformity		Overall survival		Juvenile length	
		Avg	SD	Avg	SD	Avg	SD	Avg	SD	Avg	SD
A	9	12.5	(9.8)	19.4	(11.3)	5.5	(5.1)	67.2	(14.5)	10.8	(2.1)
B	9	13.7	(10.0)	13.2	(14.7)	6.2	(6.5)	70.4	(16.8)	10.8	(2.0)
C	9	8.5	(5.1)	11.4	(11.0)	2.2	(2.7)	79.3	(11.5)	10.4	(2.0)
D	10	17.9	(17.0)	16.4	(16.9)	5.8	(9.8)	66.8	(26.3)	10.3	(1.4)
E	10	8.7	(6.5)	29.1	(22.4)	3.5	(3.7)	62.8	(20.2)	10.2	(2.0)
F	10	8.5	(9.3)	9.5	(9.0)	5.2	(7.1)	78.7	(14.3)	10.9	(2.2)
G	10	10.9	(21.6)	18.0	(16.9)	11.0	(10.1)	64.6	(22.4)	10.5	(1.3)
H	9	7.2	(5.8)	17.6	(14.8)	3.7	(6.5)	72.2	(16.9)	10.0	(1.3)
I	10	15.6	(12.7)	22.2	(27.9)	4.5	(5.6)	61.3	(25.2)	10.8	(1.9)
J	9	10.7	(6.6)	22.0	(24.1)	7.0	(10.3)	65.9	(24.0)	10.8	(2.3)
K	9	8.6	(11.5)	24.2	(16.9)	4.1	(8.5)	68.8	(23.7)	10.7	(2.1)
L	10	10.5	(12.0)	13.2	(8.6)	5.0	(7.2)	74.8	(18.2)	10.1	(1.1)
P value		0.570		0.384		0.659		0.739		0.990	
Controls	18	13.1	(9.6)	16.3	(13.1)	5.9	(5.7)	68.8	(15.3)	10.8	(2.0)
Exposed	96	10.8	(11.8)	18.2	(17.8)	5.2	(7.5)	69.6	(20.7)	10.5	(1.7)

Averages for fork lengths of preserved juveniles ranged from 10.0 to 10.9 mm and were not significantly different among the 12 treatments (F = 0.268; P = 0.990; Table 12). In the first replicates, some of the groups had smaller juveniles because they had higher numbers of juveniles. This density-dependent growth was eliminated by limiting the number of juveniles in each 2-L tank to 30 individuals. Thus, the lower averages for Treatments E, H, and L had to do with their having higher numbers of juveniles in early replicates, and were not due to these treatments being exposed to EMFs.

Overall survival rates from fertilization to the mid-juvenile stage ranged from 61.3 to 79.3% and were not significantly different among the 12 treatments (F = 0.697; P = 0.739; Table 12). As indicated by the large standard deviations, there was a naturally large variation in overall survival rates within a treatment. For example, Treatment B (a control), survival rates ranged from 47.1 to 90.9% for individual replicates. In Treatment D, which had the highest standard deviation, overall survival rates ranged from 33.3% to 100.0%. This wide variation is not surprising since the overall survival rates take into account most of the stages covered above that had displayed a large amount of natural variation for this species. Averages for the control groups (76.7%) and the EMF-exposed groups (78.5%) were similar, suggesting that EMF-exposure does not affect survival of this species.

Conclusions and Recommendations

There were no significant differences between the control and the EMF-exposed treatments in any category (e.g., egg production/female, fertilization rates, larval mortality rates, deformity rates, overall survival). Duplicating the control treatment was critical for this study as the high standard-deviation values associated with the averages for the controls indicated that there is a large amount of natural biological variation in this species.

At this time, results suggest no negative effects from exposure to tested tag-energizing frequencies, field strengths, or field orientations. Assuming the results are directly transferable, they do not limit the design possibilities for developing adult salmon PIT-tag interrogation systems as long as the adults will not be exposed continuously for longer than 24 hours. Exposures longer than 24 hours might not be a problem, but the effects of this longer exposure would need to be tested if a design resulted in salmon being consistently exposed for >24 hours. Based on these results, NMFS recommends that the fisheries community continue toward its goal of PIT-tag interrogation of adult salmon in fish ladders.

PIT-Tag Retention in Adult Salmon

Introduction

The PIT tag is a reliable tool for identification of juvenile and adult salmon. However, an earlier study showed that up to 40% of female and 20% of male coho salmon that were tagged as juveniles lost their tags during sexual maturation (Prentice et al. 1994). Tag loss was also observed in mature sockeye salmon reared in net-pens. Loss of PIT tags during sexual maturation limits their usefulness in situations where identification of mature adult fish is required (e.g., broodstock programs).

The PIT tag used in the Columbia River Basin is encapsulated in biologically inert glass and therefore it is usually found loose in the peritoneal cavity. PIT-tag manufacturers have found that by coating a tag with parylene or by adding a Teflon tip to the tag, they were able to stop PIT tags from migrating within small mammals. In this study, NMFS investigated whether these tags, as well as acid-etched regular PIT tags, would reduce tag movement and loss within fish. These tags were compared to unmodified or regular PIT tags for tissue response (e.g., encapsulation) and tag loss during sexual maturation. A group of fin-clipped, untagged fish was included as a control for comparing growth and mortality rates between tagged and untagged fish.

Methods and Materials

Experimental details/fish culture--Juvenile coho salmon from Washington Department of Fisheries and Wildlife's Minter Creek Hatchery were transferred to the NMFS Manchester Research Station on 9 May 1995. Tagging was delayed when during the first weeks after transfer dead fish were found partially covered with fungus. Blocks of salt were added twice to the tanks to treat the fish. The fungus problem disappeared after this saline treatment.

The following designations were assigned to five treatment groups established in late June 1995 with 2,396 fish: "Capped" for PIT tags with Teflon tips, "Coated" for tags with parylene coating, "Etched" for tags etched with acid, "Regular" for unmodified tags, and "Clipped" for control fish that had their adipose fins clipped. Each fish was anesthetized with MS-222, tagged or clipped, its fork length measured to the nearest 1.0 mm, and its body weight taken to the nearest 0.1 g. After handling and tagging, fish from the five groups were evenly distributed into two 5.4-m-diameter tanks supplied with Beaver Creek water.

Originally, the experimental design called for the five groups to be subsampled each fall and spring until the last of the salmon reached maturity in late 1997. During each subsample, all fish would have their fork lengths measured for growth, all tag codes would be recorded to have an accurate record of the number of surviving fish in each group, and 100 fish from each group would be sacrificed to examine tissue response and measure body weight. However, when the fish population experienced high mortality

during late July, the first subsample was delayed until spring 1996 (Fig. 9). In the interim, it was decided to use the dead fish collected to examine tissue response.

When all of the dead fish from 1995 had been processed, it was determined that well over half of the test fish were already dead. We also recognized that the dead fish collected did not represent all of the dead fish. After rain storms, which would turn the tank water turbid, highly decayed fish were found that obviously could not be identified. Even with the water clear, dead fish were occasionally lost in the large tanks. With so few fish left, the experimental design was modified to continue to use mortalities to examine tissue response until mature fish could be collected in the fall 1996.

Another problem that surfaced during the winter was the presence of a freshwater copepod, *Lernaea* sp. (common name, anchor worm), on the gills of some fish. The problem become epizootic in the spring when basically any fish examined had some copepods attached to its gills. Since crustaceans are osmoconformers, it was decided to transfer the salmon to saltwater (28 ppt) net-pens in June to eliminate the copepods. Surprisingly, the copepods remained present and even sexually active in the saltwater environment. In fact, they were still present on many of the fish sampled in November 1996.

When the fish were transferred to saltwater on 14 June 1996, they were vaccinated against *Vibrio*. Each fish was also scanned for PIT tags and its fork length measured. This process revealed that unfortunately, only 208 study fish remained. The decision was made to limit our subsamples to mature fish during the falls of 1996 and 1997 in hopes of collecting some preliminary information on the tag retention of the different tag types during sexual maturation. The 1996 fall subsample was taken on 28 November to collect any mature test fish during their final stages of maturation. All fish were measured, but only mature fish were collected; the rest of the fish were left for the 1997 fall sample. Then 2 weeks later during a severe snow storm, river otters got into the net-pens and ate the remaining fish.

Tissue response--Since high mortalities had drastically changed the experimental design, distinctive time periods were established to examine whether tissue response changed over time. During the study, tissue response was examined over the following four periods: 1) 26 June to 31 July 1995, to cover the initial response from tagging; 2) 1 August to 31 December 1995, to cover tissue response during the first fall; 3) 1 January to 14 June 1996, to cover tissue response during the second spring; and 4) a November 1996 subsample to cover tissue response in the first mature fish.

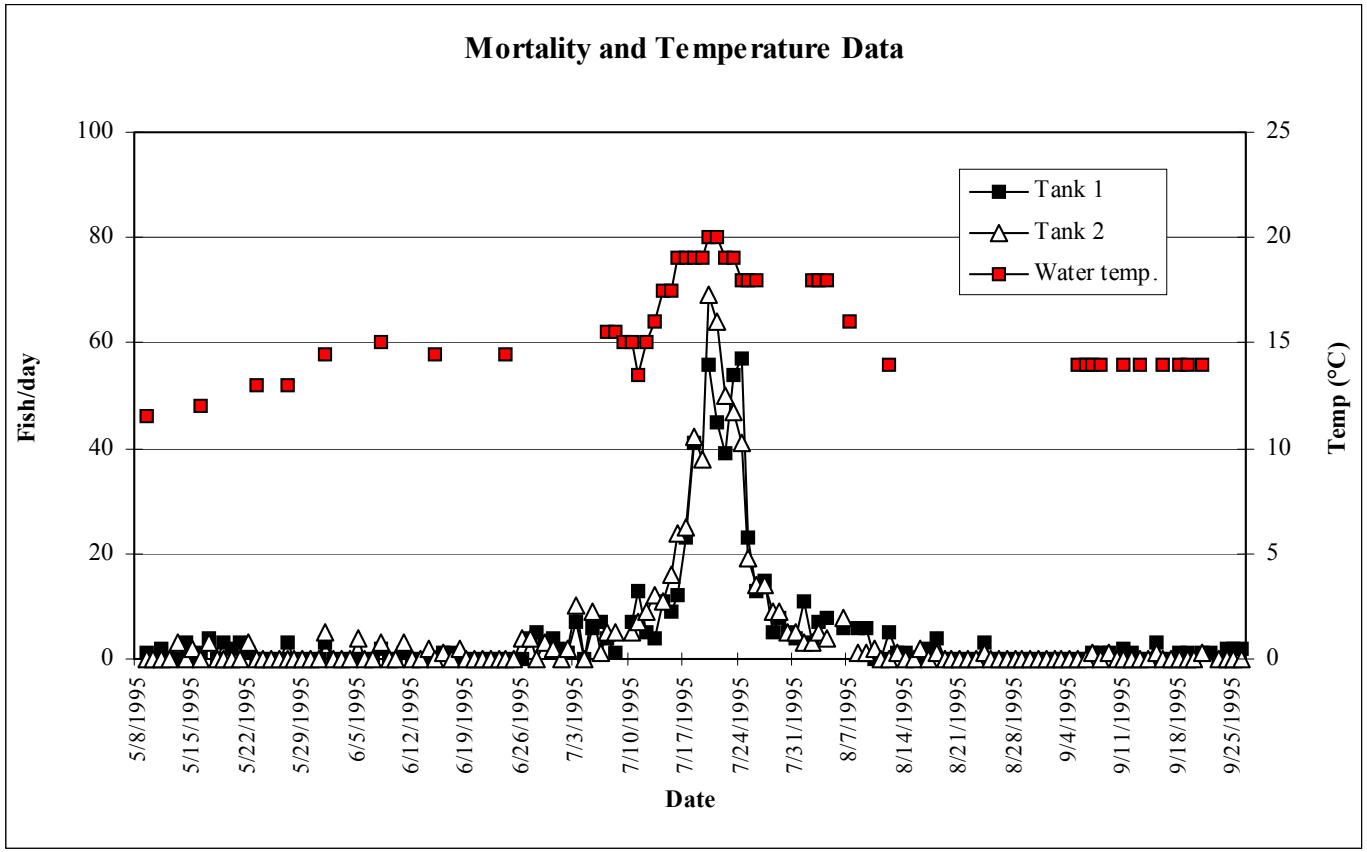

Figure 9. Number of dead coho salmon collected during spring and summer of 1995 and the Beaver Creek water temperatures recorded during the period of high mortality. The dead fish were examined for tissue response to PIT-tag treatments.

Each fish was identified as to treatment group, its fork-length measured to the nearest 1.0 mm, and its weight taken to the nearest 0.1 g. Dead tagged fish were then opened and examined for tissue response to the four tag types. Six host-response and tag-location categories were established: 1) no response, 2) encapsulated in the cecum, 3) surrounded by visceral fat, 4) attached to the intestine, 5) attached to or located inside of the air bladder, and 6) attached to the muscular wall.

If appropriate, multiple categories were used to record tissue response. Some dead fish were too decayed to determine if there had been any tissue response and therefore these were eliminated from the tissue-response analyses.

Statistics--Length and weight data for the five treatment groups were compared using one-way ANOVAs. After adjusting for the different numbers of fish being added to the rearing tanks for each treatment group, chi-square analyses were used to statistically evaluate mortality during the different time periods. Chi-square analyses were also used to evaluate tissue response to the four tag types. Similar numbers of fish were collected during the four sample periods for the different tag types; however, because of the possibility for individual fish to be counted under multiple categories, it was necessary to adjust the numbers so that all of the sample sizes were equal. Significance was established at $P \leq 0.05$ level.

Results and Discussion

Fish culture (growth)--When the coho salmon were tagged, there were no significant differences in lengths ($P = 0.366$) or weights ($P = 0.156$) among the five groups (Table 13). Growth measurements were taken on all dead fish, but since the fall 1995 and spring 1996 samples were spread over months, it was not possible to use these data to compare growth among the tag types. However, length measurements were taken on all remaining fish in June, when the fish were transferred to net-pens, and during the November 1996 subsample. Similar to the tagging data, there were no significant differences in lengths among the five groups in June ($P = 0.993$) or November ($P = 0.972$; Table 14). Therefore, the tagged fish grew at the same rate as the untagged control fish. Furthermore, despite the high mortality experienced during this study, the study fish grew at typical rates for coho salmon.

Fish culture (survival)--Handling and tagging, and then elevated water temperatures (> 18°C) in late July accounted for high numbers of fish being killed in the tanks (see Fig. 9). Even without tagging, handling (i.e., anesthetizing with MS-222, measuring weights and lengths) was stressful to the fish: during the first 2 weeks after tagging, the control group suffered a higher number of mortalities than the tagged groups (Table 15). However, mortality during this 2-week period was not significantly different among the five treatment groups. This mortality occurred before the high water

Table 13. Lengths and weights (averages and standard deviations) of coho salmon tagged or clipped in June 1995. The numbers of fish added to the tanks for each group are also given. P values are derived from one-way ANOVAs.

	Capped	Coated	Etched	Regular	Clipped	*P*
Number	486	432	493	477	508	
Length(mm)						
Average	153.4	153.4	153.6	154.6	153.2	0.366
SD	(11.7)	(9.1)	(9.3)	(15.1)	(14.0)	
Weight(g)						
Average	37.0	36.0	36.3	36.1	36.0	0.156
SD	(8.0)	(7.7)	(8.0)	(8.0)	(7.5)	

Table 14. Fork lengths (averages and standard deviations) for all coho salmon measured on 14 June and 28 November 1996. The numbers of fish remaining on these dates for each group are also given. P values are derived from one-way ANOVAs.

	Capped	Coated	Etched	Regular	Clipped	*P*
June1996						
Number	41	37	42	36	47	
Length(mm)						
Average	312.1	311.7	315.4	312.9	313.7	0.993
SD	(25.3)	(29.4)	(29.3)	(32.6)	(35.3)	
November1996						
Number	28	24	35	19	29	
Length(mm)						
Average	357.7	354.2	360.9	357.7	357.7	0.972
SD	(27.5)	(36.5)	(36.2)	(32.7)	(36.3)	

Table 15. Chi-square analysis of the number of mortalities recorded for the 2-week period following handling and tagging (June 26-July 10). Expected values are adjusted for the different numbers of treatment fish originally added to the tanks (see Table 13).

	Observed	Expected	χ^2
Capped	28	26.9	0.05
Coated	27	30.2	0.34
Etched	31	29.7	0.06
Regular	25	31.6	1.38
Clipped	38	30.7	1.76
Overall	149		3.59*

* The significant $\chi^2_{0.05,4}$ value is 9.49.

temperatures were recorded. Water temperature did not reach 17°C until 14 July and reached 19°C on 16 July (Fig. 9). Water temperatures remained high until early August. During this period of elevated water temperatures, large numbers of fish died in all of the treatment groups (Table 16). Again, there was no significant difference in mortality rates among groups.

An upper lethal temperature for coho salmon cannot be specifically identified because it depends on many factors; however, like other Pacific salmon, coho salmon prefer temperatures below 15°C (Bell 1991). Furthermore, elevated water temperatures have a synergistic effect and thus will be more problematic if other causes of stress are present. In this case, it appears to have been the accumulation of stresses (handling and high water temperatures) to the fish that was responsible for the high number of mortalities observed. We had originally decided to rear these fish on Beaver Creek water because other Minter Creek coho salmon had been successfully held in this water source for 2.5 years without experiencing high mortalities. To emphasize again the synergistic effect of the different stresses, neither this group of older coho salmon nor the salmon left over after tagging for this study suffered high mortality during the period of elevated water temperatures.

Using the processed dead fish, nondifferential mortality continued through 1995 (Table 17). Then using the actual number of survivors present on 28 November 1996, the data demonstrate that whatever had killed the test fish throughout the study, that all of the groups had been similarly affected (Table 18). Comparing the number of survivors and the number of dead fish collected for each group, one finds that approximately 100 fish from each group were not recovered. This represented 20-25% of the study fish.

Tissue response through 31 July 1995--Using the dead fish collected through 31 July 1995, it was possible to determine that consistent tissue response occurred earlier in the Teflon-capped (11 days post-tagging) and parylene-coated (15 days post-tagging) than in the acid-etched or regular PIT-tagged (both 22 days post-tagging) groups. Furthermore, both parylene-coated and Teflon-capped groups had half as many fish as regular and etched groups that showed no tissue response (Table 19). The chi-square analysis was significant for all four groups ($\chi^2 = 38.60$). Subdividing the chi-square analysis separated the four groups into two distinct groups: one combined parylene-coated and Teflon-capped fish, and the other combined acid-etched and regular PIT-tagged fish. With a standardized sample size of 191 fish per group, observed values for the acid-etched (n = 81) and regular PIT tag groups (n = 103.6) indicated that approximately half of the fish tagged in these groups had no immediate tissue response.

In examining the other categories, chi-square analysis showed statistically significant differences in every case (Table 19). In general, the Teflon-capped and parylene-coated fish continued to show more tissue response than the acid-etched and regular fish. Chi-square analysis for tags located in the ceca among the four tagged

groups was significant ($\chi^2 = 12.07$), and subdivision demonstrated that the nonconformity was due primarily to the Teflon-capped fish (Table 19). Similar statistical results were found for Teflon-capped tags found surrounded by the visceral fat. After subdividing the significant chi-square analyses, the parylene-coated fish were shown primarily responsible for the nonconformity observed for tags found attached to or located inside of the air bladder, attached to the intestine, and attached to the muscular wall. Approximately 22% of the dead fish had tissue responses that were recorded under multiple categories.

Tissue response through 31 December 1995--Only the chi-square analysis for no tissue response was significant for dead fish collected during this time period (Table 20). As before, both parylene-coated and Teflon-capped groups had fewer fish than the regular and etched groups showing no tissue response. This was especially true for the Teflon-capped group, which had only 5 of 53 fish sampled showing no response. Approximately 25% of the dead fish had tissue responses that were recorded under multiple categories.

Tissue response through 14 June 1996--All chi-square analyses were insignificant for dead fish collected during this time period (Table 21). Although not significant, the Teflon-capped group again had the fewest number of fish with no tissue response (and therefore the highest number with some tissue response). During this time period, the sample size was standardized at 55 fish per group, with approximately 11% of the dead fish having tissue responses that were recorded under multiple categories.

Tissue response in November 1996 subsample--This time period had the smallest standardized sample size (14 fish/group); however, these were the mature fish that the study was design to examine. Similar to the two earliest time periods, the chi-square analysis was significant for the no tissue response category (Table 22). Also like before, this was primarily because of the high number of regular PIT-tagged fish in this category. Furthermore, the Teflon-capped group again had the fewest number of fish with no tissue response.

There were two mature fish that were not clipped and did not have PIT tags; these probably had lost their tags. One was a male and one was a female. Unfortunately, it was impossible to tell which group they came from. If one were repeating this study, we recommend that study fish be double tagged with a batch tag so that one could at least identify the treatment group on fish that lost their PIT tags. One could use coded-wire tags or photonic tags for this purpose. This would be a better solution than rearing the fish in separate containers.

Although the study ended prematurely, preliminary results do indicate that fish tagged with Teflon-capped PIT tags appear to have more tissue response than those tagged with regular PIT tags. However, we still do not know if this tissue response will

Table 16. Chi-square analysis of the number of mortalities recorded between 15 July and 31 July 1995 when water temperatures were high. The expected values are adjusted for the different numbers of treatment fish originally added to the tanks (see Table 13).

	Observed	Expected	χ^2
Capped	168	179.9	0.79
Coated	146	159.9	1.21
Etched	193	176.6	1.53
Regular	197	188.1	0.42
Clipped	183	182.5	0.00
Overall	887		3.95*

* The significant $\chi^2 2_{0.05,4}$ value is 9.49.

Table 17. Chi-square analysis of the number of mortalities recorded between 1 August and 31 December 1995. The expected values are adjusted for the different numbers of treatment fish originally added to the tanks (see Table 13).

	Observed	Expected	χ^2
Capped	66	57.0	1.42
Coated	61	50.7	2.11
Etched	43	55.9	2.99
Regular	45	59.6	3.57
Clipped	66	57.8	1.16
Overall	281		7.68*

* The significant $\chi^2_{0.05,4}$ value is 9.49.

Table 18. Chi-square analysis of the number of mortalities for the entire study based on actual numbers of fish left on 28 November 1996. The expected values are adjusted for the different numbers of treatment fish added to the tanks (see Table 13).

	Observed	Expected	χ^2
Capped	458	458.6	0.00
Coated	408	407.7	0.00
Etched	458	450.1	0.14
Regular	458	479.4	0.95
Clipped	479	465.2	0.41
Overall	2261		1.50*

* The significant $\chi^2_{0.05,4}$ value is 9.49.

Table 19. Chi-square analysis of the tissue responses for the four tag treatment groups through 31 July 1995. The observed values are adjusted as if all four groups had 191 fish sampled. Asterisks designate significant deviations from the expected number of individuals to have that response.[a]

	Capped	Coated	Etched	Regular	Totals
No response					
Observed	40.6	47.1	81.0	103.6	272.3
Expected	68.1	68.1	68.1	68.1	
χ^2	11.3	6.4	2.4	18.6	38.60*
Cecum					
Observed	18.1	11.2	6.0	4.1	39.4
Expected	9.8	9.8	9.8	9.8	
χ^2	7.0	0.2	1.5	3.4	12.07*
Visceral fat					
Observed	35.2	22.3	25.0	15.2	97.8
Expected	24.4	24.4	24.4	24.4	
χ^2	4.7	0.2	0.0	3.5	8.41*
Intestine					
Observed	59.8	71.9	48.0	40.6	220.3
Expected	55.1	55.1	55.1	55.1	
χ^2	0.4	5.2	0.9	3.8	10.25*
Air bladder					
Observed	55.5	78.1	49.0	40.6	223.3
Expected	55.8	55.8	55.8	55.8	
χ^2	0.0	8.9	0.8	4.1	13.89*
Muscular wall					
Observed	27.7	39.7	20.0	18.3	105.7
Expected	26.4	26.4	26.4	26.4	
χ^2	0.7	6.6	1.6	2.5	10.79*

[a] The significant $\chi^2_{0.05,3}$ value is 7.815.

Table 20. Chi-square analysis of the tissue responses for the four tag treatment groups from 1 August through 31 December 1995. The observed values are adjusted as if all four groups had 53 fish sampled. Asterisks designate significant deviations from the expected number of individuals to have that response.[a]

	Capped	Coated	Etched	Regular	Totals
No response					
Observed	5.0	14.1	25.7	32.1	76.8
Expected	19.2	19.2	19.2	19.2	
χ^2	0.5	1.4	2.2	8.7	22.73*
Cecum					
Observed	6.0	2.2	1.7	0.0	9.9
Expected	2.5	2.5	2.5	2.5	
χ^2	5.0	0.0	0.2	2.5	7.79
Visceral fat					
Observed	20.0	11.9	13.7	12.8	58.4
Expected	14.6	14.6	14.6	14.6	
χ^2	2.0	0.5	0.1	0.2	2.76
Intestine					
Observed	16.0	16.2	10.3	6.4	48.9
Expected	12.2	12.2	12.2	12.2	
χ^2	1.2	1.2	0.3	2.8	5.54
Air bladder					
Observed	18.0	17.3	6.8	9.6	51.8
Expected	12.9	12.9	12.9	12.9	
χ^2	2.0	1.5	2.9	0.8	7.17
Muscular wall					
Observed	4.0	7.6	6.8	3.2	21.6
Expected	5.4	5.4	5.4	5.4	
χ^2	0.4	0.9	0.4	0.9	2.50

[a] The significant $\chi^2_{0.05,3}$ value is 7.815.

Table 21. Chi-square analysis of the tissue responses for the four tag treatment groups from 1 January through 14 June 1996. The observed values are adjusted as if all four groups had 55 fish sampled. Asterisks designate significant deviations from the expected number of individuals to have that response.[a]

	Capped	Coated	Etched	Regular	Totals
No response					
Observed	24.0	33.0	32.2	29.8	119.0
Expected	29.8	29.8	29.8	29.8	
χ^2	1.1	0.4	0.2	0.0	1.67*
Cecum					
Observed	4.0	2.7	0.0	3.4	10.2
Expected	2.5	2.5	2.5	2.5	
χ^2	0.8	0.0	2.6	0.3	3.70
Visceral fat					
Observed	9.0	6.9	11.4	6.9	34.1
Expected	8.5	8.5	8.5	8.5	
χ^2	0.0	0.3	0.9	0.3	1.62
Intestine					
Observed	12.0	12.4	9.5	5.7	39.6
Expected	9.9	9.9	9.9	9.9	
χ^2	0.4	0.6	0.0	1.8	2.84
Air bladder					
Observed	7.0	4.1	3.8	10.3	25.2
Expected	6.3	6.3	6.3	6.3	
χ^2	0.1	0.8	1.0	2.5	4.38
Muscular wall					
Observed	5.0	4.1	3.8	2.3	15.2
Expected	3.8	3.8	3.8	3.8	
χ^2	0.4	0.0	0.0	0.6	1.00

[a] The significant $\chi^2_{0.05,3}$ value is 7.815.

Table 22. Chi-square analysis of the tissue responses for the four tag treatment groups for the November 1996 subsample of mature fish. The observed values are adjusted as if all four groups had 14 fish sampled. Asterisks designate significant deviations from the expected number of individuals to have that response.[a]

	Capped	Coated	Etched	Regular	Totals
No response					
Observed	1.1	1.3	3.0	9.3	14.7
Expected	3.7	3.7	3.7	3.7	
χ^2	1.8	1.6	0.1	8.7	12.26*
Cecum					
Observed	0.0	0.0	0.0	2.3	2.3
Expected	0.6	0.6	0.6	0.6	
χ^2	0.6	0.6	0.6	5.2	7.00
Visceral fat					
Observed	0.0	1.3	0.0	2.3	3.6
Expected	0.9	0.9	0.9	0.9	
χ^2	0.9	0.2	0.9	2.3	4.23
Intestine					
Observed	5.4	3.8	6.0	0.0	15.2
Expected	3.8	3.8	3.8	3.8	
χ^2	0.7	0.0	1.3	3.8	5.73
Air bladder					
Observed	3.2	1.3	0.0	0.0	4.5
Expected	1.1	1.1	1.1	1.1	
χ^2	3.9	0.0	1.1	1.1	6.21
Muscular wall					
Observed	3.2	0.0	3.0	0.0	6.2
Expected	1.6	1.6	1.6	1.6	
χ^2	1.8	1.6	1.3	1.6	6.25

[a] The significant $\chi^2_{0.05,3}$ value is 7.815.

translate into better tag retention during sexual maturation. In addition, preliminary results indicate it would be possible to remove etched PIT tags from the study because their results so closely resembled results for the regular PIT tags.

Conclusions and Recommendations

Growth and survival results were not significantly different among the five treatment groups at any time during the entire study. However, using the dead fish collected through 31 July 1995, it was possible to determine that consistent tissue response occurred earlier in the Teflon-capped (11 days post-tagging) and parylene-coated (15 days post-tagging) than in the acid-etched or regular PIT-tagged (both 22 days post-tagging) groups. Furthermore, both Teflon-capped and parylene-coated fish had half as many fish as etched and regular groups showing no tissue response during this first time period.

In all four of the time periods, the most consistent trend was that the regular PIT-tag group had the highest number of fish with no tissue response and the Teflon-capped group had the highest number with some tissue response. However, we still do not know if this tissue response will translate into better tag retention by the Teflon-capped fish during sexual maturation.

With the CRB recovery plans requiring the development of PIT-tag interrogation systems for adult salmon, NMFS recommends that this experiment be repeated. However, there are a few fish culture changes that NMFS recommends if this experiment were to be repeated. We recommend that the tagging be done in early spring before water temperatures begin to rise. We also recommend that weights be taken on only 10% of the study fish instead of the 100%, because it is necessary to anesthetize fish longer when weights are being taken than if one is only tagging and taking lengths. Finally, we recommend that smaller tanks be used so that it is easier to find the dead fish and that study fish be double tagged with a batch tag so that one could at least identify the treatment group on fish that have lost their PIT tags.

ACTIVITIES AT COLUMBIA RIVER BASIN DAMS

Review of PIT-tag Systems

Fisheries agencies have requested that PIT-tag interrogation systems and general sampling facilities for juvenile salmon be constructed at Ice Harbor, John Day, The Dalles, and Bonneville Dams over the next 5 years (see Fig. 1). In addition, they requested that the juvenile fish bypass/collection facility at Lower Granite Dam be upgraded. The agencies also requested that the new facilities include PIT-tag separation systems. During 1994-1995, NMFS worked with the COE and its contractors in reviewing engineering concept drawings for these facilities. This review led to changes in number and placement of several interrogation units, electrical specifications, and water-flow requirements. NMFS will continue to consult with the COE and its contractors regarding technical matters related to the location and installation of PIT-tag and related systems at the new facilities.

In August 1994, NMFS personnel joined a team of biologists from several fisheries agencies and the COE in reviewing future PIT-tag interrogation and fish separation needs for Lower Granite, Little Goose, Lower Monumental, and McNary Dams (Fig. 1). The team's recommendations were presented to BPA in late 1994. BPA approved the installation of interrogation units for monitoring mortalities at these dams; however, BPA did not support the relocation of existing interrogation units or installation of new interrogation units on the river and barge exits.

Installation of PIT-tag Systems

During 1994, new bypass/collection facilities for juvenile salmon were completed at McNary and Lower Monumental Dams. The basic McNary facility, which included PIT-tag interrogation and slide-gate separation systems, was built by the COE. PSMFC installed the electronic components and cabling for the interrogation and separation systems. Personnel from NMFS acted as advisors to PSMFC staff and assisted them with installation. The McNary facility became operational on schedule, in April 1994.

Construction of the new bypass/collection facility at Lower Monumental Dam, which included its PIT-tag interrogation and separation systems, was scheduled to be completed in early 1993 by the COE. When the facility was not completed on time, NMFS installed a temporary PIT-tag interrogation system in spring 1993. Permanent PIT-tag interrogation and separation systems were installed by NMFS staff with assistance from PSMFC before the 1994 field season.

In 1995, an experimental site at Lower Granite Dam (GRX) was established as a platform for evaluating the new rotational fish diversion gates and the computer program (BYCODE) that controls fish separation. NMFS installed prototype two-way and three-way rotational gates, six dual-coil interrogation units, and all of the necessary electronic and computer equipment. The GRX site operated independently of the main site at Lower Granite Dam (GRJ) and was designed to divert PIT-tagged fish to the river or to a series of three holding tanks.

The rotational gates and BYCODE program were successfully evaluated in 1995 and the GRX site has been used by many researchers since its construction. A similar experimental site (GOX) was established at Little Goose Dam in 1996. At GOX, NMFS installed a two-way rotational gate and a two-way side-to-side gate. They also installed a secondary fish holding tank into the large tank that was already on site. Like GRX, this site operates independent of the main GOJ site and is used by researchers to collect their study fish.

Measurements of Radio-Frequency Emissions

Introduction

Radio frequency emissions from PIT-tag equipment must comply with Federal Communications Commission (FCC) and National Telecommunications and Information Administration (NTIA) regulations for low-power electronics equipment. The FCC and NTIA regulations indicate that with 400-kHz equipment, RF emissions must be below 6 FV/m when measured at 300 m from several locations. Extrapolation, using the inverse distance squared, is permitted if 300 m cannot be directly measured. In 1994, RF emissions were measured at Little Goose, McNary, and Lower Monumental Dams.

Methods and Materials

Each dual-coil interrogation unit was measured independently. The first step was to find locations where measurements could be made that were approximately 300 m from the PIT-tag interrogation unit. The exact distance of the location was then determined using either triangulation or a laser range finder. Emissions were measured using a calibrated spectral analyzer (Hewlett-Packard model 3585A) set at 400 kHz and its harmonic frequencies. The spectral analyzer was connected to a calibrated loop antenna (Antenna Research Associates model BBH-1100/A) that was rotated to determine maximum emission strength.

Results and Discussion

At Little Goose Dam, four dual-coil interrogation units had exceeded the 6 FV/m limit for RF emissions in 1993. Between the 1993 and 1994 seasons, new aluminum shields were fabricated for these units. Originally, in March 1994, two of the interrogation units still did not comply. Upon closer inspection, it was determined the problem was in the dual-exciter boards. Loops on the exciter boards determine the direction the magnetic fields flow through the coils. Normally, the loops are set to make the fields flow in opposite directions, which minimizes the RF emissions. Instead the two failing units had their coils' fields flowing in the same direction, which enhanced the fields and resulted in higher RF emissions. Once the loops were reversed, the two units complied with the regulations.

When measurements were done at McNary Dam, all except one dual-coil interrogation unit exceeded the 6 FV/m limit for RF emissions. When the shields were inspected, it was obvious their seams were not electrically connected (i.e., not welded together). The noncontinuous seams permitted the RF emissions to escape easily from the shields. These shields had been fabricated by a COE contractor and had not been built according to NMFS design specifications. In contrast, all of the measurements were below the 6 FV/m limit at Lower Monumental Dam where the shields were fabricated using NMFS specifications. Based on this finding, all PIT-tag interrogation system shields at McNary Dam were modified by the COE. Therefore, NMFS recommends that all future installation of PIT-tag interrogation systems require shields that meet the NMFS design specifications.

Performance of Fixed-Reference Tags

In 1993, personnel from the NMFS Sand Point Electronics Shop developed a fixed-reference tag to use as a maintenance tool for PIT-tag interrogation systems (Prentice et al. 1994). The fixed-reference tags test the operational status of each excitation/detection coil by simulating the passage of two PIT tags through that particular coil. They are set to activate their two tags every 4 hours, and the transmitted tag codes become part of the permanent PTAGIS computer file. If a tag code is not recorded, this indicates a potential problem in the interrogation system.

This is especially useful when few fish are passing through the bypass/collection facilities. For example, without the fixed-reference tag information, if a PIT-tag code had not been recorded for hours or days, then one would not know whether the coil was defective or no PIT-tagged fish had transited the flume. Thus, the ability to determine the operational status of each coil on a daily basis is important from systems-reliability and data-integrity standpoints.

During February and March 1994, fixed-reference tags were installed on each coil of the interrogation systems at Lower Granite, Little Goose, Lower Monumental, McNary, and Prosser Dams. To maximize the usefulness of the fixed-reference tags, PSMFC personnel developed a computer program to separate fixed-reference tag data from normal PIT-tag data. The computer program generates an observation-summary report for the fixed-reference tag codes based on the previous day's data. In this report, if a tag code was not received during any of its six transmissions, the potentially defective coil was listed for immediate attention. Maintenance personnel from PSMFC then investigated the situation and corrected any problems.

During the 1994 field season, PIT-tag interrogation systems at the dams experienced only a few electronically related problems. In several cases, the fixed-reference tags were critical in alerting maintenance personnel of coil failures that would otherwise have gone undetected. For example, there was a problem at Lower Granite Dam with a coil located in a flume that was inactive at that time. Even in the few cases when active coils failed, because of the fixed-reference tags, they were repaired quickly. These examples demonstrate that this new tool has significantly improved the overall maintenance and trouble-response time.

In 1995, NMFS requested that Destron-Fearing modify the tag codes of the fixed-reference tags so that all started with the common four-letter code, 0B0B. The change enabled fixed-reference tag codes to be easily identified from normal PIT-tag codes in the computer file. This change helped to improve on-site system analysis, because problems were detected immediately without having to wait for the observation-summary report that would be listing yesterday's problems. The fixed-reference tags operated as designed during the 1996 field season. Furthermore, fixed-reference tags have become a critical maintenance tool for PSMFC.

Evaluation of the Separation-by-Code System at Lower Granite Dam

Introduction

During 1992-1994, NMFS developed and evaluated the Separation-by-Code system at the Manchester Research Station. A Separation-by-Code system combines the computer program, BYCODE, with one or more fish diversion gates. The Separation-by-Code system uses the computer program to separate targeted PIT-tagged fish from untargeted tagged and untagged fish based on their individual tag codes. BYCODE sends a signal to a fish diversion gate when it wants a particular fish diverted. By fall 1994, the Separation-by-Code system had successfully passed its tests at Manchester. To start the transfer of this technology from the research and development stage at NMFS to the operations and maintenance environment at PSMFC, it was necessary to evaluate the system at a dam. Therefore, the experimental site at Lower Granite Dam, GRX, was established.

During the spring of 1995, NMFS installed two prototype rotational gates, interrogation units, computers, and all of the related electronic hardware. Then, BYCODE was evaluated for its ability to direct PIT-tagged fish into five pathways, and the rotational gates were evaluated for mechanical performance. To determine how fish behavior and fish density affected gate efficiencies, tests were conducted in April (low fish density) and May (high fish density) using two salmon species.

Methods and Materials

At the first fish diversion gate (two-way rotational) at GRX, fish can either continue to the river or be diverted toward the second diversion gate (Fig. 10). At the second diversion gate (three-way rotational), fish can continue down the center pathway or be diverted left or right. Net-pens for collecting fish were installed at the ends of these three pathways. The collected fish enabled separation efficiencies to be calculated. For each test, separation efficiencies were calculated for these five possible pathways: to the river and to the three-way diversion gate for the two-way gate; and to the center, left, and right directions for the three-way gate.

Spring chinook salmon (*Oncorhynchus tshawytscha*; n = 500) and steelhead (*O. mykiss*; n = 500) were tested in April when only a few juvenile fish were migrating through the dam. Fall chinook salmon (n = 500) and steelhead (n = 500) were tested in May when large numbers of salmon were migrating through Lower Granite Dam. In the computer database for each species, fish were divided equally among the four final destinations (i.e., 125 fish to the river, center net, left net, and right net). This was done by assigning Action codes to individual tag codes within the Tag Database file used by BYCODE.

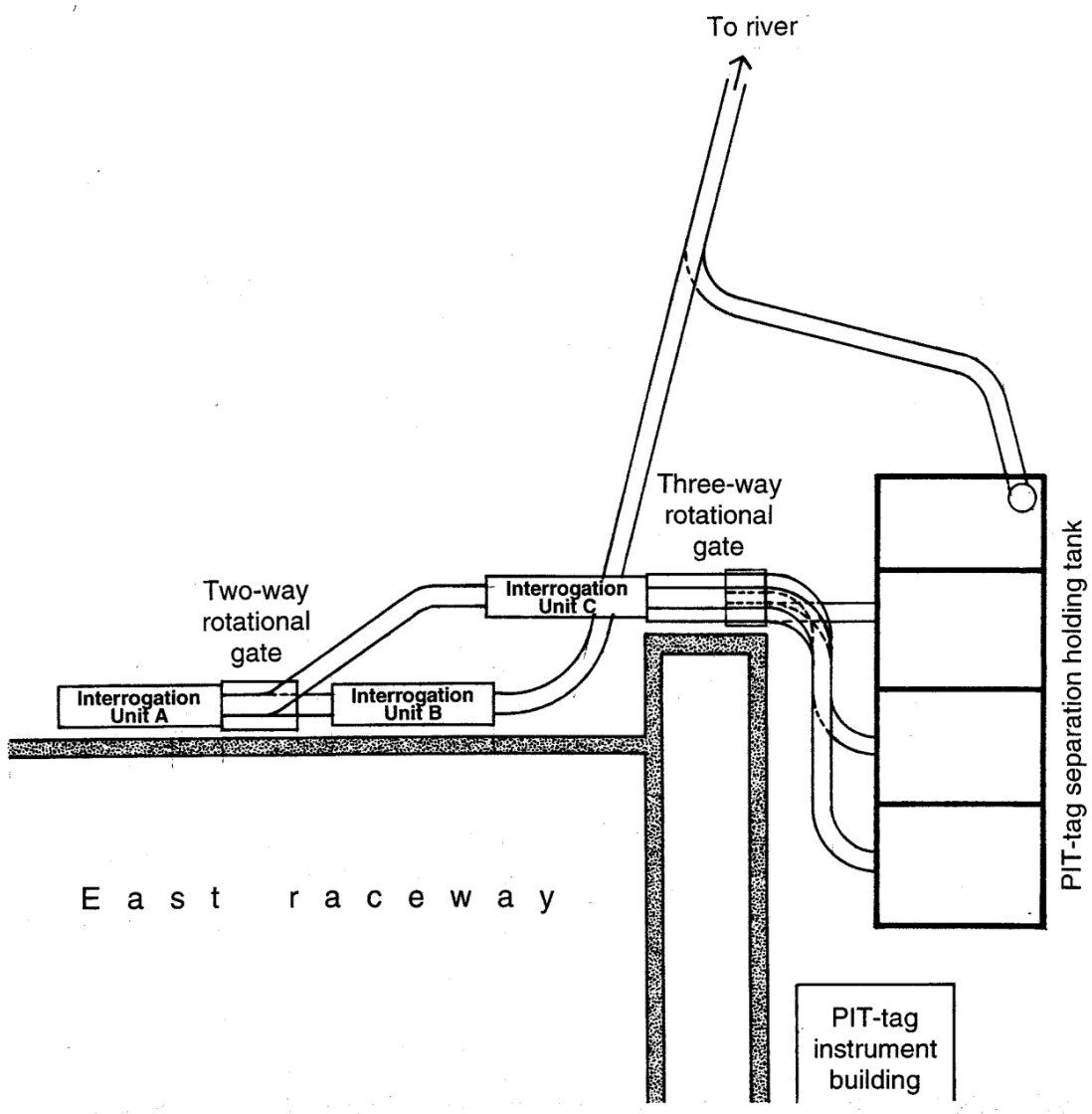

Figure 10. Diagram of the experimental site at Lower Granite Dam (GRX).

Test fish were added to the PIT-tag head tank so they went through GRX with the regular PIT-tagged fish. Non-study PIT-tagged fish had their tag codes recorded by the computer program, but because they were not programmed to be diverted, they should have all gone to the river. However, if they were traveling closely in front of or behind a test fish, they could have been diverted with that test fish.

Results and Discussion

Separation efficiencies for the five pathways for spring and fall chinook salmon ranged from 93.5% to 96.8% and 90.2% to 100%, respectively (Table 23). Although they had similar separation efficiencies, the two run types behaved differently: fall chinook salmon only migrated through GRX between dusk and dawn, while the spring chinook migrated almost immediately after they were added to the PIT-tag head tank.

Unlike chinook salmon, separation efficiencies for steelhead were notably lower for particular pathways. At the two-way gate in April, 94.1% of the steelhead assigned to the three nets were successfully diverted; however, only 73.3% of the steelhead assigned to continue to the river made it to the river. At the three-way gate, 92.3% of the fish assigned to the center net were recovered there, while only 76.8% and 79.9% were successfully diverted left and right, respectively. Steelhead appeared to react (by swimming in the flume) to the hydraulic changes present at the rotational gates.

To counteract the swimming behavior, BYCODE was modified to permit setting different delay and open times for each species at each gate. Opening the gate longer (1200 milliseconds compared to 1000 milliseconds) for steelhead increased separation efficiency for the river-assigned fish from 73.3 to 89.7% (Fig. 11). Unfortunately, because the water velocity was only around 1-1.5 m/second at the three-way gate compared to almost 3 m/second at the two-way gate, there was not a similar increase for the left- and right-assigned fish (i.e., efficiencies remained below 80%). In addition, the flume section immediately preceding the three-way gate has a sharp Z turn in it, which appeared to start the fish responding even before they reached the gate.

In April, only three non-study PIT-tagged fish were recorded, and all went successfully to the river. In May, of the approximate 600 non-study PIT-tagged fish recorded, 30 fish were diverted along with study fish to the three-way gate. No untagged fish were recovered in the nets in April and only nine were recovered in May.

In general, the prototype rotational gates performed satisfactorily. However, it was observed during May that the rotational speed of the gates had slowed down relative to speeds observed in the April tests. Their delay and open settings were adjusted to accommodate the slower gates. The gates had probably slowed down from debris collecting in their mechanisms.

Table 23. Separation efficiencies (%) for the five pathways for spring and fall chinook salmon.

	Spring chinook salmon	Fall chinook salmon
Two-way gate		
To river	93.5	90.5
To three-way gate	96.7	99.3
Three-way gate		
Left	96.6	93.4
Center	96.8	100.0
Right	96.2	90.2

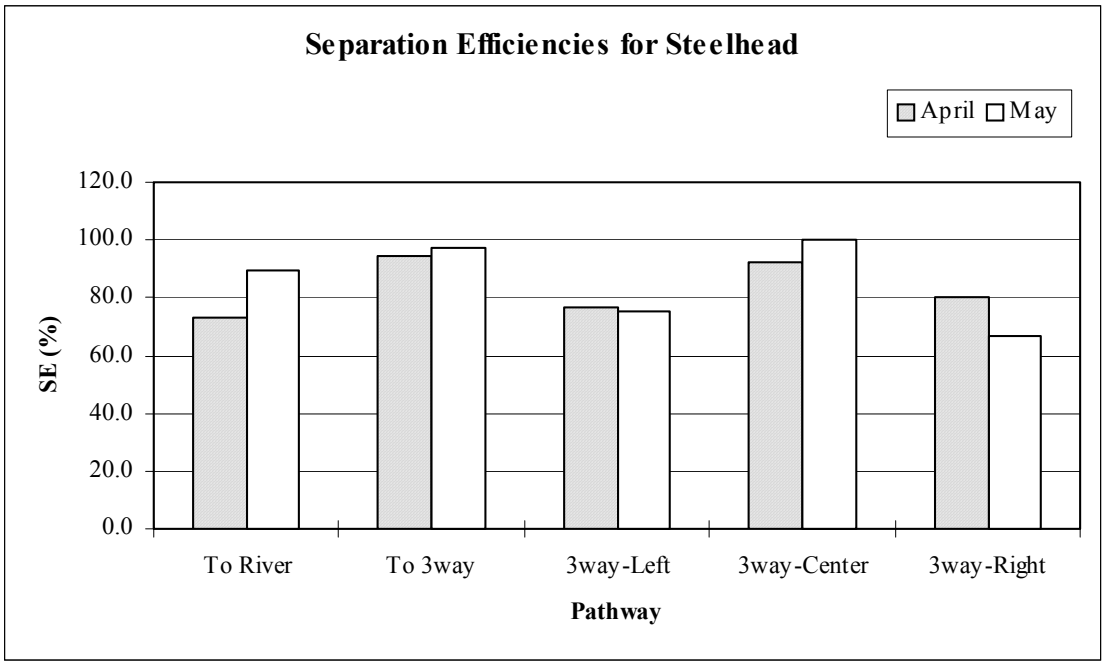

Figure 11. Separation efficiencies for the five different pathways for both the April and May tests for steelhead at Lower Granite Dam. The open times for the gates were 1000 milliseconds in April and 1200 milliseconds in May.

Conclusions and Recommendations

Evaluation of the Separation-by-Code system at GRX was highly successful. For the most part, 90-100% of the targeted fish were successfully routed to their final destinations. The low water velocity at the three-way gate allowed steelhead to avoid being diverted by the gate. Therefore, NMFS recommends that any designs for future bypass systems ensure that water in all flumes associated with fish separation flows at 3-4 m/second.

In general, the prototype rotational gates performed satisfactorily. However, it was observed during May that the rotational speed of the gates had slowed down relative to speeds observed in the April tests. Their delay and open settings were adjusted to accommodate the slower gates. The gates had probably slowed down from debris collecting in their mechanisms.

Due to a short delivery schedule, there were several areas where deficiencies in BYCODE were permitted in order to meet the basic goal of installation and testing at Lower Granite Dam in spring 1995. We recommend that these deficiencies (e.g., a procedure for automatically switching to the backup computer when the primary computer fails) be completed before the system is transferred to PSMFC. An updated version of the computer program was used by four research projects during 1996 at Lower Granite Dam. These projects, along with the research projects at GOX, suggested a few more modifications that would improve the program. These changes will be completed before the 1997 season and thus will be included in the version PSMFC plans to use at most of its sites in 1997.

ACKNOWLEDGMENTS

Support for this research came from the region's electrical rate payers through the Bonneville Power Administration. We are grateful to Rex Baxter, Tim Wick, Bill Spergion, and Brad Eby of the Walla Walla District of the U.S. Army Corps of Engineers and their crews, and to Pacific States Marine Fisheries Commission staff, without whose assistance some field work could not have been conducted.

In addition, we would like to express our appreciation to personnel of the NMFS Pasco and Seattle Mechanic Shops, and the technicians of the NMFS Electronics Shop.

REFERENCES

Aldrich, T. E., and C. E. Easterly. 1987. Electromagnetic fields and public health. Environ. Health Perspect. 75:159-171.

Bell, M. C. 1991. Fisheries handbook of engineering requirements and biological criteria. U.S. Army Corps of Engineers, Portland.

Blanc, J. M., and B. Chevassus. 1979. Interspecific hybridization of salmonid fish. I. Hatching and survival up to the 15th day after hatching in F1 generation hybrids. Aquaculture 18:21-34.

Blaxter, J. H. S. 1988. Pattern and variety in development. *In* W.S. Hoar and D.J. Randall (editors), Fish Physiology, vol. XIA, p. 1-58. Academic Press, New York.

Brown, H. D., and W. Chattopadhyay. 1988. Electromagnetic-field exposure and cancer. Cancer Biochem. Biophys. 9:295-342.

Kirchen, R. V., and W. R. West. 1976. The Japanese Medaka, Its Care and Development. 36 p. (Available from Carolina Biological Supply Co., Burlington, NC, 27215.)

Matthews, G. M., J. R. Harmon, S. Achord, O. W. Johnson, and L. A. Kubin. 1990. Evaluation of transportation of juvenile salmonids and related research on the Columbia and Snake Rivers, 1989. Report to U.S. Army Corps of Engineers, Contract DACW68-84-H0034, 59 p. + Appendices. (Available from Northwest Fisheries Science Center, 2725 Montlake Blvd. E., Seattle, WA 98112-2097.)

Prentice, E. F., T. A. Flagg, C. S. McCutcheon, and D. Brastow. 1990a. PIT-tag monitoring systems for hydroelectric dams and fish hatcheries. Am. Fish. Soc. Symp. 7:323-334.

Prentice, E. F., T. A. Flagg, C. S. McCutcheon, D. Brastow, and D. Cross. 1990b. Equipment, methods, and an automated data-entry station for PIT tagging. Am. Fish. Soc. Symp. 7:335-340.

Prentice, E. F., D. J. Maynard, P. Sparks-McConky, C. S. McCutcheon, D. Neff, W. Steffens, F. W. Waknitz, A. L. Jenson, L. C. Stuehrenberg, S. L. Downing, B. P. Sandford, and T. W. Newcomb. 1993. A study to determine the biological feasibility of a new fish tagging system (1989). Report to Bonneville Power Administration, Contract DE-AI79-84BP11982, 131 p. + Appendices. (Available from Northwest Fisheries Science Center, 2725 Montlake Blvd. E., Seattle, WA 98112-2097.)

Prentice, E. F., D. J. Maynard, S. L. Downing, D. A. Frost, M. S. Kellett, D. A. Bruland, P. Sparks-McConkey, F. W. Waknitz, R. N. Iwamoto, K. McIntyre and N. Paasch. 1994. A study to determine the biological feasibility of a fish tagging system 1990-1993. Report to Bonneville Power Administration, Contract DE-AI79-83BP11982, 209 p. + Appendices. (Available from Northwest Fisheries Science Center, 2725 Montlake Blvd. E., Seattle, WA 98112-2097.)

Rand, G. M., and S. R. Petrocelli. 1985. Fundamentals of Aquatic Toxicology. Hemisphere Publishing Corp. and McGraw-Hill International Book Company, New York.

Refstie, T., and T. Gjerdem. 1975. Hybrids between salmonid species. Hatchability and growth rate in the freshwater period. Aquaculture 6:333-342.