New Concepts in Fish Ladder Design, Volume I of IV

Summary

Final Report
1982 - 1984

DOE/BP-36523-2

August 1985

This Document should be cited as follows:

Orsborn, John, "New Concepts in Fish Ladder Design, Volume I of IV; Summary", 1982-1984 Final Report, Project No. 198201400, 81 electronic pages, (BPA Report DOE/BP-36523-2)

Bonneville Power Administration
P.O. Box 3621
Portland, OR 97208

This report was funded by the Bonneville Power Administration (BPA), U.S. Department of Energy, as part of BPA's program to protect, mitigate, and enhance fish and wildlife affected by the development and operation of hydroelectric facilities on the Columbia River and its tributaries. The views in this report are the author's and do not necessarily represent the views of BPA.

NEW CONCEPTS IN FISH LADDER DESIGN

Final Project Report
Part 1 of 4

Summary Report

Prepared by

John F. Osborn

Washington State University
Department of Civil and Environmental Engineering

Prepared for

Thomas Vogel, Project Manager
U.S. Department of Energy
Bonneville Power Administration
Division of Fish and Wildlife
P.O. Box 3621
Portland, OR 97208-3621

Project No. 82-14
Contract Number DE-AI79-82BP36523

August, 1985

TABLE OF CONTENTS

Part I

	Page
LIST OF TABLES	iii
LIST OF ILLUSTRATIONS	v
SUMMARY OF RESEARCH PROJECT REPORTS	vii
ACKNOWLEDGMENTS	ix
ABSTRACT	xi
GLOSSARY OF FISHWAY TERMS	xiii
INTRODUCTION	1
PROJECT SYNTHESIS	2
PROJECT PHILOSOPHY	5
SUMMARIES OF PROJECT COMPONENTS	8
NEW CONCEPTS IN FISHWAY DESIGN	8
Introduction	8
Basis of the New Weir and Pool Design	9
Fisheries Considerations	10
Conclusions	12
Suggestions for Further Study	13
FISHWAYS--AN ASSESSMENT OF THEIR DEVELOPMENT AND DESIGN	20
Historical Development of Fishways and the Evolution of Design Concepts	20
Classification of Fishways	25
Capabilities of Fish and Controlling Conditions	30
Locomotion and Hydrodynamics	30
A Conceptual, Analytical Model of the Energy Requirements of Ascending Fish	30
Attraction Velocity at Fishway Entrances	36
The Roles of Stimulus, Response, and Stress in the Design of Fish Passage Structures	41
Design Survey	43
Construction Considerations	43
Appendix I--Bibliography	44
Appendix II	44

Page

ANALYSIS OF BARRIERS TO UPSTREAM MIGRATION 45

Introduction 45
Types of Barriers 45
Geometric and Hydraulic Conditions and Similarities of Barriers . 47
Summary of Classification of Barriers 49
Analysis of Fish Capabilities 51
A New Chute and Pool Fishway Development 55
Conclusions from the Barrier Analysis Study 55
Suggestions for Further Study of Barriers 57

REFERENCES 59

LIST OF TABLES

Table		Page
1.	Oriqinal 1982-1983	4
2.	Revised 1983-1984.	4
3.	Factors Which Influence the Swimminq and Leapinq Capabilities of Fish	11
4.	Classification of Fishways--1	26
5.	Classification of Fishways--2	26
6.	Fish Passage	27
7.	Fishway Design Criteria	27
a.	Accepted Desiqn Factors Applied to Pool, Weir and Port Fish Ladders	28
9.	Factors Which Influence the Swimminq and Leaping Capabilities of Fish	31
10.	Nominal Upper Limits of Sustained, Prolonged, and Burst Speeds of Adult Fish	33
11.	Some Historical Highlights of the Study of Fish Locomotion from 600 B.C.--1971 (after Webb, 1975)	34
12.	Summary of Equations Used in the Analysis of Fish and Velocity Relationships	35
13.	Summary--Enerqy Requirements of a Four-Pound Ascendinq Fish.	37
14.	Leap Heiqhts from a Still Pool Calculated from Burst Velocities for Several Species of Salmonids	38
15.	Data Reduction and Velocity Combinations for Analyzinq the Selection of the Higher Velocity Channel by Silver and Chinook Salmon and Steelhead Trout Using the Momentum Difference Between Two Attraction Flows and Their Averaqe Momentum	39
16.	Structural and Environmental Passage Conditions	42
17.	Characteristics of Barrier Classification Components	50

Table | Page

18. Fish Speeds of Average Size Adult Salmon and Steelhead Trout as Reported by Bell (1984) 52

19. Coefficient of Fish Condition (C_{fc}) 54

20. Conclusions About New Chute and Pool Fishway 56

LIST OF ILLUSTRATIONS

Fiqure		Page
1.	General nomenclature sketch for fishway site	xiv
2.	Typical fish ladders	xv
3.	Rouqhened channel fishways	xvi
4.	Recommended geometry for new weir and pool fishladder.	14
5a.	Initial "Waterfall Weir" tests at Johns Creek Fishway, October, 1983, near Shelton, WA.	15
5b.	Semicircular weir flowinq about 3 cfs without baffles	15
5c.	Female chum swimming up jet with drop of 1.1 ft.	16
5d.	Male chum leapinq I.8 ft. with no baffles	16
5e.	Small coho leapinq 2.1 ft.	16
5f.	Male chum leapinq 2.1 ft. with same conditions as Fiq. 5e . .	16
5q.	Weir tests with modified baffles to weir wall, and no baffle .	17
5h.	Low perforated baffles, flared weirs tipped upstream 20" . . .	17
5i.	Low-perforated and hiqh-slotted baffles	18
5j.	Chute and pool fishway with rouqhness strips only on floor . .	18
5k.	Small coho leaping 2 ft. with slotted baffles-quide walls . .	19
5m.	Large coho leaping 3 ft. with low perforated baffles	19
6.	A Schematic of the Full Weir Type Fishway	21
7.	Side view of the oriqinal chute-type fishway designed by Denil	22
a.	Oblique view of a commonly used variation of the Denil fishway concept	22
9.	Schematic of a vertical slot fishway	24
10.	Nomenclature for Table 8	29

Figure | Page

11. Velocity relationships in life phases of a fish 32

12. Choice of hiqher velocities by upstream migrating salmon and steelhead related to momentum level in the attraction flows as defined by the momentum difference divided by the average momentum in the two jets 40

13. Flow chart for analysis of barriers 46

14. Leapinq Curves for Steelhead and Salmon 53

15. Eldorado Creek waterfall superimposed on steelhead leaping curves 54

SUMMARY OF RESEARCH PROJECT REPORTS

Bonneville Power Administration
BPA Fisheries Project 82-14

DEVELOPMENT OF NEW CONCEPTS IN FISH LADDER DESIGN

Conducted at the
Albrook Hydraulics Laboratory
Department of Civil and Environmental Engineerinq
Washington State University
Pullman, Washington 99164-3001

Project Period: June, 1982-October, 1984

1. Orsborn, John F. 1985. SUMMARY REPORT

A synopsis of the project components was prepared to provide an overview for persons who are not fisheries scientists or engineers. This short report can be used also by technical persons who are interested in the scope of the project, and as a summary of the three main reports. The contents includes an historical perspective on fishway design which provides the basis for this project. The major project accomplishments and significant additions to the body of knowledge about the analysis and design of fishways are discussed. In the next section the research project organization, objectives and components are presented to familiarize the reader with the scope of this project.

The summary report concludes with recommendations for assisting in the enhancement and restoration of fisheries resources from the perspective of fish passage problems and their solution. Promising research topics are included.

2. Aaserude, Robert G. and John F. Orsborn. 1985. NEW CONCEPTS IN FISHLADDER DESIGN.--Results of Laboratory and Field Research on New Concepts in Weir and Pool Fishways. (With contributions by Diane Hilliard and Valerie Monsey).

The drivinq force behind this project, and the nucleus from which other project components evolved, was the desire to utilize fish leaping capabilities more efficiently in fishway desiqn. This report focuses on the elements which were central to testing the premise that significant improvements could be made in water use, costs and fish passage efficiencies by developing a new weir and pool fishway. These elements include: historical review of available information; optimization of weir geometry; fluid jet mechanics; air entrainment; enerqy dissipation in the pool chamber; and fish capabilities. The new weir and pool chambers were tested in the field with coho and chum salmon.

3. Orsborn, John F. and Patrick D. Powers. 1985. FISHWAYS--AN ASSESSMENT OF THEIR DEVELOPMENT AND DESIGN. (With contributions by Thomas W. Bumstead, Sharon A. Klinger, and Walter C. Mih.)

This volume covers the broad, though relatively short, historical basis for this project. The historical developments of certain design features, criteria and research activities are traced. Current design practices are summarized based on the results of an international survey and interviews with agency personnel and consultants. The fluid mechanics and hydraulics of fishway systems are discussed.

Fishways (or fishpasses) can be classified in two ways: (1) on the basis of the method of water control (chutes, steps [ladders], or slots); and (2) on the basis of the degree and type of water control. This degree of control ranges from a natural waterfall to a totally artificial environment at a hatchery. Systematic procedures for analyzing fishways based on their configuration, species, and hydraulics are presented. Discussions of fish capabilities, energy expenditure, attraction flow, stress and other factors are included.

4. Powers, Patrick D. and John F. Orsborn. 1985. ANALYSIS OF BARRIERS TO UPSTREAM MIGRATION.--An Investigation into the Physical and Biological Conditions Affecting Fish Passage Success at Culverts and Waterfalls.

Fish passage problems at natural barriers (waterfalls) and artificial barriers (culverts) are caused by excessive velocity and/or excessive height. By determining which geometric or hydraulic condition exceeds the capabilities of the fish, the most promising correction can be made to the barrier.

No waterfall classification system was found in the literature which could be applied to fish passage problems. Therefore a classification system was designed which describes: (1) downstream approach conditions at the base of the barrier; (2) central passage conditions as in a high velocity chute or the leap over a falls; and (3) upstream conditions where the fish exits the high velocity chute or lands after leaping past a barrier.

The primary objective was to lay the foundation for the analysis and correction of physical barriers to upstream migration, with fishways being one of the alternative solutions. Although many passage improvement projects are economically small compared with those at large dams, each year millions of dollars are spent on solving these smaller passage problems--and sometimes the money is wasted due to poor problem definition. This report will assist in both the definition of the problem and selection of the most beneficial solution.

ACKNOWLEDGMENTS

(BPA Fisheries Project 82-14)

The financial support for this project was provided by the Bonneville Power Administration, Portland, Oregon. The project was initiated prior to the time that the Fish and Wildlife Proqram of the Northwest Power Planning Council was developed and initiated. The results of this project have already found, and will continue to find, many opportunities for application to the problems addressed in the NPPC Fish and Wildlife Proqram for the Columbia River Basin.

We wish to express our aratitude to numerous active and retired agency personnel and consultants who responded to our desiqn questionnaire and participated in personal interviews. The names and addresses of many are listed in other parts of this report, but those who were especially helpful include:

F. J. Andrew - International Pacific Salmon Fisheries Commission
Douq Arndt - NPD, USCE
Bill M. Bakke, Director, Trout and Salmon Resource Center
Ken Bates - WDOF
Milo Bell - Consultant
Ted Bjornn - Idaho Cooperative Fishery Unit
Roqer Boqden - WDOG
Bert Carneqie - ODFW
Wayne Daley - KCM
Brian Dane - Canadian Fisheries and Marine Service
Mike Dell - Grant Co. PUD
Ivan Donaldson - Retired
Edward Donahue - Fish Pro Consultants
Ray Finniaan - Canadian Fisheries and Marine Service
M. Fretwell - International Pacific Salmon Fisheries Commission
Jim Haas - DDFW
Thomas M. Humes - Consultinq Western, Ltd., Cranbrook, B.C.
John Hutchins - Anderson, Bjornstad, Kane and Jacobs
Chris Kelloaq - Corrosion Controllers, Inc.
Christine Moffitt - Idaho Cooperative Fishery Unit
Bob Pearce - NMFS
Jim Riis - South Dakota Dept. of Game, Fish and Parks
Charles Ritzi - Consultant, Winthrop, Maine
Emil Slatick - NMFS
Hush Smith - Retired
Gerry Taylor - B.C. Ministry of the Environment
Clark Thompson - Retired
Chuck Waqner - Retired
Dick Weaver - Retired
Russ Webb - WDOF

Our special acknowledgement of helpful cooperation goes to the Washington Department of Fisheries for the use of its hatcheries for field testing of our new fishway designs In particular we wish to thank Dennis Popochock for use of the Johns Creek facility.

The advice, guidance, criticism and support of our BPA contracting officer's representative, Thomas S. Vogel, were extremely important to the success of this project. His sugqestions at critical points were very beneficial.

The project personnel were:

Robert G. Aaserude
Robin Bayley
Thomas W. Bumstead
Kathy Cox
Diane Hilliard
Peter Hines
C. J. Khisty
Sharon A. Klinger
Ann E. Martinson
Walter C. Mih
(Co-Principal Investiqator)
Valerie Monsey
B. J. Naik
John F. Orsborn
(Principal Investigator)
Patrick D. Powers

ABSTRACT

This summary report on BPA Project 82-14, Development of New Concepts in Fishladder Design, has been prepared for use by persons who may not be interested in many of the technical details of the other three parts of the total project report. A Short Glossary of Fishway Terms introduces the reader to some of the more commonly used terminology.

A look at the most active periods of fishway research since 1938 leads into the Columbia River fisheries research program and its unique features. This is followed by a section on how this project developed to achieve two objectives: (1) apply more fundamental tluid and bio-mechanics to fishway design; and (2) work towards developing more cost eftective fish passage facilities with primary application to small scale hydropower facilities.

Our project philosophy was two pronged:

(1) test some of the long-standing design criteria tc determine whether they have appropriate factors of safety; and

(2) test some design mores to determine whether they are physically or biologically correct, and quantify them through measurement and/or analysis.

Iopics from the other three project reports which are highlighted in this Summary, include:

1. The detailed development of the new weir and pool fishway with:
   - (a) the tests and analytical evaluations which were conducted;
   - (b) the conclusions and research recommendations on the weir and pool fishway:
2. An assessment of the historical development of fishways and their design covering such topics as:
   - (a) early European and United States efforts at fishway development;
   - (b) classification systems for comparing different types of fishways;
   - (c) the swimming and leaping capabilities of salmonids, and factors which affect those capabilities;
   - (d) a discussion of the locomotion of salmon-ids and the hydrodynamics of that motion;
   - (e) a comparative analysis of the energy expenditure of fish in passing through fishways while swimming through ports, or up chutes, or leaping;
   - (f) a fluid mechanics basis for why fish responded to certain attraction velocity conditions;
   - (g) a discussion of important stresses, stimuli and responses which fish can experience in a fishway;
   - (h) the results of an international survey of current fishway design practice;
   - (ij construction considerations for smaller fishways including alternative materials;

(j) a bibliography with extra references on fishway-associated factors which may not be readily available to other researchers; and

(k) a summary of the research and design developments which led to field testing of the new weir and pool fishway.

3. The last volume of the project report presents an organized approach to the evaluation and correction ot two major barriers to upstream migration, waterfalls and culverts. The classification system uses site geometry, hydrology and channel hydraulics, blended with fish species requirements, to define the problem. The solution is developed by matching the modifications to fish capabilities.

SHORT GLOSSARY OF FISHWAY TERMS

(Use with Figs. 1, 2 and 3)

ALASKA STEEPPASS: a type of Denil fishway developed for use in remote areas of Alaska; prefabricated of metal in sections which can be connected on site; has vanes on floor and sides to reduce velocity; high air content in flow.

ATTRACTION FLOW: flow exiting the downstream end of the fishway; the fishway flow is sometimes augmented by the auxiliary flow to form a larger attraction flow; auxiliary flow is usually needed where there are competing flows which could attract fish from the fishway entrance, such as from powerhouses, spillways or waterfalls.

BAFFLE: any protrusion on the floor and/or walls of a chute or channel used to create an energy loss (velocity reduction) in the flow; large baffles provide a wake behind the baffle where fish can rest; in hydraulic engineering a baffle is any device which is used to dissipate (baffle) kinetic energy (caused by velocity).

BARRIERS: to upstream migration; physical and chemical; natural and artificial; debris and log jams; chutes, falls, culverts, temperature; chemical.

DENIL: a fishway chute with roughness elements (baftles, vanes) on the sides and floor which cause the average velocity to be reduced; much air is entrained which reduces the attractiveness of the flow at the downstream end of the fishway; usually constructed as a connecting fishway between resting pools, a chute and pool fishway.

FISH LADDER: a type of fishway consisting of a series of steps (like a ladder) or drops for dissipating water energy in expansion eddies in pools.

FISH PASS: term for fishway; more commonly used in Europe.

FISH SPEEDS: (or velocity) defined in three ranges: sustained, prolonged and burst (formerly called cruising, sustained and dart or burst) speeds; fish can swim sustained indefinitely without tiring; prolonged speeds are for 20 sec. to 200 min. but fish will become exhausted; and burst speeds can be maintained for 5-20 secs. and result in exhaustion. Burst speeds are used for leaping. Speeds are a function of fish size, species, condition, life phase and water quality. A steelhead maximum burst speed is about 28.0 ft/sec (fps).

FISHWAY: general term for any flow passage which fish negotiate by swimming and/or leaping; can be a high velocity chute, a cascade or vertical waterfall in nature; can be a man-made (artificial) structure such as

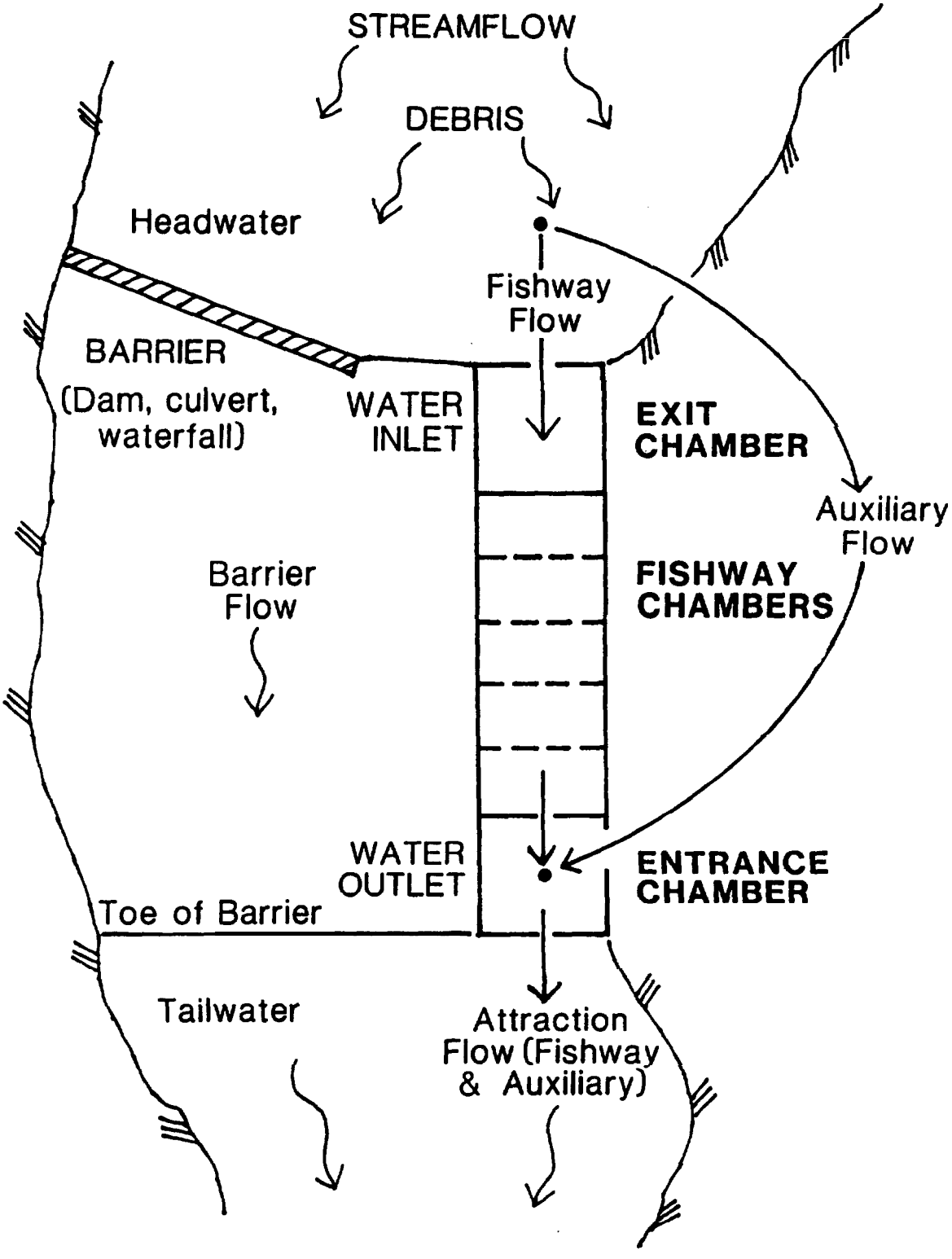

Fig. 1. General Nomenclature Sketch for Fishway Site.

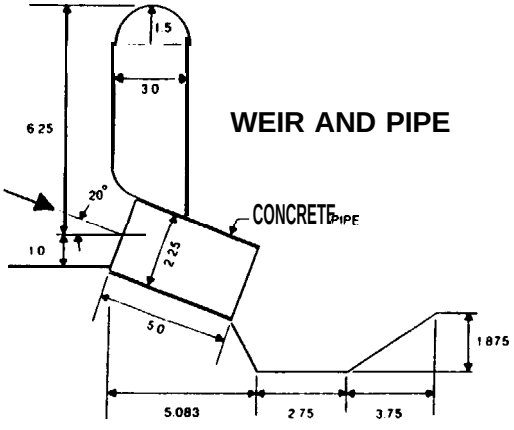

PROFILE

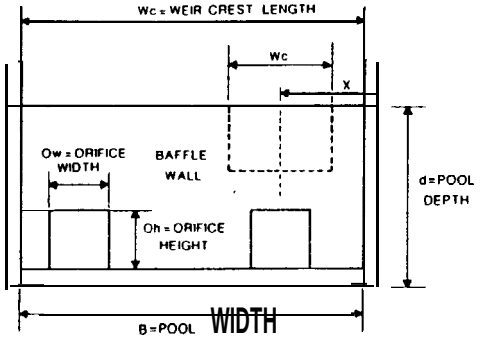

CROSS SECTION

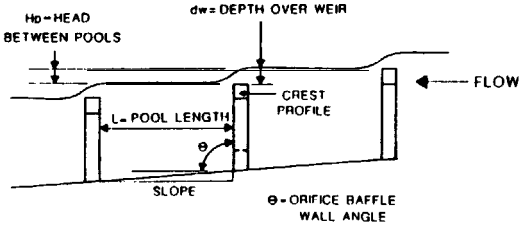

PROFILE

WEIR AND ORIFICE

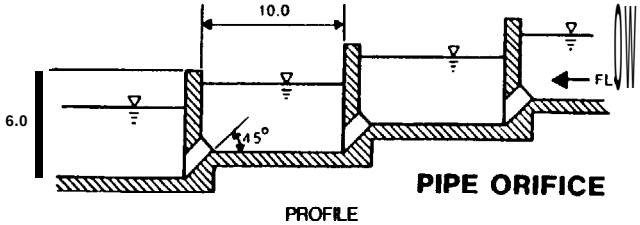

PIPE ORIFICE

PROFILE

DIMENSIONS IN FEET

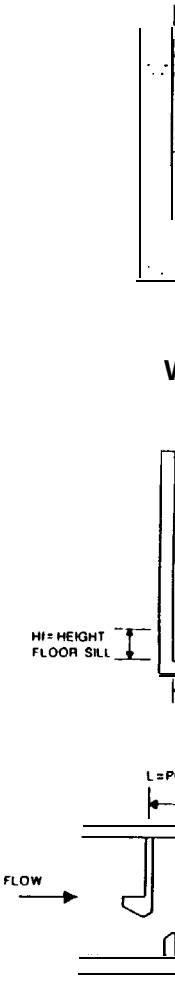

SLOTTED POO

FIG. 2. TYPICAL FISH LADDERS

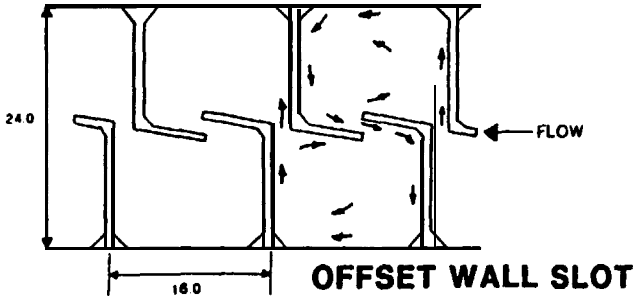

OFFSET WALL SLOT

TYPE E • PLAN

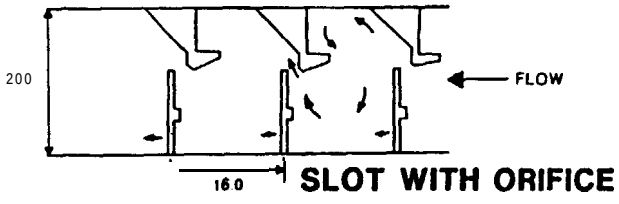

SLOT WITH ORIFICE

TYPEC-PLAN

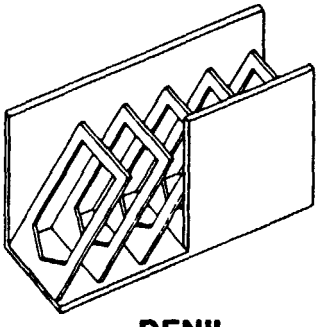

DENIL

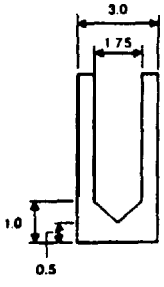

CROSS SECTION

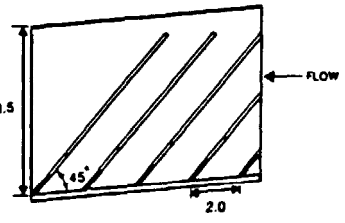

PROFILE

CU

DIMENSIONS IN FEET UNLESS MARKED INCHES

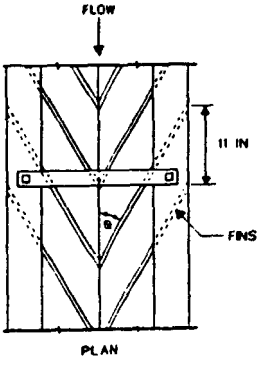

PLAN

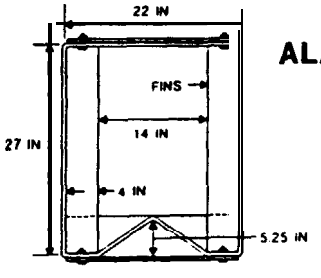

CROSS SECTION

ALASKA STEEPPASS

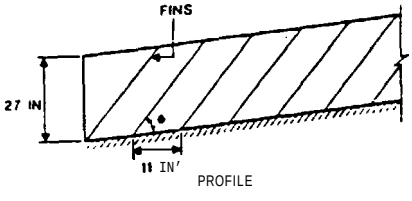

PROFILE

CH

a culvert, a series of low walls across a channel (weir and pool fishway) or merely a chute up which the fish swim.

FISHWAY CHAMBER OR UNIT: one of the parts of the fishway which governs the type of flow through the fishway (chute, weir and pool, lock etc.).

FISHWAY ENTRANCE: downstream opening in the fishway structure through which fish enter the fishway; also the outlet for the fishway attraction flow.

FISHWAY EXIT: upstream end of the fishway from which fish exit the structure; also the intake for the fishway flow.

FLOW: The amount of water passing a point (or cross-section) in a tishway; discharge; measured in cubic feet per second; volume of flow per unit of time. Symbol Q.

FLOW CONTROL: the means whereby the amount of flow and the drop in water surface elevation pools is controlled; can be by weir walls across the fishways; weir openings of various shapes; ports through the bottom of the weir walls; baffles (short walls perpendicular to flow extending from the fishway side walls and floor; and vertical slots (developed for Hell's Gate slide on the Frasier River in B.C.).

KINETIC ENERGY: the energy due to the velocity of the flow; caused by gravity in fishways and streams.

MOMENTUM: product of the discharge multiplied by the net change in velocity when the flow changes direction, or the velocity is dissipated in a large pool, such as attraction flow.

RELATIVE VELOCITY: speed at which a fish moves relative to the water, or to the boundary of the fishway.

STREAM: any moving body of water; all rivers are streams, but not all streams are rivers.

SIKESS: Can be caused by: repeated expenditures of energy (say in unsuccessful jumping at a barrier); chemicals, temperature and oxygen levels; prolonged swimming at a taxing rate; swimming from a lower to higher velocity region; or environmental changes.

VELOCITY: speed of water through a cross-sectional flow passage area; mean velocity equals flow amount divided by cross-sectional area of the flow. Local velocities can be considerably higher or lower than the average through a passage. Symbol V.

VELOCITY PROFILE: values of velocity at different depths at a section; higher velocities near surface reduce to zero at the bottom.

INTRODUCTION

"Artificial destruction has made lakes and rivers as barren as deserts, so far as fish-food is concerned. Prior to the gold period the Tuolumne (River in California) abounded in cslmon, but the mud of mining destroyed them, or drove them away. The Connecticut (River) was also a salmon stream until obstructed by dams, and poisoned by those strangely-complicated filths for which our civilization is peculiar. When fish ladders are constructed over dams and the sewage of towns and factories is consumed upon the land instead of being poured into the water, leaving paths from the ocean to the spawning grounds free and clean, then our valuable migratory food fishes, such as shad and salmon, will again become abundant....."* John Muir, McCloud River, 1874.

This statement by John Muir, made about 100 years before our environmental awareness became manifested in law, speaks to a number of societal, scientific and engineering problems which seem to keep recurring. It leaves one with the impression that there is very little carry over in the environmental experience record from one generation to the next. Disasters in the natural environment continue to be generated and accelerated by the artificial works of man.

As John Muir noted, fish ladder (as noted in the Glossary, a more general term is fishway , or fish pass) technology was available in the 19th century to bypass the dams which helped destroy the Connecticut River salmon runs. By the thirties and forties of our century, when the construction of the Columbia River system dams was initiated, the state-of-the-art of fishways had progressed significantly. Studies conducted in Britain, Europe, Canada, and the United States addressed numerous aspects of fishways. (Institution of Civil Engineers, 1942; McLeod and Nemenyi, 1940; Sackowicz and Zarnecki, 1954; Stuart, 1962; and Antonnikov, 1564; and U.S. Army Corps of Engineers, North Pacific Division anti the the Bureau of Commercial Fisheries, a series of reports, circa 1950-1970). (See Appendix I--References)

The technology required to solve a general problem is often developed out of a specific adverse situation or a disaster. Such was the case following the 1914 rock slide into the Frasier River at Hell's Gate Canyon in British Columbia. After an in-depth evaluation of the problem, the new technology for the slotted fishway was developed under the direction of Milo C. Bell for the International Pacific Salmon Fisheries Commission in about 1943 (Clay, 1961).

When the hydropcwer potential of the Columbia River was being developed it became readily apparent that none of the available literature adequately addressed the problem of fish passage through hydro-electric facilities of the size and complexity of those on the Columbia River.

---

* Engberg, Robert. John Muir Summering in the Sierra. Quoted with permission from the University of Wisconsin Press. Madison, Wisconsin. 1984.

Consequently there was a considerable amount of pioneering research conducted at the Corps of Engineers Fisheries - Engineering Laboratory at Bonneville by personnel from various agencies. Following the installation of some of the Columbia River dams, prototype tests were conducted on a variety of subjects including the attraction of fish to the fishway entrances when spillway and powerhouse gates were set at various openings (Corps of Engineers, 1956, 1960).

Following the completion of most of the dams on the Columbia River mainstem, the Fisheries - Engineering Laboratory at Bonneville was closed in the 1970's. Since then many operational and design problems in upstream and downstream fish passage have arisen which could have been more efficiently addressed had the laboratory been retained.

Consideration should be given by the various federal and state agencies associated with fisheries in the Columbia River Basin to the reestablishment of a cooperative fisheries-engineering research facility. The new facility should have a basin-wide, bio-engineering orientation so that problems inherent to resident, as well as migratory, species can be addressed on an integrated, interdisciplinary basis. Continuing education functions should be a strong component of the laboratory program so that research results are directly translated into applications.

PROJECT SYNTHESIS

Project 82-14, Development of New Concepts in Fishladder Design, grew from two sources of interest in 1981:

(1) the recognition that some aspects of fishway design were not based on fundamental principles of fluid and biomechanics; and
(2) the desire to bring more economic efficiency to bear in solving iish passage problems.

The first point was addressed by the principal investigator through research conducted during 1980-81 while on professional leave (Orsborn, 1981). The second point was raised by personnel from Bonneville Power Administration in conjunction with the meteoric rise in applications to build small-scale hydropower facilities (SSH).

Concern was expressed that if traditional fishway designs were applied to SSH installations they could prove to be a significant, if not prohibitive part of total project costs. Also, the amount of water required to pass fish in traditional, large-scale tishways could be excessive in terms of both the timing and amount of water available to produce small-scale hydroelectric power. Thus, the joint interest in assessing traditional methods of fish passage, and in seeking to develop new methods to meet the needs of smaller stream systems, led to the formulation of this research project. Although there are most certainly effects of system "scale" (size), the results of this research will will find application to numerous large and small, natural and artificial upstream passage problems.

As shown in Tables 1 and 2 under Item K, originally the project was organized in four parts covering:

(1) a state-of-the-art review of fishway design practices;
(2) design handbook for fishways;
(3) development and testing of new fishway ideas; and
(4) an annotated literature review.

As the project evolved, and the opportunity arose to conduct some prototype tests of new fishways at hatcheries, effort was concentrated on three main components:

(1) basic and applied laboratory and field research on a new weir and pool fishladder design (Project Report Part 2);
(2) an assessment of the historical development of fishways, their operational and performance characteristics, limitations, current design practice, hio-engineering considerations and construction aspects (Project Report Part 3); and
(3) laboratory and field analysis of the problems associated with the upstream migration of fish past natural and artificial barriers such as waterfalls, culverts and low dams (Project Report Part 4).

Our general project objective was to improve fishway "efficiency" through:

(1) reducing the amount of water required to pass fish;
(2) reducing the amount of cost for fishways through alternative construction methods; and
(3) reducing the time required for fish to negotiate a fishway, thereby reducing delays in the biological time schedules.

The activities in which we were engdged and the tasks we performed in developing the new fish ladder are summarized in Table 2. The differences between Tables 1 and 2 are in Parts H, I, J and L, and dealt mainly with testiny the new ladder desiyns at hatchery access ladders, rather than at small, prototype dams.

In addition to the activities noted in Table 2 which were conducted as part of the new weir and pool development, we conducted studies and analysis of these additional topics associated with natural and artificial fishways:

- fishways as systems;
- fish swimming and leaping capabilities (bioenergetics);
- submerged and exposed jet theory and air entrainment;
- fishway design criteria;
- new materials and methods for fishway construction;
- methods for classifying fishways, including culverts, chutes and waterfalls;
- the historical development of the science, engineering and art of fishway design;
- biomechdnical limitations on fish passage;
- hydraulic conditions within fishways;
- stumuli and stresses which fish can experience in traversing fishways;

ORIGINAL 1982-1983

Table 1. Details of Activities - Part II - New Ladder Design and Testing

A. Foundation Information
1. Write up earlier tests and applications literature.
2. Basic theory and concepts.
3. Nomenclature/sketches.
4. Design criteria/objectives.

B. Model Preliminaries
1. Preliminary model designs.
2. Order materials.
3. Final model designs.
4. Lower Granite Dam, preliminary arrangements.
5. ½ and ¼ models to verify momentum and energy scale relationships.

C. Build Models
1. Chamber construction.
2. Piping (supply and return).
3. Tailwater weirs.
4. Model weirs.
5. Photographic lighting.

D. Hydraulic Model Test Program
1. Dimensional analysis.
2. Preliminary program.
1. Data form.
4. Select weirs for testing.
5. WF weir calibration.
6. Jet standing wave relation,.
7. Select "best" WF weir.
8. Energy dissipation and rest areas.
9. Alternative ½ and ¼ scale models tests.
10. Special tests.
11. Photographic records.
12. Lover Granite tests.

E. Preliminary Field Observations
1. Good and poor ladders.
2. Waterfall passage/leaping, good and poor conditions.
3. Types of ladders.
4. Test sites for proto. year 2.
5. WDOF and WDOG alternate test sites.
6. Photographic record.

F. Data Analysis
1. Model test.
2. Lower Granite tests.

C. New Ladder System Design
1. "Unit" designs.
2. Supply flow/controls.
3. Ladder attraction flow.
4. Retrofit applications.
5. Lover Granite facilities.

H. Prefabrication of Prototype Test Ladders
1. Locations.
2. Cooperators (agencies, manufacturers).
3. Prefabrication and transport.
4. Site preparation.
5. Installations in field.

I. Observations
1. Data on passage.
2. Possible field design modifications.

J. Comparative Analysis of Test Results
1. New ladder units.
a. Laboratory
b. Field
2. Existing ladders.
a. Literature
b. Field
3. Systems analysis: Inlet, chambers. outlet. Fish outlet. passage, fish inlet.

K. Project Report
1. Part I State-of-the-Art
2. Part II Design Guide
3. Part III New Designs
4. Part I and 11 Literature

REVISED 1983-1984

Table 2. Details of Activities - Part II - New Ladder

A. Foundation Information
1. Write up earlier tests and applications literature.
2. Basic theory and concepts.
3. Nomenclature/sketches.
4. Design criteria/objectives.

B. Model Preliminaries
1. Preliminary model designs.
2. Order materials.
3. final model designs.
4. 55 scale models to verify momentum and energy scale relationships.

C. Build Models
1. Chamber construction.
2. Piping (supply and return).
3. Tailwater weirs.
4. Model weirs.
5. Photographic lighting.

0. Hydraulic Model lest Pmgram
1. Dimensional analysis
2. Preliminary program.
3. Data form.
4. Select weirs for testing.
5. WF weir calibration.
6. Jet standing wave relations.
7. Select "best' WF weir.
8. Energy dissipation and rest areas
9. Alternative ½ scale model tests.
10. Special tests.
11. Photographic records.

E. Preliminary Field Observations
1. Good and poor ladders.
2. Waterfall passage/leaping. good and poor conditions.
3. Types of ladders.
4. Test sites for proto. year 2.
5. HOOF and WDOG alternate test sites.
6. Photographic record.

F. Data Analysis
1. Model test.

G. New Ladder System Oesign
1. "Unit" designs
2. Supply flow/controls.
3. Ladder attraction flow.
4. Retrofit applications.

(a). Prepar
Tests
1. L
2. Co
f
3. Co
4. Ch
5. De
6. De
7. At
s

(b). Prepar
1.. PP
2. Pr
a
3. De
i
fi

I. Obser
1. Fi
2. Ob
i
ii

J. Compar
1. N
i
ii
2. Sy
c
l

K. Projec
1. Pa
S
2. Pa
De
3. Pa
Ne
4. Pa
L

L. Possib
(if re

Revised July. 1983

Table 2.

- an analysis of the energy expended by fish swimming through ports and up chutes, or leaping past elevation barriers;
- the optimization of weir shapes and angles to provide the best leaping conditions;
- an analysis of the depth at which fish swim through fishways and culverts to avoid higher velocities;
- methods of migration barrier analysis which consider approach, passage and exit conditions and then match the modifications to the barrier to the biomechanic capabilities of the fish species in question; and
- development and verification of a new chute and pool fishway which greatly simplify the design and cost of fishways of the Denil or Alaska Steeppass types.

Our studies have concentrated primarily on the fluid mechanics, hydraulics and biomechanics associated with attracting fish into a fishway and passing the fish through the system. We did not include other aspects of siting, fish guidance structures, gates and other flow controls, the relationships of fishways to dams and powerhouses, and subjects dealing with many of the biological criteria. These topics are well covered in the classical documents by the Institution of Civil Engineers (1942), Clay (1961) and Bell (1984).

PROJECT PHILOSOPHY

During our study, we concentrated on:

- explanations of why certain flow conditions occur in fishways;
- which stimuli are important in fish passage as well as how fish respond to those stimuli;
- methods of improving the internal flow mechanics of fishways by applying basic fluid mechanics theory to designs and testing them in the field;
- seeking ranges of operational conditions (windows) which provide good passage conditions, rather than seeking so-called "optimum" conditions;
- stretching design criteria associated with fish capabilities so that they more closely agree with natural passage conditions;
- @recognizing that all designs are limited by the state-of-the-art at the time of their development, but at the same time trying to define why certain conservative design criteria and philosophies have been perpetuated; and
- testing some of these "criteria" to determine whether their perpetuation could be justified where compared with known biomechanic conditions.

For example, the Institution of Civil Engineers report of 1942 (page 7) stated:

"The three essentials for a fish-pass are:-
The fish should be able to swim through it without undue effort.
They should do so without risk of injury.
The pass should be quickly and easily found."

Considering the basic concepts of fishway design, in order of importance, finding the fishway is certainly the predominant factor. Avoiding injury is of importance in moving through the fishway. But, "undue effort" has yet to be

defined. It certainly must consider pre- and post- fishway conditions at the site in question, and it must consider all aspects of the effort associated with passing the affected reach of stream, not just the fishway.

Consider the construction of a dam at a site which eliminates a waterfall which was passable by a sustaining number of adult upstream migrants. The fishway for the dam was designed to avoid "undue effort" on the part of the fish, so it was designed with one-foot drops between pools to cover a total height twice that of the original falls.

Assuming that the stronger fish were able to pass the falls in a series of four leaps of 4 feet each from pools, a four-pound fish would have expended a total of about 49 ft-lbs of energy.* With the dam in place, and a new height of 32 feet to pass, the fish would expend about 1.6 ft-lbs of energy if they swam through a flow with a 1- foot drop over a weir, or about 51 ft-lbs of total energy. If they leaped the 1- foot between pools they would expend about (3 X 32) or 96 ft-lbs of energy. Once the drop between pools exceeds greater than about two feet, fish expend less energy leaping than swimming through the jet. Our observations of fish passing over weirs ranging in height of from one to three feet verify this theoretical change in energy expenditure. As long as the drop in water surface between pools was less than two feet, most fish (depending on the species and the weir shape) swam up the jet. At drops greater than two feet most fish, regardless of the species, leaped over the weir.

Had the new fishway been of a weir and port design, and had the fish chosen the port route, as they usually do because it has more attraction momentum than the weir, they would have expended about 7.2 ft-lbs of energy per port, or a total of about 230 ft-lbs in traversing the fishway past the dam.

Considering all the "undue effort" required to negotiate the entire dam environment, one must include the time delays caused by swimming through a slowly moving reservoir as opposed to the original stream. "Effort" must include all factors in the pre- and post- dam environment, and must include modifications to the biological clocks of the species in question.

Another drawback to conservative fishway design is that it allows many of the rough fish to pass, including predators, as well as the weaker segments of the desired species. As a result, any form of natural selectivity is lost when conservative fishway designs are used. In some cases there may be no choice and all species may have to be allowed to pass. But, where a choice can be made, and selective passage is desirable, then the fishway should be designed to meet that objective. Otherwise, natural segregation of various species into physically and quality controlled reaches will be negated. The basic question seems to be not whether the fishway should allow all fish to pass, but rather,

---

* Details of the energy expended by fish when swimming and leaping is presented in Report No. 3 of this series. See the Summary of Project Reports at the front of this report.

what degree of natural selectivity existed at the site under natural conditions.

Perhaps it is sufficient to say that due to the large number of anadromous fish runs which have been lost throughout the world, it is in the best interest of mankind to do what we can to sustain and improve our natural fisheries resources before they are decimated beyond recovery. This should be achieved without using tack-on devices and expedient solutions which do not address the roots of the problems. Hopefully, better bio-engineering designs will provide the basis for better decisions by managers.

Some fishways have had limited passage success due to the pressures of a build-oriented environment, wars, construction schedules tor dams, poor construction, and a lack ot program support for necessary research. Many fish passage problems have been "solved" with short-term, site specific solutions. Some of these solutions did not allow tor the development ot the basic interrelationships between the fluid dynamics of the ladder, the created (built) environment of the ladder and the environmental constraints on the tish. Usually design has been fish response oriented, rather than fish stimulus oriented. More seriously, many designs have been constrained by the perpetuation of myths.

For example, the statement that "fish hate white water" is woven throughout the less-technical literature, and even appears in some scientific writings of an earlier vintage. This was perpetuated because people thought that the fish could not get a good thrust with their tails in the lighter water when leaping at waterfalls. On the contrary, consider the times you have observed fish, or have seen pictures of them leaping at waterfalls. Where do they commence their leaps? They do so from the white, air-water, turbulent mixture, called the "standing wave," at a point downstream of where the falls strikes the pool. In most cases it is the rising bubble velocities which entrain the water around it causing the standing wave. It is from this upwelling, which adds an upward velocity component, that fish usually project themselves over a falls, or fishladder weir, or enter a culvert which has a cantilevered entrance. Fish are able to achieve burst speed in a very short distance and need only enough depth to turn up through the standing wave, having previously "sighted" the crest from downstream of the wave (Stuart, 1962).

The Bonneville Power Administration (BPA) supported this project commencing in June, 1982, prior to the adoption of the Fish and Wildlife Program of the Northwest Power Planning Council (NPPC) in November, 1982 (NPPC, 1984). But the project emphasis, objectives and results match very well with two of the six key NPPC fisheries goals, adult survival and natural reproduction (NPPC, 1982).

The following statement, made in 1937, still appears to be applicable in many respects almost 50 years later. We seem to be gaining ground on the subject of fishway design, but we are still faced with a high degree of uncertainty in many situations.

"The designing of a fish pass is fraught with uncertainty, because it is almost impossible to prophesy the behavior of fish and quite impossible to anticipate the vagaries of water. The subject involves a working knowledge of hydraulics; and, while hydraulic engineers conversant with the habits and requirements of fish are rarely to be found, the rules and assumptions of hydraulics themselves are apt to be disconcertingly upset when applied to the functioning of a fishpass. The subject is by no means within sight of finality. There is indeed much about it yet to be learnt--and unlearnt," (Pryce-Tannatt, 1938).

SUMMARIES OF PROJECT COMPONENTS

NEW CONCEPTS IN FISHWAY DESIGN (Report No. 2 by R.G.Aaserude and J.F.Orsborn)

Introduction

Over the course of the past 20 years, increasing competition between various user groups for fisheries and water resources has spawned a heightened sense of environmental awareness. More recently, this has resulted in a renewed emphasis on restoring fisheries resources, and a new emphasis on conserving water resources. Fishways are unique in that their efficient performance directly affects the satisfaction of both of these priorities. The purpose of the report is to present the results of a portion of a two-year study of fishway design dealing with a new approach to weir and pool fish-ladders.

Fishway design is necessarily a topic of considerable breadth and complexity. The approach taken in this study was thus three-pronged, beginning with a comprehensive literature review. Since fishway design is a subject which is interdisciplinary in nature, fisheries considerations were reviewed in detail in addition to hydraulic theory.

As a result of the literature review, a new fishway design concept was identified that previously had been untested. This concept was based on the observation that fish can be stimulated to leap when presented with certain hydraulic conditions. The second phase of the study was directed towards developing this concept into a new configuration in the laboratory.

The final phase of the study involved field testing of the new fishway configuration with coho and chum salmon. Observations of fish behavior and capability are discussed as they pertain to the performance of the new fishway design. Although it was concluded that components of the fishway design improve fish passage significantly, verification of the initial premise that fish can be stimulated to leap requires further study.

Basis of the New Weir and Pool Design

In 1962 Stuart published a paper titied "The Leaping Behavior of Salmon and Trout at Falls and Obstructions." In this work, Stuart offers an explanation as to why migrating salmon and trout show preference for certain flow conditions in their movement upstream. Stuart concluded that the stimulus for movement appears to be the "force of the impact of falling water". He noted also that "leaping was initiated when the ratio of kinetic and potential energies was high in the section of water just ahead of the fish. That is when conditions were such that a standing wave was formed."

The concept was new that fish could be stimulated to leap, or preferred to leap, when confronted with certain hydraulic conditions. Up to this point in time it was widely believed that fish preferred swimming to leaping, and would opt for the latter only as a last resort. For this reason, as aptly defined by Clay (1961), fishway design efforts had historically focused on providing water passages for swimming. The concept of designing a hydraulic environment conducive to leaping had not received serious consideration, and as Stuart (1962) suggests, "the perfect fish pass has not yet been designed."

Additional evidence appears in the literature that is supportive of the concept of a hydraulic stimulus for leaping. After observing rainbow trout, Webster (1965) writes "they picked a common watery pathway enabling them to take full advantage of the hydraulics of the currents and turbulence below the falls--a path culminating in the spectacular jumps." Bell (1984) notes that jumping, while not being fully understood, "is known to be triggered by shadow patterns or upwelling." Upwelling is symptomatic of the standing wave described by Stuart and the erroneous upwelling in the corners of some fishway chambers.

It is also interesting that even as early as 1940 (before ethology was in vogue) there is indirect reference to stimulus. In a discussion of pool and jet fishways, it is written that "the overfall type has the advantage of being attractive to the fish" (McLeod and Nemenyi, 1940). Although the authors do not try to explain this behavior, it requires little effort to conjure up the image of the <u>force of the impact</u> of falling water.

Although Stuart's paper has been in print for over 20 years, his ideas are still new and largely untested. Whether fish are stimulated to leap or move by the force of the impact of falling water is uncertain. It is a perspective that necessarily comes from the fish, which complicates the analysis. Observations of fish behavior do tend to substantiate the premise. It seems intuitive that fish sense the momentum and pressure fluctuations in the flow. Humans can sense these conditions by placing their hand in the path of a water jet. If this postulate of the stimulus for fish movement can be accepted, then the real task is to develop its application for use in fishway design. The definition of a fishway might then read, "a hydraulic environment so constructed as to dissipate the energy in the water in such a manner as to stimulate fish to ascend without undue stress." It is with the spirit of this definition that

the objectives of this study were established. They are:

1. to determine the physical mechanism and magnitude of Stuart's standing wave;
2. to develop a fishway configuration based on the concept that fish can be stimulated to leap; and
3. to assess the performance of the new fishway in the field.

Fisheries Considerations

The idea of taking a fresh look at weir and pool fishladder design principles is exciting for anyone who has had the opportunity to view leaping trout and salmon. Leaps as high as 11 feet 4 inches for salmon have been reported in the literature (Calderwood, 1930). Pryce-Tannatt (1938) suygests that "a sheer fall of 6 feet is probably, to all intents and purposes, about the maximum practicable for the great majority of salmon, even under the most favorable conditions." Although the values reported are maximums, when compared with current design recommendations requiring only one foot of drop between pools (Bell, 1984), the potential for increasing the pool-step height is obvious. In fact, one might question the apparent substantial disparity between fish capabilities and the requirements imposed upon them. It seems that a large bio-engineering factor of safety is involved. This is usually the practice when working with systems that are poorly understood, inherently variable, or exhibit unpredictable behavior. This seems to be the approach taken towards estimating fish capabilities.

The contention that biological systems are inherently variable cannot be challenged or changed. What can be changed is the level of understanding with which biological problems are approached. With an increased understanding of the factors which influence biological systems, it becomes possible to account for much of the variability, and the behavior of the system seems more predictable. Listed in Table 3 are several of the factors which influence fish capabilities.

Table 3. Factors which influence the swimming and leaping capabilities of fish.

Factor	Influence	Reference
Species of fish	Variable	Bell (1973) Jones et al. (1974)
Stock of fish	Variable	Vincent (1960)
Size of fish	Increased capabilities with increased size	Fry and Cox (1970) Brett and Glass (1973)
Time in the river (Sexual maturity, condition)	Reduction in capabilities with time	Idler and Clemens (1959) Sakowicz and Zarnecki (1962)
Site Geometry, Hydraulics	Optimal conditions exist which promote successful leaping	Stuart (1962) Webster (1965)
Temperature of water	Optimum range exists, above or below performance reduced	Brett et al. (1958) Griffiths and Alderdice (1972)
Lighting	More successful leaping under certain lighting conditions	Stuart (1962)

Even casual inspection of the factors influencing fish capabilities illustrates the potential for variability in the performance capabilities of any species of fish that might be targeted for passage. There is little reason to wonder why swimming capabilities reported in the literature are sometimes in disagreement (Paulik and DeLacy, 1957). Estimating the performance capabilities of a targeted fish necessarily requires a general knowledge of fish capabilities, tempered with project specifics and sound judgement.

Conclusions

The results of laboratory experimentation guided the development of a new fishway configuration based on the concept that fish can be stimulated to leap. Field tests to assess the performance of the new fishway provided insight into fish response which served to further refine the design. From these studies the following conclusions were reached.

1. The physical mechanism governing the formation of the standing wave, as described by Stuart (1962), is the buoyancy ot entrained air bubbles. Stuart's tests were run in a small apparatus at small heads and may have been influenced by the shallow pool depth. We ran plunging jet tests similar to Stuart's but with an adjustable pool floor, and confirmed his results.
2. Ihe magnitude of the vertical velocity in the standing wave is a function of air bubble size. A typical upward velocity is 1.4 fps.
3. Standing waves can assist leaping fish.
4. Perforated or slotted baffles improve fishway pool hydraulics by dissipating energy, directing flow, and providing resting zones. Slotted baffles are better.
5. Baffles improve fish passage by guiding fish; slotted baffles are best.
6. It is possible to enhance the standing wave with a deflector (shaped pool floor) which directs the plunging jet back towards the surface. Vertical velocities of 5.5 fps were measured in enhanced standing waves.
7. The required depth of the fishway pool is a function of jet entrance velocity and geometry. However, since the range of velocities that occur in fishladder weir jets is limited, our data suggest that jet geometry (amount of flow and fall height) is the dominant factor influencing fishway pool depth requirements.
8. A minimum weir opening of 24 inches at the water surface for salmon and trout is adequate. Generally, the larger the weir opening provided, the better. A similar circular weir with 45" flaring sides, placed either at a 45" downstream angle, or in the vertical plane, worked best. The baffles should extend to the top of the weir wall.
9. Fish do often leap from the standing wave. It is uncertain whether they do because they are stimulated or that it is coincidental that standing waves occur where fish would naturally initiate a leap.
10. A methodology was developed to match fish capabilities with fishway pool elevation differentials.
11. Fish capabilities are often underestimated in the design of fishway pool step sizes. From this study, pool steps of 1.25 feet and 2.0 feet seem reasonable for chum and coho salmon, respectively, providing the weir geometry is correct.

Suggestions for Further Study

The broad scope of our study presented limitations which precluded the in-depth treatment of several topics which were worthy of closer inspection. For this reason, at times it seems that we were unveiling more questions than we were answering. It is suggested that further study of the following areas will increase the understanding and development of fishway design principles.

1. Free jet entrainment - Practical guidelines for the design of fishway pool geometry can be derived from the definition of descriptive equations for the entrainment ot jets of variable size, shape, and velocity.
2. Weir design - Definition of jet shape versus fall height for variable weir shapes, orientations, and sizes can be used in conjunction with free jet theory to develop design curves for fishway pool geometry.
3. Standing wave enhancement device - Additional laboratory and field testing is required to define operational parameters and fish response to different upward flow deflectors on the floor.
4. Fish capabilities - Additional data are required to develop curves matching fish capabilities to fishway pool elevation differentials for the various species of anadromous and resident fish.

The recommended geometry of the new weir and pool fishway developed in this study is shown in Fig. 4, and in operation in Fig. 5a-5m.

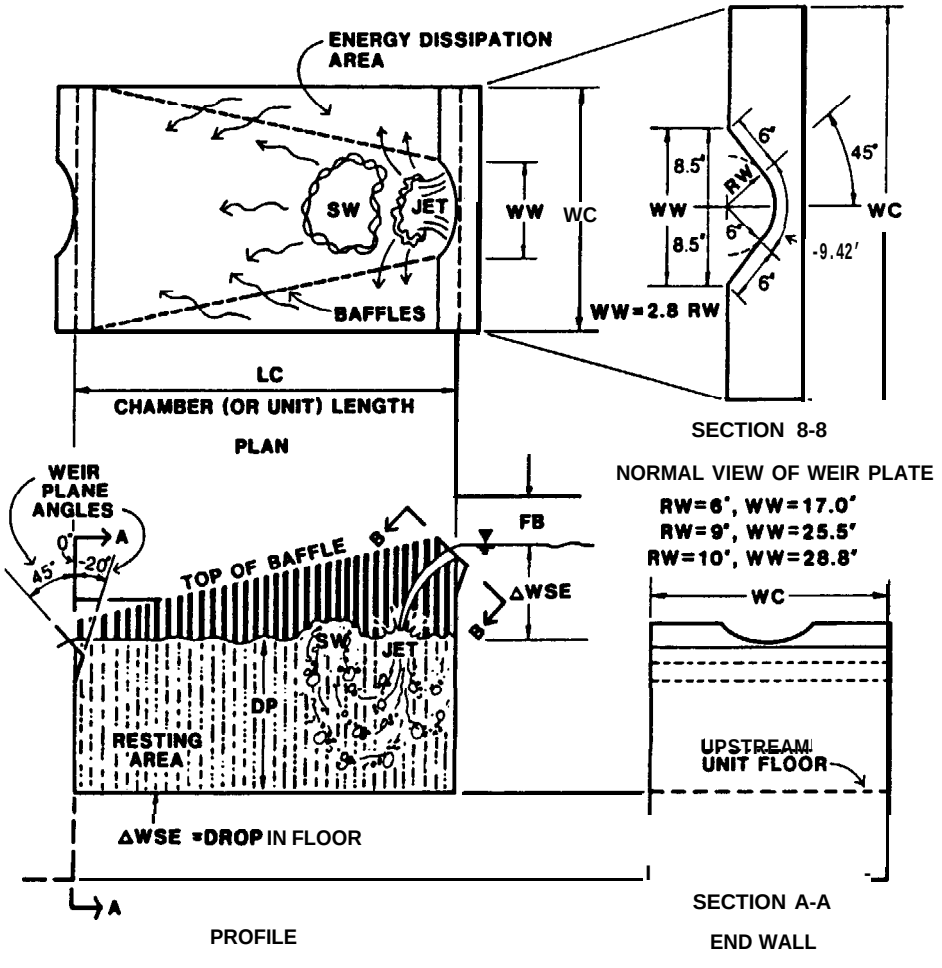

NOMENCLATURE FOR NEW WEI

DP = Depth of Pool
FB = Freeboard
LC = Chamber Length
RW = Radius of Weir

CRITERIA FOR DESIGN A

- Slotted baffles at 50% opening; 1' x 2
- Leave I-ft. square opening at bottom fish exit in case they fall behind baf
- Perforated plate baffles with round hol
- For baffle arrangement shown. cha minimized.
- Baffles make flow unffora. dissipate downstrea, and guide fish to jump fra
- Vertical weir angle θ = 45' works best If not covered by baffles; 0° O.K.. cling to wall.
- For weirs shown, range of operating how anxious to move the fish are.
- Ufll operate at higher flows (10 ct baffles.
- Flared weir gives better clearance range, and better jet shape than semicf
- Uater Surface Drops (ΔWSE) tested up to
- Uefr Width (WW) should not be greater t
- Length (LC) to Uidth (WC) Ratio abou ladder for resident trout.

Fig. 4. Recommended geometry for new weir and pool fishladder.

Fig. 5a. Initial "Waterfall Weir" tests at Johns Creek Fishway, October, 1983, near Shelton, WA. Fishway is 5 ft. wide with 6- or 12-ft. long pool.

Fig. 5b. Semicircular Weir about 3 cfs without baffle asymmetrical flow in chamb Pool drop is 2.6 ft.

Fig. 5c. Female chum swimming up jet with drop of 1.1 ft. No baffles.

Fig. 5d. Male chum leaping 1.8 ft. with no baffles.

Fig. 5e. Small coho leaping 2.1 ft. Flared weir top is 30 in. Flow is 3 cfs. Baffles submerged.

Fig. 5f. Male chum leaping 2.1 ft. with same conditions as Fig. 5e. Baffles below pool surface.

JOHNS CREEK HATCHERY POOL AND WEIR FISHWAY TESTS, OCTOBER, 1983.

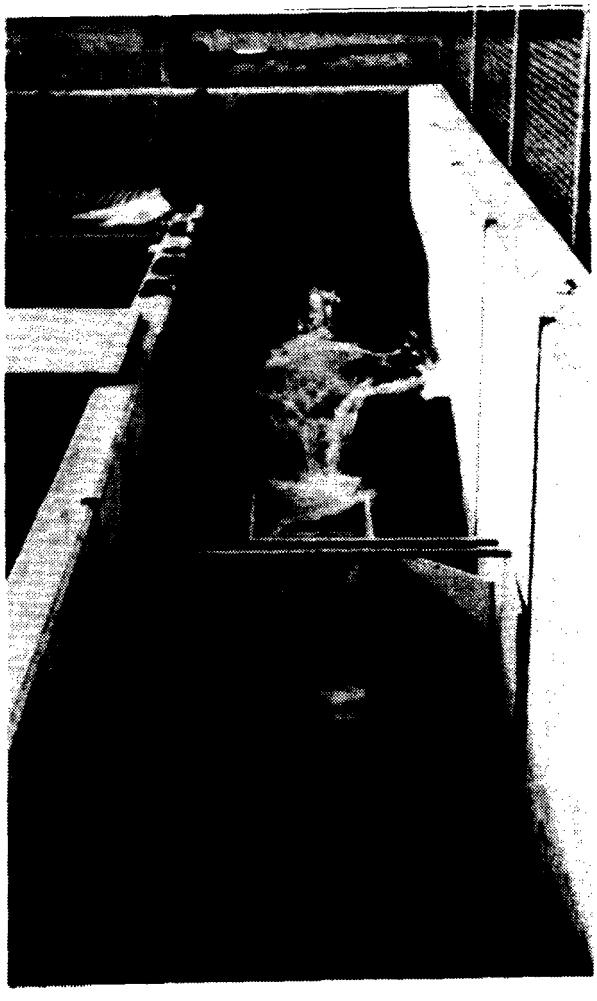

Fig. 5g. Weir tests with modified baffles to weir wall, and no baffle. Pools 6 ft. long. Johns Creek tests Oct.-Nov., 1983.

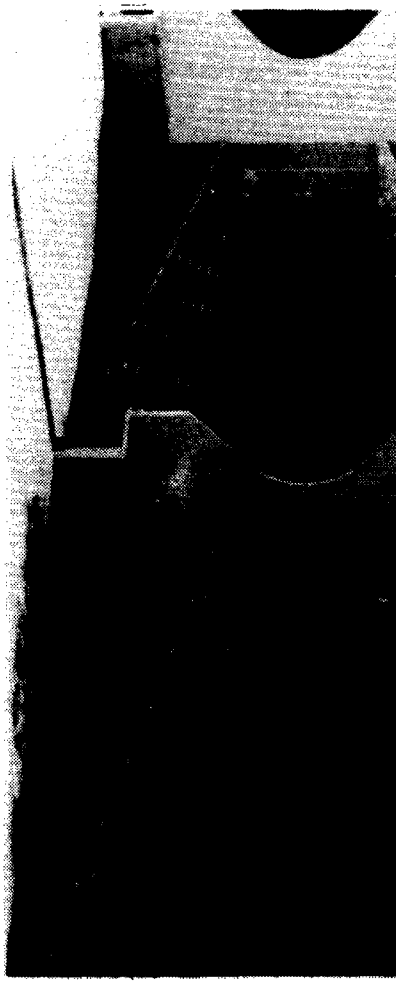

Fig. 5h. Low perforated flared weirs tipped ups Part of baffle design s Pools 6 ft. long. John Oct.-Nov., 1983.

Fig. 5i. Low-perforated and high-slotted baffles. Low baffles allow fish to get trapped behind unless baffle has gap at floor. Slotted baffle to top of weir with 50% blockage is best.

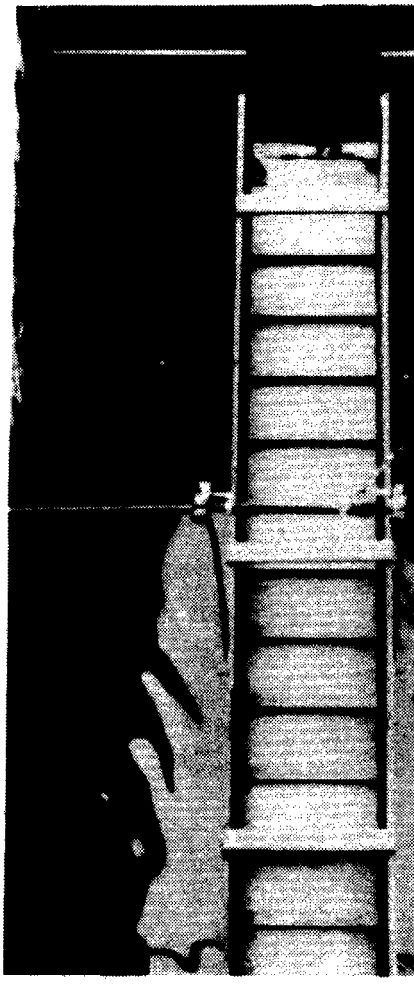

Fig. 5j. Chute and pool fi roughness strips only on that passed chum salmon o for 8 ft.

Fig. 5k. Small coho leaping 2 ft. with slotted baffles-guide walls. Same conditions as Fig. 5i foreground. Flow about 3.0 cfs.

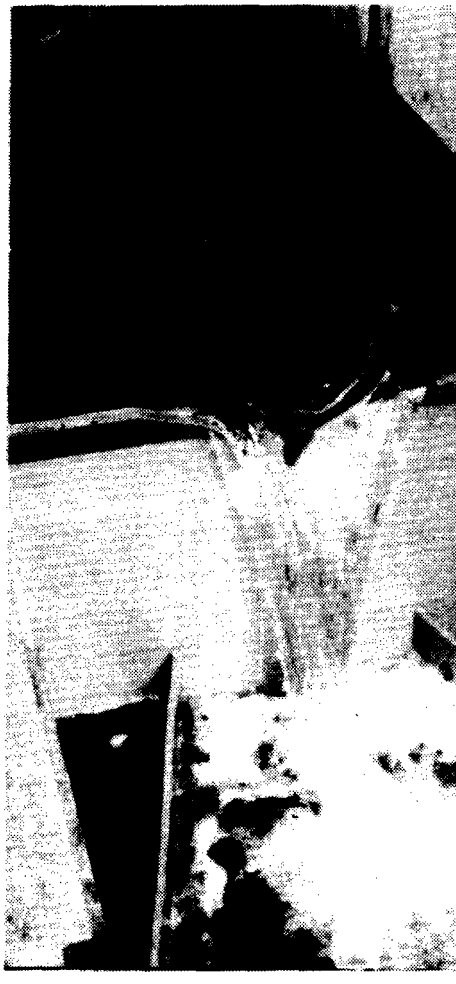

Fig. 5m. Large coho leaping 3 perforated baffles. Flow is Tests run at Johns Creek hat October-December, 1983.

FISHWAYS - AN ASSESSMENT OF THEIR DEVELOPMENT AND DESIGN
(Report No. 3 by John F. Orsborn and Patrick D. Powers)

Historical Development of Fishways and the Evolution of Design Concepts

"It now behooves all persons engaged in this great industry to do everything in their power to devise means to open other streams closed by mill dams or natural falls, for natural breeding, and also to increase the facilities for artificial propagation which, I am satisfied, will be of great value in assisting to keep up the supply of salmon in this river," (Anonymous, 1886).

The need to preserve and enhance natural stocks of resident and anadromous fish has been recognized for at least the past 100 years. Much of this interest has been directed towards fishway design.

The earliest fishways designed and constructed were of the weir and pool type (Fig. 6). Termed fishladders, such structures have been existence since at least 1853, as evidenced by the successful Ballysodare fishladder in Ireland (Pryce-Tannatt, 1928).

In 1861, the British Salmon Fishery Act was passed. Included in the provisions were requirements that fish passes be installed and maintained "in an efficient state" at new dam sites on salmon rivers (Pryce-Tannatt, 1938). Despite the intentions of the law, it is recorded that fishway failures were a problem in the era (Calderwood, 1930). Early design efforts were based more on empiricism and intuition than on scientific endeavor.

Denil is credited with the first systematic scientific investigation of fishway design beginning in about 1908 (McLeod and Nemenyi, 1940). His work culminated in the development of a chute type fishway with large roughness elements (Figs. 7 and 8). Variations of his original design are still commonly used today.

Perhaps the most significant contribution by Denil was the rational approach to fishway design that he pioneered. He was the first to develop a basis for assessing the mechanical capabilities of fish and matching them to the opposing hydraulic forces within a fishway (Inst. of Civil Engineers, 1942). Denil's work was done in Belgium.

The first systematic American investigation of fishways occurred in 1939-40 (McLeod and Nemenyi). Many fishway types were modeled and live fish were used in the testing. Although the study was largely inconclusive concerning specific recommendations due to its wide scope, there was one significant study component. This was the first major fishway study to consider fish behavior. Interestingly, one of the comments concerning fish performance was that "it appeared that the fish learned to climb." This was quite a progression from the mechanical perspective studied previously.

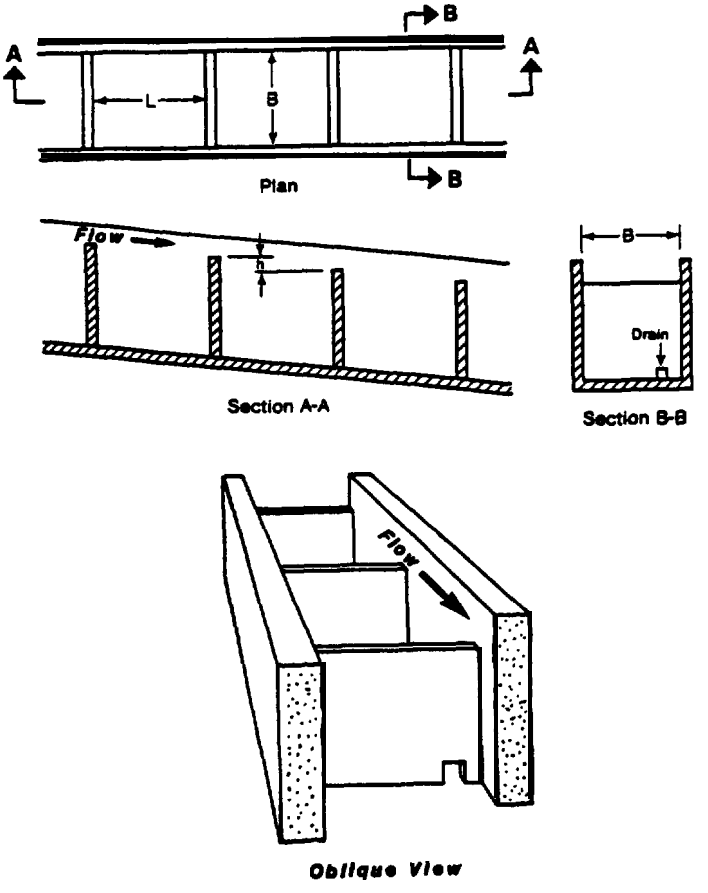

Fig. 6. A Schematic of the Full Weir Type Fishway (after Katapodis and Rajaratnam, 1983).

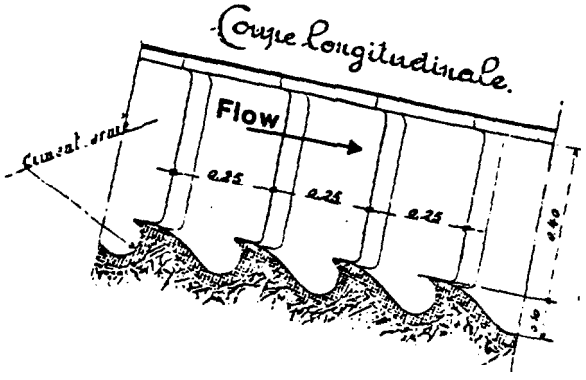

Fig. 7. Side View of the Original Chute Type Fishway Designed by Denil (after Denil, 1909).

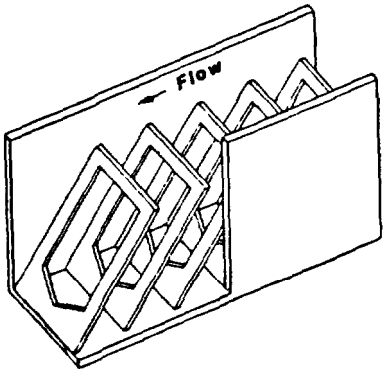

Fig. 8. Oblique View of a Commonly Used Variation of the Denil Fishway Concept.

That fish behavior was beginning to emerge as a consideration for fishway design is further evidenced by the following excerpt from the "Report of the Committee on Fish-Passes" (Inst. of Civil Engineers, 1942).

> "Migratory fish have certain definite habits and well-marked preferences, which are displayed in their journey to their spawning grounds. One pass may prove entirely successful, whilst for another the fish may show a definite distaste. In designing a fish-pass, therefore, the problem is not merely an engineering and hydraulic one."

This notion of fish behavior and preterence was not widely accepted at this time. Within the same report it is written, "the fish is not a conscious being, able to act in anticipation of difficulties ahead."

During 1945-46, a major fishway was constructed at Hell's Gate on the Fraser River in British Columbia, Canada, after extensive hydraulic model tests. This event marked the beginning of a new type of fishway, the vertical slot (Fig. 9). Vertical slot fishways are commonly used where large fluctuations in river stage are anticipated, and where fishway flows are unregulated, because they function well over a large range of head.

The biological studies for the Hell's Gate fishway are also noteworthy because the concept of a biological failure to pass fish was openly considered. Factors such as "a trailing rope, the odor of a man, or some other disturbing factor" are mentioned as potentially deterring passage through an otherwise physically passable ladder (Jackson, 1950). Concern for the perspective of the fish had grown to such an extent that "psychological factors" governing the motivation of the fish to pass were mentioned. Jackson (1950) expresses it as the "point a sockeye becomes discouraged, changes its mind, and turns back to hunt for a new route." Spurred by failure, fishway designers were becoming sensitive to conditions which provoke a negative or avoidance reaction in fish.

It was not until the late 1950's that ethology, the objective analysis of behavior, was recognized as having "the possibilities of decoying and guiding fish through appropriate stimulation of their sensory mechanisms" (Hoar, 1958). As this concept gained interest with fish biologists and engineers, research in the field increased. The effects of darkness (Long, 1959), fishway capacity (Elling and Raymond, 1959), fishway slope (Gauley, 1960), flow velocity (Weaver, 1963), and sound (VanDerwalker, 1967) on fish passage rates were studied. This information served to improve the criteria for fishway design.

The first design manual for fishways was published in 1961 (Clay). In the text a fishway is defined as "essentially a water passage around or through an obstruction, so designed as to dissipate the energy in the water in such a manner as to enable fish to ascend without undue stress." This definition is significant in that it serves to characterize both the current and historical approaches to fishway development.

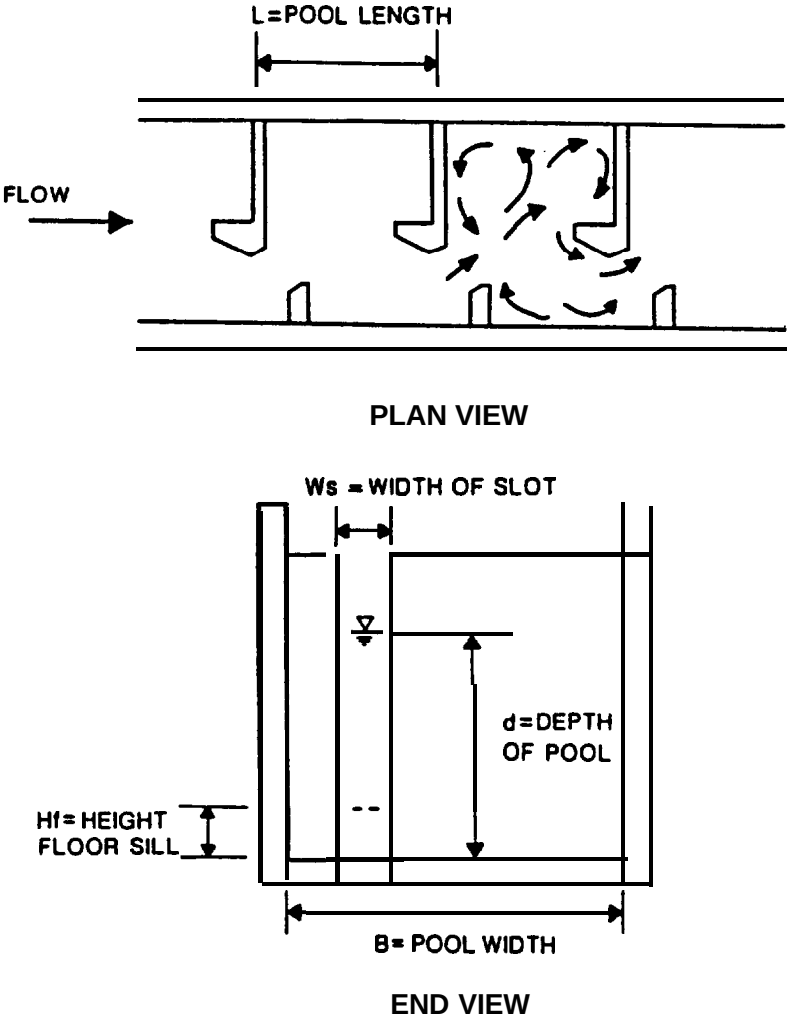

Fig. 9. Schematic of a Vertical Slot Fishway. Actually one-half of the original Hell's Gate Double-slot.

Classification of Fishways

In the body of Project Report No. 3 on Fishway Assessment, fishways are classified geometrically and hydraulically as: (1) fish ladders; (2) chutes and culverts; and (3) fish locks and elevators. For this summary report fishway classification has been arranged into two general categories:

(1) by type of water flow control as listed in Table 4; and
(2) by their degree of complexity or environmental control as shown in Table 5.

lhe information in Table 4 has been discussed in some detail earlier, Another way of visualizing fishways is to consider their degree of complexity, or naturalness (Table 5). The most natural fishway (Class 1), considering some type of elevation barrier, would be a waterfall which during higher flows would be passable by a percentage of the stronger fish of a certain species. Class 2 could be a modified waterfall with pools and notches blasted in its face for more complete passage that Class 1. The degree of complexity and artificiality increases to the right in Table 5 until one reaches Class 9. This could be a large dam in a completely regulated reach of river wherein both the upstream and downstream river flows and levels are regulated by other dams intertied with the dam in question. By necessity the fishway structure becomes more complex with automatic and/or mechanical controls on the fishway flows at several places throughout its system, including lateral collection systems. Fishways might be duplicated on both banks ot the river, and the total tishway and attraction flows would have to be very large to be effective.

At the upper extreme of artificial regulation is the fishway which leads to a hatchery. The final degree of the natural environment in the life phases of the fish has been eliminated--the home spawning gravels. Tables 6 and 7 summarize the type of passage structure, the passage mode and some general fishway design criteria in terms ot physical geometry and biological factors. More details are presented in Part 3 of this project report, but the essence of factors to consider are presented in these two brief tables.

In terms of design criteria in Table 7, once again fishway attraction and access is emphasized by the equation

$$NFI = NFO$$

or

No Fish In = No Fish Out

This can be carried a step farther into "2. Passage." If adequate resting conditions are not available at night (or even during the day) fish will drop back through the structure. Conversely, if too much resting area, or a sudden reduction in flow velocity is experienced in a part of the fishway, the fish will cease moving until they receive a stronger, upstream stimulus.

The geometric shapes of a large sample of fishways were presented in the Glossary in Figs. 2 and 3. Table 8 represents a summary of design criteria

TABLE 4.

CLASSIFICATION OF FISHWAYS - I

BY TYPE OF WATER FLOW CONTROL

WEIR AND POOL (Ladder) (STEPS)

WEIR, PORT AND POOL (Ladder) (STEPS)

SLOTTED (Ladder) (STEPS)

- wlth or w/o sill

BOUNDARY ROUGHNESS (Chute) (REDUCE VELOCITY)

- Denil
- Alaska Steeppass
- Chutes

OTHERS: Lifts, Locks,, etc.

TABLE 5.

CLASSIFICATION OF FISHWAYS - II

BY DEGREE OF COMPLEXITY'

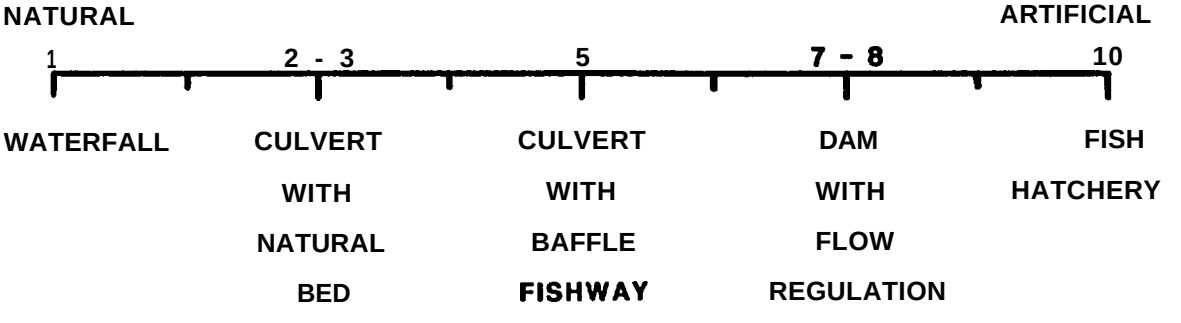

* Degree of Environmental Control

TABLE 6.
FISH PASSAGE

STRESS - - OVER, UNDER / CONTINUITY

TYPE OF STRUCTURE	PASSAGE MODE - SPEED
• POOL - ORIFICE	• SWIM - BURST
. POOL - WEIR	• LEAP - BURST
• CHUTE/STEEPPASS	. SWIM - PROLONGED, BURST
• CULVERT - BAFFLE	• SWIM THROUGH - BURST

TABLE 7.
FISHWAY DESIGN CRITERIA

PHYSICAL GEOMETRY

1. ACCESS	Fish Attraction NFI = NFO
2. PASSAGE	Stlmulatlon & Rest. . . Internal Hydraulics
3. EXIT	Don't fall back

BIOLOGICAL FACTORS

1. SPECIES	4. BURST AND PROLONGED SPEEDS
2. SIZE	5. LEAPING ABILITY
3. CONDITION	

Table 8. Accepted Design Factors Applied to Pool, Weir and Port Fish Lad

Designer or Author (Type)	D_w (ft)	Q (cfs)	v (ave) (fos)	d_w (ft)	Pool Space	W_c (ft)	(feet) Oh	Ow	Pool Dimensions L(ft)	B(ft)	d(ft)	Weir Shape
Menzies (1934) (Type C)	1-Z.5	5-6	Near sea 6.5-8 Away sea S-6.5					14-15		9-10		Trapezoidal
Bonnyman (1958) (Type D)	1.5	39	10				2.25 diameter		17	10		
McCloud & Nemeny (1939)[a] (Type A & D)	0.75			0.33-0.50			1.0	0.03	3	2.5	3	Rectangular
Committee on Fish Passes (1942) (Type C)	1.5(max)	12	8(max)	0.75 (min)		2			10	6	4	Rectangular
Committee on Fish Passes (1942) (Type D)	2(max)	24					1.5	1.5 length = 3-4.5'	10	4	4	
Decker (1346) (Type C & D)	1(max)						1.0	0.83	5-8	5-8		Cipolletti
Fisher (1964) (Genera l)	1 - strong swimmers 0.6 - 0.75 (pink, chum)		4-a		4 ft^3 fish				From Pool Space	From Pool Space	2(min)	
Ziemer (General)	0.75-l	= pool cross sectional area	3-8 1(resting)	0.5-1	4 ft^3 fish		1.0	0.83	10xHp	2.5xHp	3xHp	
Sakowicz (1962) (General)	1.3-1.6 (salmon)	35	9(max)			2.6	1.6	1.6	16.4	9.0	2.6	
Rizzo (1969) (Type A)[b]	1	4 $\frac{ft\text{-}lbs}{sec\ ft^3}$	3-H	1					14-18	10-13	6.5	Rectangular
Bell (1973)[b] (Type A)	1(salmon) .75(shad)	4. $\frac{ft\text{-}lbs}{sec\ ft^3}$	2-8 fos	1(salmon) .5(trout)	0.2 ft^3 lb fish	8/2	1.5	1.25	8-20	6-20	6	Rectangular

NOTES: a) Test fish from Iowa River (species: carp. shad, quillback, catfish, herring, perch, and buffalo fish)

b) Ice Harbor Type

Q = Flow; V = Velocity
For definition of ter

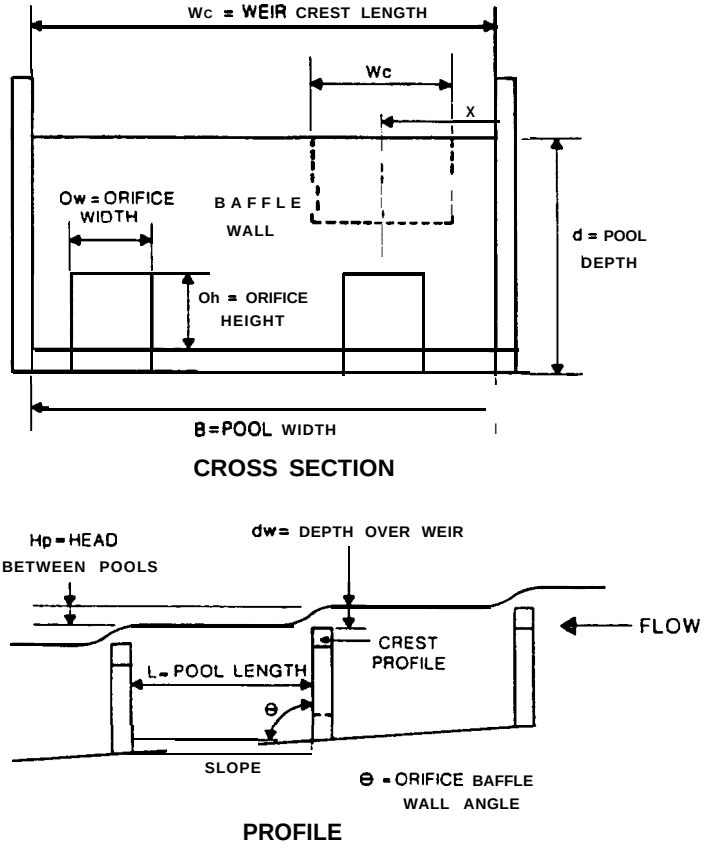

Fig. 10. Nomenclature for Table 8.

obtained from the literature written between 1934 and 1984 for weir, port and pool fishladders. The terms are defined in Fig. 10, and are discussed further in Part 3 of the main report.

Capabilities of Fish and Controlling Conditions

Fish are intimately tied, throughout their life cycles, to their relationships with water velocities, and their velocities relative to that of the water. Therefore a section of this report is devoted to these interrelationships and their applications to the design and modification of fishways.

A summary of the life-term relationships between fish and velocity is displayed in Fig. 11. Because fishways are associated with the upstream migration life phase, this part of Fig. 11 is emphasized . The factors which influence the swimming and leaping capabilities of fish were listed in Table 3 and are repeated here in Table 9 for easy reference.

Details of fish swimming capabilities for Pacific Northwest species and Atlantic Salmon are presented in Table 10. Note the different classifications of fish speeds. We have chosen to use the more modern and physically descriptive terminology published by Hoar and Randall (1978).

Sustained - normal functions without fatigue;
Prolonged - activities lasting 15-20 seconds to 200 minutes which results in fatigue; and
Burst - activities which cause fatigue within-15-20 seconds or less

Swimming modes, homing and energetics (the swimming efficiency or hydrodynamic advantage of fish) lead to a discussion of the basic equations of fluid mechanics which have applications in fisheries engineering.

Locomotion and Hydrodynamics

A brief history of the study of fish locomotion is presented in Table 11. After the salmonid swimming modes are examined, the basic equations of fluid mechanics are discussed in terms of their applications to fisheries engineering problems. The equations are summarized in Table 12.

A Conceptual, Analytical Model of the Energy Requirements of Ascending Fish

A logical development is to combine the hydrodynamics of fishway flow conditions with fish capabilities, and to analyze the relative amounts of energy expended by fish as they move through fishways by:

1) leaping;
2) swimming through ports; and
3) swimming up a chute.

Table 9. Factors which influence the swimming and leaping capabilities of fish.

Factor	Influence	Reference
Species of fish	Variable	Bell (1973) Jones et al. (1974)
Stock of fish	Variable	Vincent (1960)
Size of fish	Increased capabilities with increased size	Fry and Cox (1970) Brett and Glass (1973)
Time in the river (Sexual maturity, condition)	Reduction in capabilities with time	Idler and Clemens (1959) Sakowicz and Zarnecki (1962)
Site Geometry, , Hydraulics	Optimal conditions exist which promote successful leaping	Stuart (1962) Webster (1965)
Temperature of water	Optimum range exists, above or below performance reduced	Brett et al. (1958) Griffiths and Alderdice (1972)
Lighting	More successful leaping under certain lighting conditions	Stuart (1962)

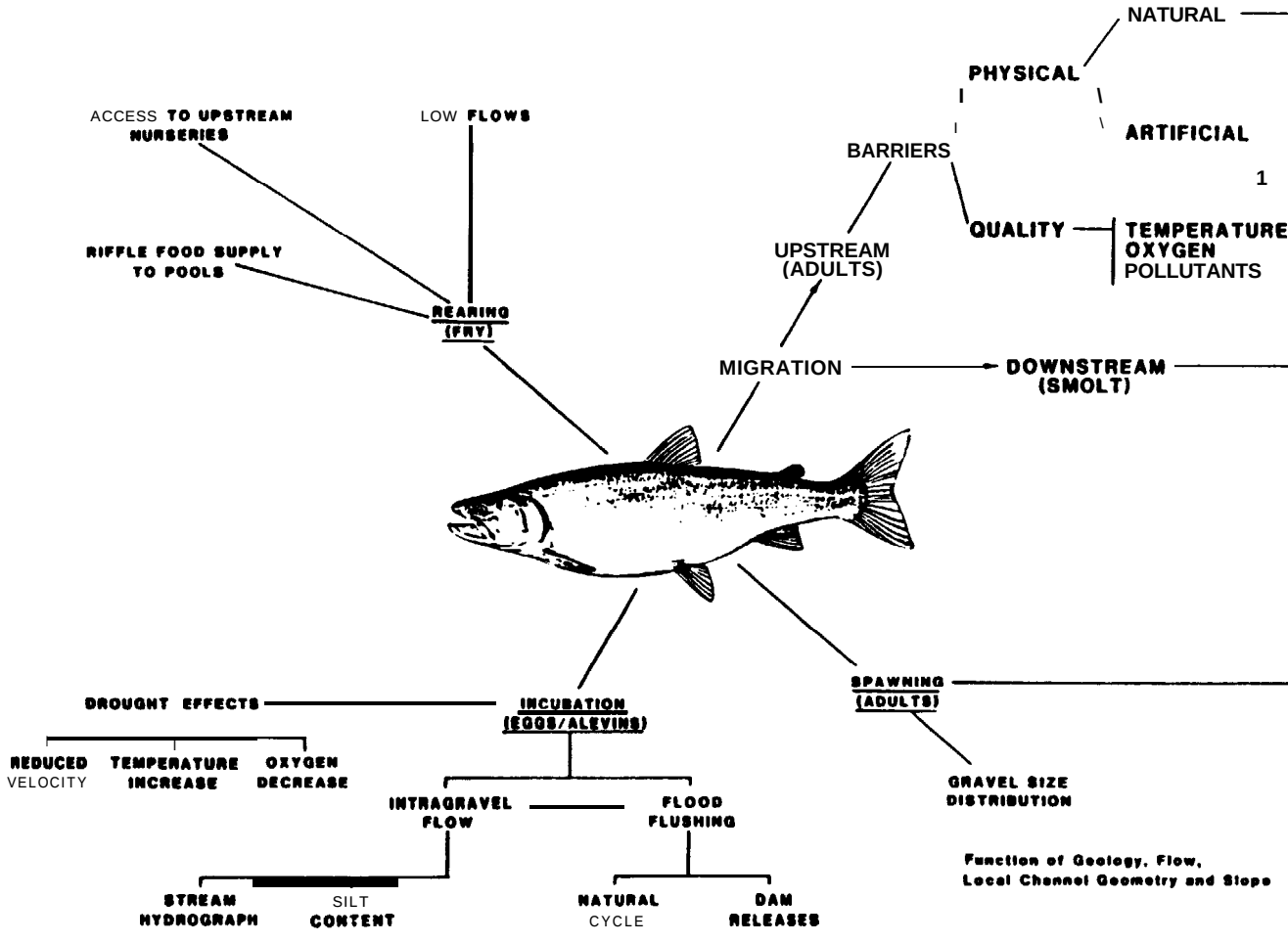

Fig. 11. Velocity relationships in life phases of a fish.

Table 10. Nomfnaf upper limits of sustained, profongad, and burst speeds of adult fish.

Species	Upper Speed for (1) Cruising (2) (Sustained) (fps)	Sustained (Prolonged) (fps)	Darting (Burst) (fps)	Observed Maximum (fps)
Salmon				
Chinook	3.4	10.8	22.4	22.1
Chum	1.6e	5.20	10.68	----
Coho	3.4	10.6	21.5	17.5
Pink	1.80	5.6e	11.3e	----
Sockeye	3.2	10.2	20.6	----
Trout				
Cutthroat	2.0	6.4	13.6	13.5
Staafhead	4.6	13.7	28.6	26.8
Brown	2.2	6.2	12.7	12.8
Atfantfc Salmon	4.0e	12.0e	23.2e	26.5

Data prfmarffy from Bell (1973), Beamfsh (1978), and Dimeo (1977).
Row (1) - Cfaasfffcatfon of speed in Bell (1973).
Row (2) - Cfasrfffcatfon of speed in Hoar and Randall (1978).
e= estimated speeds from leap hefghts. Surtafned and prolonged speeds estfmated as ratfo of burst speed sfmflar to sockeye salmon. Burst speed of Atfantfc salmon estimated from leap height of 11 feet 4 inches (Calderwood, 1930).
Sustained and prolonged speeds estimated as ratfo of burst speed rfmffar to steefhead.

Table 11. Some Historical Highlights of the Study of Fish Locomotion from 600 B.C. - 1971 (after Webb, 1975)

Time	Events
600s B.C.	First reference to propulsive functionof the tail.
1680	G. A. Borelli compared movements of the caudal fin to an oar.
1873	J. B. Pettigrew observed shape of the propulsive wave.
1895	E. J. Marey used cinephotography to study locomotory kinematics of swimming fish.
1912	S. F. Houssay attempted to measure thrust and drag of fish.
1926	C. M. Breder summarized and classified types of propulsive movements in fish.
1933	Sir James Gray showed how propulsive movements generate thrust, and defined kinematic conditions required.
1936	Sir James Gray used hydrodynamic theory of drag for rigid bodies of revolution to calculate drag of a swimming dolphin. Compared with values for mammalian muscle power output. Insufficient power output was available to overcome the theoretically expected hydrodynamic drag--Gray's Paradox.
1938,1939	A. V. Hill used direct calorimetry to determine power characteristics for contracting vertebrate muscle.
1952	Sir Geoffrey Taylor used hydrofoil theory to formulate a quantitative hydrodynamic model for fish propulsion.
1961	R. Bainbridge used hydrodynamic theory for drag of rigid bodies of revolution as a model for the swimming drag. Drag was compared with the latest values for muscle power output. Gray's Paradox not supported for most fish.
	M. F. Orsborne used the same hydrodynamic theory, and compared drag of migrating salmon with. power expended, as determined by indirect calorimetry. Insufficient power was available to overcome hydrodynamic drag.
1960-1963	New respirometers developed by P. Blazka et al. and J. R. Brett permitted accurate measurement of power available to a swimming fish using methods of indirect calorimetry.
1963	J. R. Brett compared power available to a cruising salmon (calculated by indirect calorimetry) with drag measured on a dead fish, and found insufficient power available to meet the drag.
1960-1971	Sir James Lighthill developed hydromechanical models of fish propulsion, covering full range of caudal fin propulsion types. These were the first models of practical biological use having deductive and inductive values.

TABLE 12. Summary of Equations Used in the Analysis of Fish and Velocity Relationships

Component	Equation	Applications	Deffnition of Terms (Ofmensions: Force; Length; Time; Mass)
(1) Water Viscous Forces	$\tau = \mu du/dy$	Viscous forces, Reynolds stresses, boundary shear stress, sediment transport, velocity profile.	τ = shear stress (force/unit area), (F/L^2) μ = viscosity (FT'L2) u = local velocity (L/T) at depth. y
(2) Boundary Shear Stress	$\tau_o = \gamma R S_e$	Gravel size in spawning area. (see note after 6 re: S_e).	γ = specific wefght of water (F/L^3) R = hydraulic radius of channel (L) S_e = slope of energy gradient (L/L)
(3) Energy Relationships	Bernoulli Equation $y + V^2/2g + Z = C$	Energy loss in flow; changes in depth, pressure, kinetic energy and position.	y = depth (L) V = mean'velocity over depth (y), (L/T) Z = potential (position) energy about datum (LF/F)
(4) Specific Energy	$E_s = y + V^2/2g$ Measured above stream bed.	Determining state of flow, whether flow is deep and slow moving (subcritical velocity) or fast and shallow (supercritical).	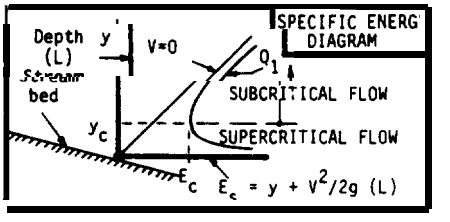
(5) Continuity or Flow	$Q = AV$ $Q = A_1V_1 = A_2V_2$..	Used in conjunction with energy equation to calculate water surface profiles, stage-discharge relations, etc.	Q = flow rate (L^3/T) A = cross-sectional area of channel (L^2) V = mean velocity of flow (L/T)
(6) Manning's Equation	$v = (1.49/n)R^{2/3}S_e^{1/2}$	To determine mean velocity based on characteristics of channel.	n = empirical roughness coefficient S_e = slope of energy grade line from Bernoulli Equation

NOTE: The slope of the channel bed (S_b) represents the rate of change (gradient) of the potential energy of the flow above some datum, or the gravitational attraction acting on the flow. Uhen water surface slope (S_w) is parallel to the slope of the channel bed (S_b) they are equal to the slope of the energy gradient (S_e), and the flow is classified as uniform, normal flow which rarely occurs in natural. irregular channels, except on flatter gradients with fine-grained bed materials.

(7) Velocity Profile	For local velocfty: $u/u_* = 5.75(\log y/k) + 8.5$ For mean stream velocity $V/u_* = 5.75(\log Y_o/k) + 6.0$	Determine velocity agafnst which ffsh must swim near streambed. related to size of bed material, roughness.	ρ = unit mass density (M/L^3) u_* = shear stress velocity $\sqrt{\tau_o/\rho}$ (L/T) k = height of dominant bed material (L) y_o = mean depth of flow (L)
(8) Drag Forces	Wake drag: $Fw = C_w \rho A_p V^2/2$ Skin (friction) drag: $F_f = C_f \rho A_s V^2/2$ Total drag: $F_t = C_t \rho A_s V^2/2$	Calculate resistance force in velocity field (such as in culvert flow) to fish movement upstream; estimate species abilfty to traverse high velocity regions.	F_w = wake force (F). pressure C_w = wake drag coefficient A_p = frontal projected area of fish (L^2) C_f = friction drag coefficient A_s = surface area of fish (L^2) C_t = total drag coefficient
(9) Power Requfred	$P = V(F_t)$	Fish power necessary to propel ffsh at a mean velocity. V.	P = (LF/T)
(10) Momentum Force	$F_m = \rho Q(V_2 - V_1)$	Attraction of fish by flows. impact force of jets. impact force of fish striking objects.	F_m = momentum force (F) V_2 = second velocity condition V_1 = initial velocity condition V_1 and V_2 are in the same direction.

The upper limits of fish capabilities have not been adequately measured, due in part to the fact that the fish become tired while building up to their maximum speeds in test apparatus. At the Bonneville Fisheries - Engineering laboratory one steelhead was allowed to ascend and descend the test fishway and return chute without interference--it climbed a total of about 6,400 ft. vertically before the observations were terminated.

The results of the energy expenditure analysis are presented in Table 13. In addition, a summary is presented in Table 14 of the maximum heights to which some salmon and trout can leap based on the bio-mechanical analysis in Report No. 2 of this project (New Concepts in Fishway Design).

Attraction Velocity at Fishway Entrances

Our survey of current design practice and personal interviews led to the fact that attraction velocity must be considered in light of the following guidelines:

(1) the orientation of the jet should be towards the area where fish tend to school (base of falls, downstream of spillway, etc.);
(2) the attraction velocity should be about 8-12 fps which is a function of the size of the fishway attraction opening and the amount of attraction flow;
(3) each site should be analyzed according to its special geometric, flow and fisheries characteristics.

Beyond that there is very little information available on design criteria for the velocity and amount of the attraction velocity required to lure fish into a fishway. The only set of published data available was reported by Collins and Elling (1960). Parallel channel tests were run at the Bonneville Fisheries - Engineering Laboratory which offered migrating fish from the Columbia River their choice between two different velocities. The velocities ranged from about 3 to 13 fps in various combinations. A statistical analysis of the data by the authors showed that only when the higher to lower velocity ratios were 3:1 or larger would a significant number of fish (steelhead, chinook and coho) choose the higher velocity. Considering that the strenyth and persistence of a jet used to attract fish is a function of the jet shape and the momentum in the flow (velocity times discharge or velocity squared times flow area) we evaluated the test velocity combinations from Collins and Elling (1960). The final results of this analysis are shown in Table 15 and Fig. 12. The "Fish Attraction Factor" (FAF) consists of the differences in the squares of the two velocities divided by the average of the two velocities squared. It represents the two important factors in attraction flow:

(1) the difference in the momentum of the two parallel jets; and
(2) the level of jet intensity as defined by their average velocity squared.

These results could be analyzed further in terms of different angles of coalescence of the two jets by merely applying fluid mechanics principles.

Table 13. Summary - Energy Requirements of a Four-Pound Ascending Fish

Elevation Difference	Swim Through Ports	Swim Up a Ramp (Table 4)			Leapin	
		1/100	1/10	1/1	From Level Pool	
AH						
ft	ft-lb	ft-lb	ft-lb	ft-lb	ft-lb	
1	7.2	50.3	13.0	1.6	5.3	
2	14.4	121 .o	44.0	6.1	10.7	
3	21.7				16 .0	
4	28.9	264.0	134.4	23.5	21.3	
5	36.1				26.7	
6	43.3	413.4	250.0	38.6	32.0	

Table 14, Leap heights from a still pool calculated from burst velocities for several species of salmonids.

Species	Burst Velocity (fps)	Weight (lbs)	Length (ft)	Frontal Area (ft^2)	Drag Coefficient[1]	Leap Height (ft)
Salmon						
Chum	10.6	10.0	2.5	0.51	0.06	3.3
Pink	11.3	6.5	2.3	0.31	0.06	3.8
Sockeye	20.6	7.0	2.4	0.37	0.06	9.2
Coho	21.5		[illegible]	0.37	0.06	9.9
Chinook	22.4	20:0	2.8	0.58	0.06	10.0
Trout						
Steelhead	26.5	18.0	3.1	0.51	0.06	13.8
Cutthroat	13.5	2.2	1.4	0.13	0.06	3.8

[1]The drag coefficient for symmetrical airfoils is not sensitive for aspect ratios within the range from 4 to 5.5 at a Reynolds number of $4(10)^5$ (Daily and Harleman, 1966).

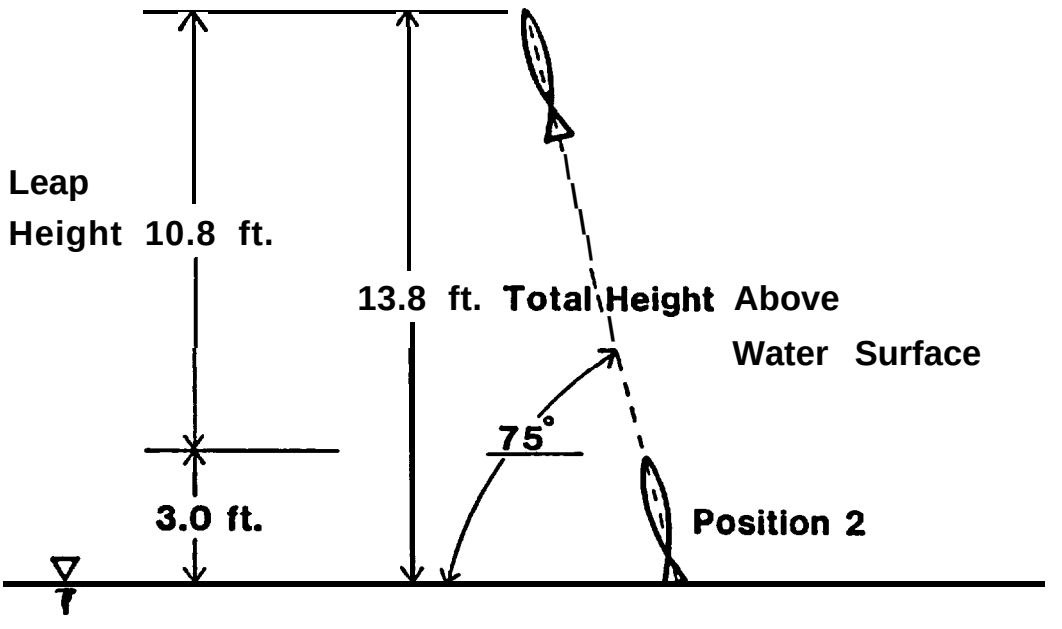

Leaping from a Still Pool
(Definition Sketch for the above table)

Table 15. Data Reduction and Velocity Combinations for Analyzing the Selection of the Channel by Silver and Chinook Salmon and Steelhead Trout Using the Momentum Between Two Attraction Flows and Their Average Momentum

Test Condition		Percent of Choosing Higher Velocity					VELOCITY COMB Momentum Difference	Average Momentum
V1 (f/s)	V2 (f/s)	Silver* (%)	Chinook (%)	Steelhead (%)	$V1^2$	$V2^2$	$(V1^2-V2^2)$	$[\frac{1}{2}(V1+V2)$
8.00	2.00	83	93	79	64.00	4.00	60.00	25.00
8.00[a]	4.00	86	68	59	64.00	16.00	48.00	36.00
8.00	6.00	46	45	52	64.00	36.00	28.00	49.00
6.00	2.00	83	87	73	36.00	4.00	32.00	16.00
6.00	4.00	68	62	64	36.00	16.00	20.00	25.00
4.00	2.00	100	73	67	16.00	4.00	12.00	9.00
Special tests:								
12.89	2.69	--	90	76	166.20	7.24	158.96	60.68

*Name used by Collins and Elling (1961) for coho.

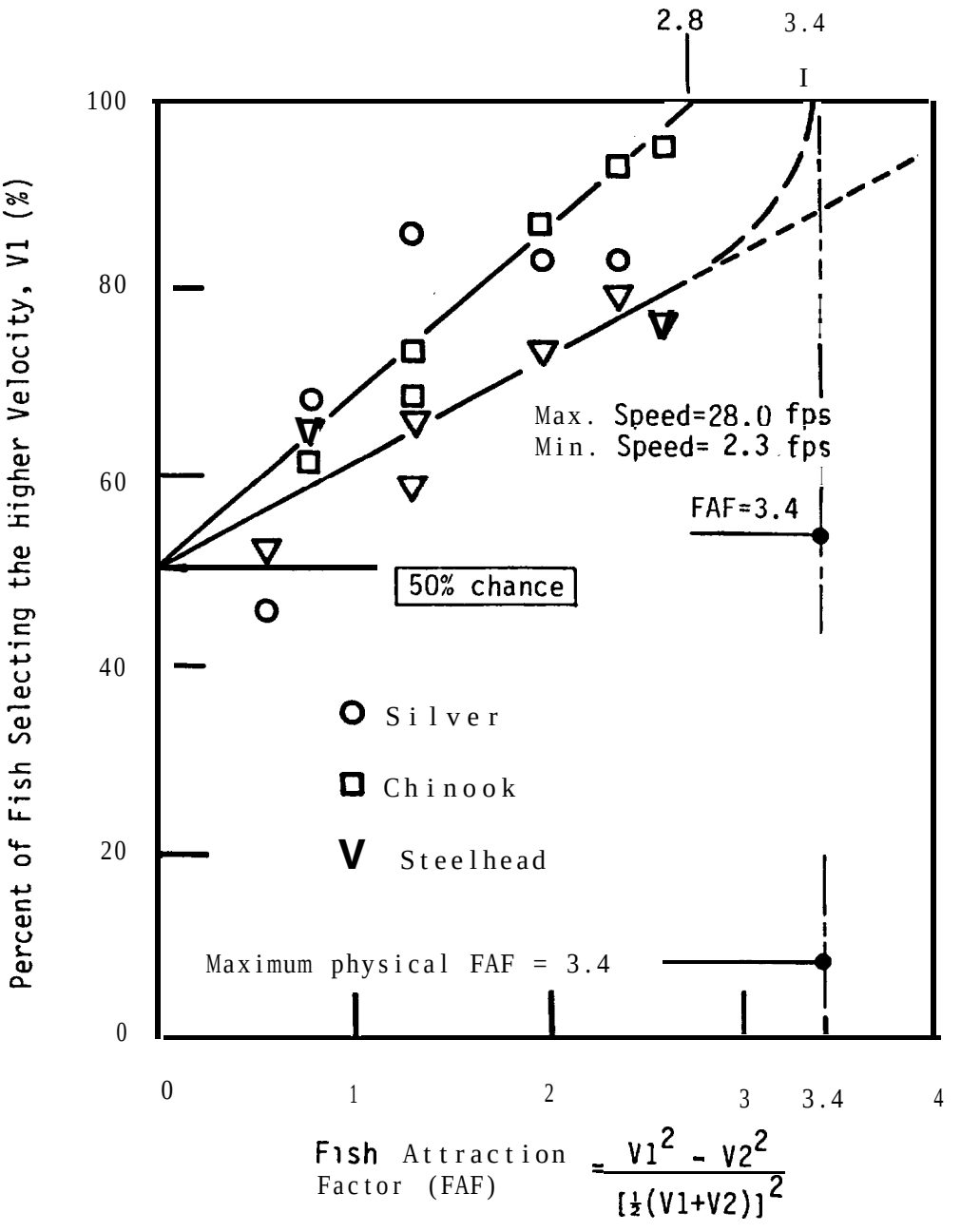

Fig. 12. Choice of higher velocities by upstream migrating salmon and steelhead related to momentum level in the attraction flows as defined by the momentum difference divided by the average momentum in the two jets.

The Roles of Stimulus, Response, and Stress in the Design of Fish Passage Structures

Two primary considerations need to be addressed when discussinq fish passage structures. One is the biology of the fish and how the fish's adaptations prepare it for obstacles encountered during the spawninq run. Secondly, if a fish passage structure is to aid upstream miqration, it should do so without causing additional stressing factors to the upstream movements of the fish.

Hoar (1958) addresses the first concern and categorizes the fish, its environment and how it deals with that environment into a series of stimuli and responses. Responses may be physioloqical or behavioral with behavior defined by Tinbergen (1951) as the "total movements of the intact animal." An etholoqical aooroach (i.e., objective analysis) to fish behavior will be used and explanations of behavior may be in terms of immediate cause-effect relations, or evolutionary adaptations.

Hoar (1958) describes behavior as a series of fixed stereotyped movements. These movements can be the result of a specific internal physioloqical state or in response to definite factors (termed "releasers") from the external environment. Normally, there is a steering or orientinq component to the movement. The term "appetitive behavior" refers to extended activity which frequently precedes the goal situation. This behavior may be described as an "urge" or "appetite".

Three major levels of movements can be described:

1. drive--"the complex of internal and external states and stimuli leading to a qiven behavior (Thorpe, 1951; Baerends, 1957, as cited in Hoar, 1958);
2. appetitive behavior;
3. the consummatory act.

The series of behavioral movements is set in motion by what Hoar terms "specific releasers" and they are then quided by conditions in the environment. Rehavior is a very plastic phenomenon and, dependinq on circumstances, may not proceed directly from the drive to the consummatory act. Various factors are responsible for the plasticity of instinctive behavior:

1. The intensity of movements may vary in relation to the amount of information received;
2. releaser information is sometimes received throuqh more than one sensory channel; and
3. there may be a change in the intensity of internal motivation.

When two incompatible instincts are simultaneously aroused, or when the normal releaser disappears before the behavior pattern is completed, inappropriate, illogical behavior patterns may result. These are termed "displacement activities." If a strong disturbance occurs, the behavior might reqress back to an earlier staqe in the hierarchical organization. This condition is known as "fall back."

Within this context, the behavior of a fish negotiatinq fish passaqe structures will be discussed, including specific stimulatory or inhibitory factors which should be minimized in the design of passage structures.

Table 16 lists various passaqe structure and environmental components which contribute to the bio-hydraulic conditions present in a fish pass. Also listed are factors which could be considered stimuli, inhibitors, and stressors.

Table 16. Structural and Environmental Passage Conditions.

Items	Passage Conditions
Variables Contrfbutln to Hydraulfc Condftfons 3n a Fish Passage Structure	1. Water a. Flow b. Velocity c. Turbulence d. Momentum e. Entrafned Air f. Temperature g. Chemistry
	2. Passa e Opening(Weir, Port, Channel, Slot) a. Di3ference in pool elevatfon b. Wfdth c. Type of opening d. Jet geometry e. Flow control
	3. Lower Pool a. Depth b. Bad contours c. Standing wave geometry (for weir) d. Entrained air e. Volume of chamber f. Baffles or other structures
External Stimuli	1. Sense standfng wave (for weir) 2. Location for standing wave 3. Attraction flow 4. Visual perception 5. Color 6. Boundaries 7. Streamlfnfng flow downstream
Internal Stimuli	1. Temperature Light 3: Season
Inhibitory Factors	1. Delay 2. Lack of sufficient flow for continued movement 3. Excessive flow 4. Temperature barriers 5. Air bubbles
"Undue" Stress Sources	1. Mechanical damage 2. Hyperactfvfty 3. Temperature 4. Water quality 5. Delay 6. Crowding 7. Disease

Design Survey

Besides sending a questionnaire on fishway design practice to some 30 individuals, agencies and firms around the world, we interviewed 25 people from state and federal agencies and from consulting firms in Oregon, Washington, and British Columbia. Numerous individuals were interviewed on a less formal basis regarding fishway design through telephone conversations, chance meetings and letters based on the contacts made through the formal surveys and interviews. An additional survey was sent to 30 persons (8 responses) prior to initiation of the project with questions about fish leaping observations.

The responses to major design questions and philosophies are presented in the body of Report No. 3. In general one can say that:

(1) if someone were to build a fishway today, those who would repeat past designs are those who have had good experiences with them, and vice versa;
(2) others are still experimenting with designs;
(3) some have no fishway attraction problems and other do; and
(4) there was a great variety in the successful designs which were used for species with similar swimming capabilities.

Construction Considerations

All during the project the importance of using practical construction methods for the fabrication of any new fishway design was foremost in our thinking. This began with the construction of our large fishway chamber in the laboratory (6'0 x 8'W x 12'L). The chamber could be narrowed or made shallower or shortened and had a Plexiglas viewing window 8 feet long on one wall. Researchers could actually enter the tank to observe and measure flow conditions first hand.

When the large-tank test program was completed, the materials were recycled into the construction of three smaller weir and pool chambers for standing wave tests at a smaller scale. When tests were run at the Johns Creek hatchery near Shelton our weirs, baffles, chutes, and stop logs were ail prefabricated in Pullman to fit the stop log slots in the Johns Creek fishway. The stop logs were prefabricated to various depths to allow the largest variety possible of ladder step heights within the limitations of the fishway channel slope and depth. Carrying these construction steps further into the more applied field (and assuming adequate foundations), we discussed with designers and fabricators such options as:

(1) cutting large (8 foot diameter) fiberglass or corrugated metal pipes horizontally to form fishladder units; the weir plates at the ends of the sections would be designed to connect two units at a fix drop in elevation;
(2) using sandwich materials (fiberglass layers over plywood) to prefabricate tanks, weirs and baffles as a unit with external flanges to set the drop in elevation between tanks; and
(3) prefabrication of units of steel or aluminum similar to those in part (2).

Whenever excavation through rock would be required, the unitized construction would have a definite advantage over concrete in that the rock would not have to be over-excavated for concrete forms. Also, repair and maintenance could be done quite simply with fiberglass, welding, or replacement of the damaged unit(s).

We did not go into detailed cost comparisons, but assuming common costs for site preparation, and adequate foundations, the use of prefabricated units most certainly would be less expensive than concrete. Considering total construction and operating costs, and special construction requirements, concrete will be the best material to use in certain environments and special site conditions. But, as in the case of conservative biological design of fishways, there is ample room for creativity in the structural design of fishways. Some designers and fabricators are already applying some of these concepts such as for the adjustable, precast concrete, V-shaped fishway at the Lake Oahe hatchers in South Dakota (Donahue, 1983). Modular construction of the new weir and pool fishway is discussed in Appendix II of Report No. 3 as summarized below. (See Truebe and Drooker, 1981 for more modular concepts.)

Appendix I - Bibliography

This report on an "Assessment of Fishway Design" contains a bibliography on numerous subjects related to the bio-mechanics of fishway design. It includes not only the references we have cited in all four parts of the report, but numerous other references which could be of use to other researchers and designers, biologists and engineers, field people and program managers.

Appendix I I

This appendix is included in the assessment report to provide fundamental information for persons who may be interested in how the new "waterfall" weir and pool fishway was developed. Concepts, weir test results, observations on energy dissipation and the evolution of the weir part of the new fish ladder unit are presented. It is presented also in Part 2 of the project report.

ANALYSIS OF BARRIERS TO UPSTREAM MIGRATION

(Report No. 4 by Patrick D. Powers and John F. Orsborn)

Introduction

Upstream migration at waterfalls is receiving increased attention where significant amounts of habitat are available above the falls. On the other hand, roads being constructed across streams in similar remote areas require the installation of culverts and bridges. Although bridges or open arch culverts are preferable because they leave the natural stream bottom, sometimes their cost cannot be justified and standard culverts must be used. Unless the culvert is carefully designed to consider upstream fish migration required (anadromous, resident, adult and/or young) it can become as effective a barrier as the waterfall.

Much has been written about culverts as barriers; new culvert barriers are beinq avoided and old culvert barriers are beinq corrected. The hydraulic characteristics of waterwalls, high velocity rock chutes and culverts are very similar. But the details of these hydraulic and geometric similarities have not been set down in a systematic method or classification. This report covers that systematic classification and provides the basis for further improvements in the analysis and modification of waterfalls and culverts which are barriers to upstream migration.

Types of Barriers

When adult salmon and steelhead trout enter freshwater, they stop feeding and rely on energy reserves stored in body fat and protein to carry them through migration and spawning. The rate of sexual maturity is established by heredity, and cannot adjust to delay. Barriers which cause excessive delay and abnormal enerqy expenditures can result in mortality either during the migration or in the spawning areas. These barriers can be natural or artificial, as well as physical, chemical or thermal. Natural physical barriers consist mainly of waterfalls and debris jams, and artificial physical barriers consist mainly of dams, culverts and log jams. This study will consider only those barriers consistinq of waterfalls or culverts that partially or totally obstruct salmon and trout upstream migration. In addition to existinq barriers which delay or totally block upstream migration, spawninq areas which were originally accessible have become inundated by reservoirs and other instream modifications. Therefore, existing barriers must be modified to further open the "window of passage" to spawning areas.

The potential for derivinq benefits from alleviating barriers to miqration is hiqh, but in the remote areas where these barriers usually exist, the cost of traditional fish ladders and construction methods usually outweigh the benefits to be gained. Some barriers lend themselves to simple solutions

such as blasting a series of pools to assist fish passage. But in many cases an analysis of the geometric, geologic, hydrologic and hydraulic characteristics needs to be made so that alternative solutions can be generated and compared. Stuart (1964) suggests that the behavior of migrating salmonids can be correlated directly with the hydraulic conditions in the stream channel. This relationship was the basis for this study,

Because stream flows and site geometry control stream width, depth and velocity, the hydraulic parameters are a function of the geomorphic and hydrologic parameters. Given the geomorphic conditions at a s'ite, considered to be constant, and the hydrologic conditions which are variable within a range of values, an analysis of the hydraulic conditions related to fish capabilities can determine the impact the barrier has on fish passage success. These relationships can be seen in the flow chart in Fig. 13.

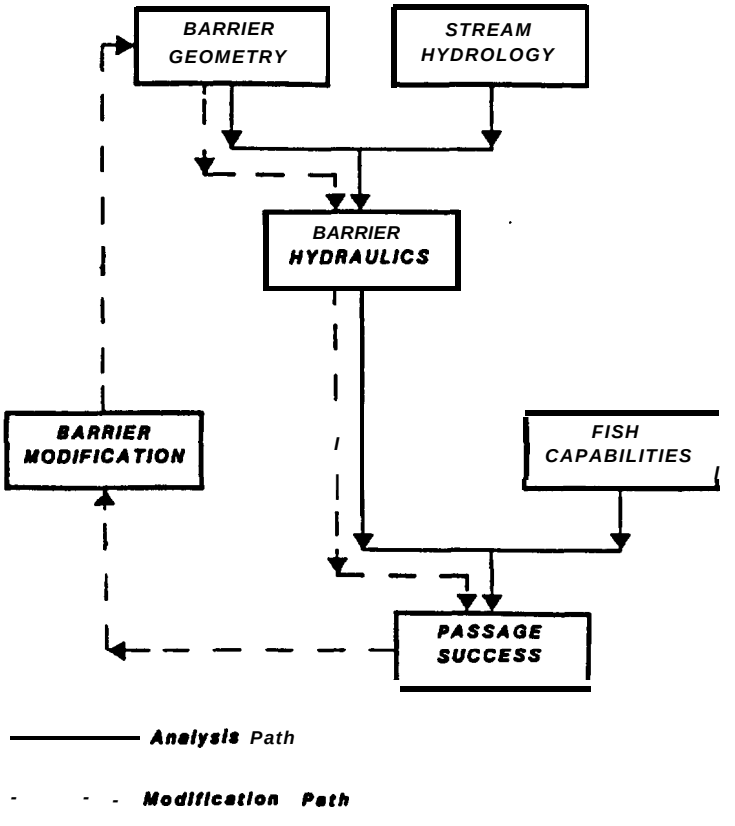

Fig. 13. Flow chart for analysis of barriers.

The objectives of this study were to:

1. Develop a classification system for waterfall and culvert barriers;

2. Develop methods for analyzing barriers by usinq site qeometry, hydroloqy and hydraulics, and by relating the hydraulics to fish capabilities; and

3. Generate "parameter specific" solutions to assist fish past barriers without the installation of a typical fishway.

It is not within the scope of this study to develop analytical methods for more complex barrier structures but to develop the conceptual basis for these methods. Complex barrier analysis would require extensive field and/or physical model testinq. It is the authors' intention to use this study as a foundation to further develop analytical methods for analyzing more complex barrier systems.

Geometric and Hydraulic Conditions and Similarities of Barriers

Because of the wide variations in the forms of barriers, a classification system is required to facilitate the analysis and subsequent generation of solutions to fish passage problems. Evidence of waterfall classification in the literature points only to a system based on qenetic qrounds (Fairbridqe, 1968). The writers are not aware of a systematic classification system of waterfalls which correlates fish passage success. The requirements for an adequate classification system include the following:

1. site geometry,
2. hydraulic conditions, and
3. fish passage success.

Based on these three factors a classification system for waterfall or culvert barriers was developed to aide in assessing, analyzinq, and modifying barriers.

Natural rock barriers can be in the form of falls, chutes or cascades. Falls which are characteristic of steep (commonly vertical) overflow sections where the impact of the falling water scours a deep plunqe pool at the foot of the falls. Falls form elevation barriers where the difference in water surface elevation between the upstream water surface and the plunge pool, and/or the horizontal distance from the falls crest to the plunge pool, exceeds the leaping capabilities of the pertinent fish species. Often the leaping efficiency of the fish is constrained by unfavorable plunge pool conditions. If the pool is shallow, the falling water will strike the bottom creating violent pool conditions, thus affecting the fishes' orientation for leaping. Even if a fish has successfully leaped a falls, it can be swept back due to high velocities and/or shallow depths above the falls crest. A

cantilevered culvert outfall, where the fish must leap to enter the culvert, is similar geometrically to a fall. The only differences are in the nature and geometry of the bed over which the water flows.

Chutes are characterized by steep, sloping, rouqh open channels, offering the fish a high velocity medium in which to swim without resting areas. Chutes form velocity barriers where the water velocity near the downstream entrance to the chute exceeds the fishes' swimming speed. Often a standinq wave will develop at the foot of the chute. If the downstream plunqe pool is shallow, the standing wave may form too far downstream for the fish to rest before bursting into the chute. Even if the velocities down in the chute are within the fishes' swimming speed, the depth of flow and slope lenqth could prohibit passaqe. Also, chutes often pass a bulked mass of water and entrained air which offers a poor medium for swimming. Stuart (1964) suggested that when flowing water entrains air, the density of the mixture will be reduced and will detract from the propulsive power of the fishes' tail and diminish the buoyancy of the fish. Air entrainment does reduce the stimulus of attraction flows. Chutes with steep slopes are very similar to culverts where the fish must swim a lonq slope. The difference again is in the nature of the bed over which the water flows, and the shape of the flow area. Culverts do not offer an irregular natural boundary which can provide an occasional restinq place.

Cascades are characterized by a reach of stream where large instrearn roughness elements, such as boulders and jutting rocks, obstruct and/or churn the flow into violently turbulent white water. Cascades often present fish with high velocities, excessive turbulence, and orientation difficulties which make it impossible for a fish to effectively use all its swimming power. If the roughness elements (or boulders) are large, they will often create periodic resting areas within the cascading reach. Jackson (1950) noted that the sockeye salmon trying to pass Hell's Gate on the Fraser River almost succeeded in "eroding their noses back to their eye sockets" by contact with the bank while trying to maintain equilibrium in the turbulent water.

Pioneering work in the field of analyzing waterfall barriers has been conducted mostly by fisheries bioloqists through methods such as field sampling by electrofishinq, skin divinq or just personal observation of fish passage. No significant research concerning the fluid mechanics of waterfalls has been conducted. There has been considerable work done on culverts to develop depth, velocity and discharge relationships, as reported by Dane (1978), Evans and Johnston (1980) and others. The obstruction at Hell's Gate focused a considerable amount of attention on the velocities and turbulence that sockeye salmon were facing. In that study, river velocities were measured by two methods:

1. The highest average velocities from the river discharge and the area of smallest cross section; and

2. Average mid-stream surface velocities using a float.

Highest average velocities ranqed from 12.9 to 17.5 fps, but Jackson (1950) noted that these computed velocities were inaccurate because of the extremely rough channels at Hell's Gate. The conclusion was that the combination of turbulence and high velocities prevented the passage of large runs of sockeye salmon.

Clay (1961) suqqests that the following engineering field work is required before design and construction of a fishway at a fall can be initiated:

1. Topographic surveys;

2. Record magnitude, direction and location of velocities;

3. Locate points of turbulence, upwellinqs and the intensity and location of points of surge and how they relate to fish behavior; and

4. River discharge measurements at several levels of flow.

Clay suqqests also various types of fishways that can be installed at natural obstructions. He notes that because of the wide range of flows at a natural obstruction, the vertical slot type of fishway should be used because it can accept a wide range of water level fluctuations while still working effectively.

Most of the design work on assistinq fish past waterfalls without the installation of a fishway rests in project files. Many of these waterfalls were observed to be barriers due to shallow depths, high velocities and/or elevation drops, and were modified by blasting to try to reduce the magnitude of these constraints to passaqe. This study developed detailed analysis procedures to qenerate "parameter specific" solutions to the "real passage problems" at barriers.

Summary of Classification of Barriers

Evidence of classification for waterfalls in the literature was found only in terms of the site geomorphology (or origin of formation) (Fairbridqe, 1968). No classification of waterfalls could be found in the literature that correlated site hydraulics or fish passage success to geometry. Pryce-Tannatt (1938) notes, "Obstructions are many and varied. It would be useless to attempt to classify them beyond distinguishing between the comparatively mild, the definitely difficult, and the completely impossible." Dane (1978) suqqested a classification of obstructions for culvert barriers based on blockage as follows:

1. Total: impassable to all fish all of the time;
2. Partial: impassable to some fish all of the time; and

3. Temporary: impassable to all fish some of the time.

The classification system developed for this study analyzed the site geometry and hydraulics, and how they interrelate to fish passage success. Because waterfalls consist of such a wide range of geologic and hydrologic combinations, a classification system for waterfalls should include several components, each of which describes waterfalls differently. The classification system consists of four components: (1) class, (2) type, (3) magnitude, and (4) discharge, extending from general to specific (Table 17).

Table 17. Characteristics of Barrier Classification Components

Classification Component	Characteristics
Class	Site geometry in plan view. Flow patterns Number of fish passage routes. Characteristics of fish passage routes.
Type	Site geometry in profile. Bed slopes Pool depths
Magnitude	Elevation drops Water velocities Slope lengths
Discharge	The flow rate at which the class, type and/or magnitude were measured.

Class describes the flow patterns, number and characteristics of fish passage routes and site geometry in plan view. The class is determined by observing the characteristics in Table 17. Type describes the bed slopes, pool depths, and geometry of the barrier in lonqitudinal profile and therefore, requires an engineering survey of the barrier site. Magnitude describes the elevation differences, water velocities and slope lenqths the fish must negotiate. Because the class, type and maqnitude of the barrier will vary with discharge, the fourth item for classification will be to accurately estimate or measure the discharge at the time of observation.

Also, a degree of passage difficulty ratinq will be applied, based on a range from one to ten, one being the least difficult to pass and ten the most difficult. This is a subjective comparative rating of barrier class characteristics in reference to fish passage difficulty which is independent of barrier height and velocity. The ratinq is based on the following assumptions:

1. The differential elevation and water velocities are within the swimminq and leaping capabilities of the species in question;

2. At higher swimming speeds (>S fps) leapinq is more energetically efficient than swimminq (Blake, 1983);

3. Fish will be attracted to the area of highest momentum (flow x velocity) when migratinq upstream; therefore if multiple paths are present the fish may try to ascend the one with the highest attraction which will be created by the highest combination of drop, velocity, and discharge; and

4. Turbulent flow (or white water) with surges, boils and eddies make it difficult for fish to orientate themselves and make full use of their swimminq power.

Analysis of Fish Capabilities

In order to account for the condition (maturity towards spawning condition) of a fish, which affects its swimming ability, a "coefficient of fish condition" was developed (Cfc).

Based on a study of chum and coho in a high velocity chute at Johns Creek hatchery near Shelton, Washinqton, the coefficient was applied to the fish speeds as grouped in Table 18.

Table 18. Fish speeds of average size adult salmon and steelhead trout as reported by Bell (1984).

Specie	Fish Speed (fps) Sustained*	Prolonged*	Burst
Steelhead	0-4.6	4.6-13.7	13.7-26.5
Chinook	0-3.4	3.4-10.8	10.8-22.4
Coho	o-3.4	3.4-10.6	10.6-21.5
Sockeye	0-3.2	3.2-10.2	10.2-10.6
Pink and Chum**	0-2.6	2.6- 7.7	7.7-15.0

*Called cruising and sustained, respectively, in Bell (1984). Bell suggests that fish normally employ sustained speed for movement (such as migration), prolonqed speed for passaqe through difficult areas, and burst speed for feedinq or escape purposes.

**Pink and chum salmon values estimated from leap heiqhts of three to four feet at waterfalls.

The results of chute tests led to a new fishway design which is discussed in the last section of Report No. 4.

The "coefficient of fish condition" is based on the assumption that when Cfc = 0.50 corresponds to the upper limit of prolonqed speed given above in Table 18. Fish conditions corresponding to three values of Cfc are given in Table 19.

Next, the leaping capabilities of various species were calculated usinq the analysis developed by Aaserude (1984) as discussed in Part No. 2 of 4 of this project report. Using trajectory analysis and the fish condition factors, leaping paths were calculated for various salmon species and steelhead as shown in Fiq. 14. An example of the trajectory analysis applied to Eldorado Creek Falls in the Clearwater National Forest near Orofino, Idaho is shown in Fiq 15. This shows that only steelhead in the best condition could leap and land near the crest, and then swim over the top. Based on observations at the site, this is indeed the case. Usually the fish land about half to two-thirds of the way up the falls. This was the basis used to modify the falls to increase the downstream pool elevation with a rock berm, then blast a series of pools down one side (left, looking downstream) of the 30" face of the falls.

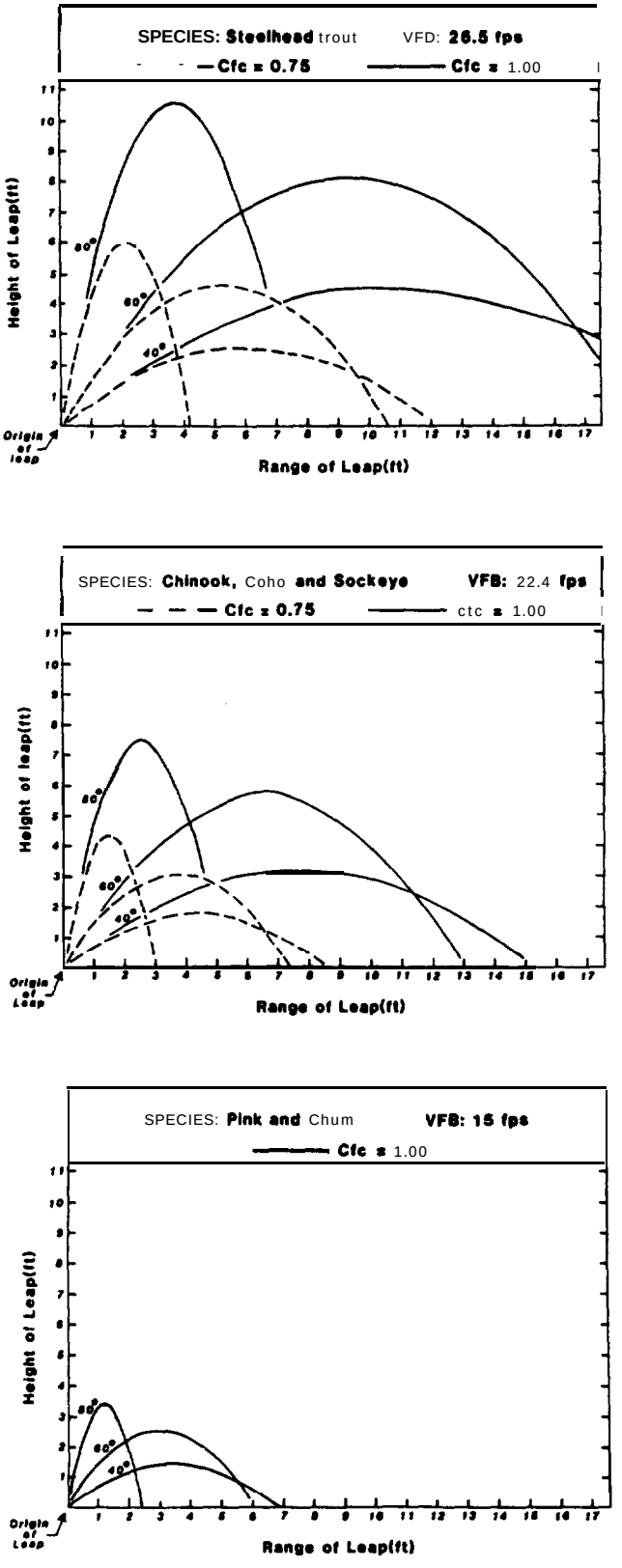

Fig. 14. Leaping Curves for Steelhead and Salmon

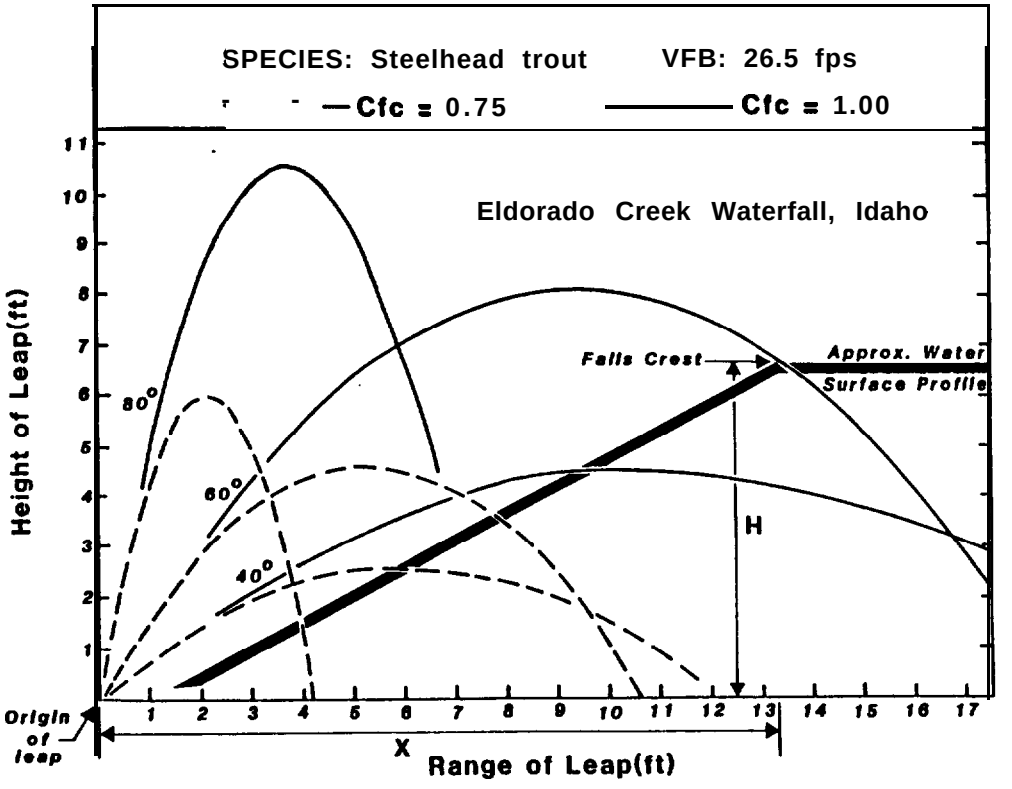

Fig, 15. Eldorado Creek waterfall superimposed on steelhead leaping curves.

Table 19. Coefficient of fish condition (C_{fc}). Values based on observations and data taken for coho and chum salmon at Johns Creek Fish Hatchery near Shelton, Washington, December, 1983.

Fish Condition	Coefficient(C_{fc})
Bright; fresh out of salt water or still a long distance from spawning grounds; spawning colors not yet developed	1 .00
Good; in the river for a short time; spawning colors apparent but not fully developed; still migrating upstream	0.75
Poor; in the river for a long time; full spawning colors developed and fully mature; very close to spawning grounds	0.50

A New Chute and Pool Fishway Development

During the testing of the new weir and pool fishway (Report Part No. 2) at John's Creek Hatchery, some tests were planned using smooth plywood chutes to develop performance curves for the coefficient of fish condition (Cfc). During the tests it was decided to apply some simple roughness strips (1.5 x 1.5 in.), six inches apart on the floor of the steepest smooth channel the fish could not neqotiate.

With the strips added, 100% of the chum salmon negotiated a 25% slope in an eight-foot long chute. What this indicates is that:

(1) The expensive, and sometimes danqerous, vanes on the floor and side walls of Denil and Alaska Steeppass fishways may not be necessary to pass fish up a chute fishway; and

(2) All that may be required is to roughen the flow, thus creating a more turbulent boundary layer with upstream eddy velocity components in the wakes of the roughness elements which assist the fish.

The benefits of such a "Chute and Pool" fishway are listed as conclusions in Table 20.

Conclusions from the Barrier Analysis Study

The quidelines for analyzing a waterfall or culvert barrier in this report are relatively simple. With the expertise of a fisheries biologist and a hydraulic enqineer these quidelines can be used effectively to resolve the dilemmas of fish passage problems at barriers. The followinq is a list of significant conclusions:

1. Unstable plunge pools disorient and reduce the fish's leap trajectory and height respectively;

2. Velocities and depths can be estimated for any irregular shaped falls crest as a function of the discharge at critical depth from:

$$Q^2/g = A^3/W$$

where Q = stream discharge, g = acceleration of gravity, A = cross sectional flow area, and W = top stream width;

3. Water surface profiles at barriers can be superimposed on fish leaping curves to analyze passage success. The optimum leaping angle can be estimated by:

$$\theta L = \tan^{-1} 3(H/X)$$

Table 20. Conclusions About New Chute and Pool Fishway

- REDUCED AIR ENTRAINMENT AND TURBULENCE
- BETTER ATTRACTION FLOW
- FISH SWIM TO PASS
- BETTER DEBRIS PASSAGE
- INEXPENSIVE
- SMALL FLOW (about 1/3 of slotted fishway)
- EASY TO ADD ATTRACTION FLOW WITH A FALSE FLOOR CONDUIT
- MORE TESTS NEEDED TO STATISTICALLY DEFINE OPERATING RANGES FOR MORE SPECIES

where H = the difference in water surface elevations, and X = horizontal distance from the standinq wave at the toe of the barrier to the crest of the falls or chute;

4. For rectangular and trianqular-shaped channels the hydraulic radius can be estimated as a function of the average width and depth with errors less than 5%; this allows for the mean velocity to be calculated in a simple manner.

5. For depths greater than two feet in corrugated metal pipe culverts, fish can swim in reduced velocities near the boundary where the velocity opposing the fish is less than the mean velocity by as much as 30%;

6. Stage-discharge relationships, when compared with migration season flows, will define hydraulic conditions at the barriers which the fish must negotiate; and

7. Simple chutes with only roughness elements (baffle strips) added to the floor will allow fish to negotiate the drop in water surface between two pools. The optimum qeometry for the baffles, and the limitations on this fishway for various species, are yet to be determined.

Suggestions for Further Study of Barriers

Further study of the followinq areas will increase the accuracy of analyzing and findinq solutions to fish passaqe problems.

1. Plunge pool: guidelines should be developed to accurately determine the plunge pool depth for the qiven barrier geometry and hydraulics which create optimum leaping conditions. Stuart's (1964) 1.25 ratio of pool depth to fall height does not fit all situations, but it is a qood general rule.

2. Fish speeds in an air-water mixture; there should be some reduction in the fish's burst speed in an air-water mixture because of the reduced water density. Calculations need to be made usinq a fish locomotion equation (Blake, 1983) to determine the reduction of the propulsive power of the fish's tail in a medium with reduced density. Correspondinq leapinq heiqhts and trajectories can then be calculated.

3. Leap success ratios: as the height of barrier increases, the number of attempts required for a successful pass increases. This could be studies in a hatchery fishway, where the leap success ratio (successful leaps:leap attempts) would be recorded for a range of water surface drops.

4. Migration distance from ocean to barrier reducing fish capabilities: a survey could be taken to record the river miles to a barrier, height of barrier and species which pass or are blocked.

5. Aerial photography: low-level, balloon or helicopter-mounted photographic equipment should be used. These photoqraphs can greatly reduce site survey time and provide excellent visualization, when used with ground survey controls and when taken at different stages of stream flow.

6. The "Chute and Pool" spillway should be tested over a wide range of conditions to determine the optimum floor baffle arranqements, and geometric and operational characteristics, for passinq various species of salmon and trout (and possibly other species such as shad).

REFERENCES

Aaserude,R.G., "New Concepts in Fishway Design," M.S.Thesis, Dept. Civil and Environmental Engineering, Washinqton State University, 1984 (Report Part 2 of 4, BPA Project 82-14 Report, 1985).

Antonnikov, A.F., "Hydroelectric Construction and the Problem of Fish Passage Facilities," Trans. by Ale A. Mathisen from Hydroelectric Construction, No. 3, 26-29, Fisheries Res. Inst., Univ. of Wash., Circular No. 225, 1964.

Bell, Milo C., "Fisheries Handbook of Enqineering Requirements and Biological Criteria,"Fish. Enqr. Res. Proq., Corps of Enqrs., N. Pac. Div., Portland, OR, 1973 and 1984.

Blake, R.W., "Fish Locomotion," Cambridqe University Press, Cambridge, 1983.

Calderwood, W.L., "Salmon and Sea Trout," Edward Arnold and Co., London, England, 1930.

Clay, C.H., "Design of Fishways and Other Facilities," Dept. of Fish. of Canada, Ottawa, 301 p., 1961.

Collins, Gerald B., "Proposed Research on Fishway Problems," Unpublished, submitted to the U.S. Army Corps of Engineers, Fish and Wildl. Serv., 1951.

Collins, Gerald B. and Elling, Carl H., "Fishway Research at the Fisheries Engineering Research Laboratory," Bur. of Commercial Fisheries, Circular 98, 1960.

Collins, Gerald B. and Gauley, Joseph, "Ability of Salmonids to Ascend High Fishways," U.S. Bureau of Commercial Fisheries, Trans. of the American Fisheries Society, 91(1), 1962.

Collins, Gerald B., Elling, Carl H., Gauley, Joseph R., and Thompson, Clark S., "Effect of Fishway Slope on Performance and Biochemistry of Salmonids," U.S. Fish and Wildl. Serv. Fish. Bull. 63(1):221-253, Washinqton, D.C., 1963.

Dane, B.G., "A Review and Resolution of Fish Passage Problems at Culvert Sites in British Columbia," Fish. and Marine Service, Tech. Rpt. 810, 1978.

Donahue, E.E., Pre-Cast Concrete, V-Shaped, Extendable Fish Ladder for Chinook Salmon Hatchery on Lake Oahe, South Dakota, Personal communication, 1983.

Elling, Carl H. and Raymond, Howard L., "Fishway Capacity Experiment," United States Fish and Wildl. Serv. Fisheries, No. 299, May, 1959.

Enqberg, Robert (Ed.), "John Muir Summerinq in the Sierra," Univ. of Wisconsin Press, Madison, Wisconsin, 1984.

Evans, W.A. and Johnston, B., "Fish Miqration and Fish Passage--A Practical Guide to Solving Fish Passage Problems," USDA EM7100-12, Forest Service, June 1980.

Fairbridqe, R.W., "The Encyclopedia of Geomorpholoqy, "Encyclopedia of Earth Sciences Series, Vol. III, Waterfalls by D.C. Ford, Reinhold Book Corp., New York, pp. 1219-1220, 1968.

Gauley, Joseph R., "Effect of Fishway Slope on Rate of Passaqe of Salmonids," USFWS, Bur. Comm. Fish. Spec. Sci. Rpt., Fisheries No. 350, 23 p., 1960.

Hoar, William S., "The Analysis of Behaviour of Fish," H.R. MacMillan Lectures in Fisheries: The Investigation of Fish-Power Problems," Symp. of April 29-30, 1957, Inst. of Fisheries, Univ. of British Columbia, Vancouver, pp. 99-111, 1958.

Hoar, W.S. and Randall, D.J. (Eds.), "Fish Physioloqy," Vol. VI, Chap 1, (F.E.J. Fry, Environ. Effects on Physioloqy--Ref. 29), Academic Press, N.Y., pp. 1-98, 1971.

Institution of Civil Enqineers, Report of the Committee on Fish-Passes, William Clowes and Sons, Limited, London, 1942, Reprinted 1948.

Jackson, J.R., "Variations in Flow Patterns at Hell's Gate and Their Relationships to the Migration of Sockeye Salmon," Intl. Pac. Salmon Fish. Comm. Bull. No. 3:85-129, 1950.

Lonq, Clifford W., "Passaqe of Salmonids Throuqh a Darkened Fishway," USFWS, Fisheries No. 300, May, 1959.

McLeod, A.M. and Nemenyi, Paul, "An Investigation of Fishways," University of Iowa, Studies in Enqr. Bul leti n 24, 1939-1940.

Northwest Power Planning Council, "Northwest Energy News," Vol. 1(3), May /June, 1982,. p. 17.

Northwest Power Planning Council, "Columbia River Basin Fish and Wildlife Proqram," Portland Reqion, Adopted November 15, 1982, Amended Oct. 10, 1984.

Paulik, G. J. and DeLacy, A.C., "Swimming Abilities of Upstream Migrant Silver Salmon, Sockeye Salmon, and Steelhead at Several Water Velocities," Univ. Wash. Coll. Fish. Tech. Rpt. 441, 40 p., 1957.

Pryce-Tannatt, T.C., "Fish Passes in Connection with Obstructions in Salmon Rivers," The Buckland Lectures for 1937, Edward Arnold and Co., London, Enqland, 1938.

Sakowicz, Stanislaw and Zarnecki, Stanislaw, "Pool Passes--Biological Aspects in Their Construction," Roczniki Nauk Rolniczych, Warsaw, Poland, 69, Series D5, p. 171, 1954, Translated from Polish 171, U.S. Dept. of Comm. Office of Tech. Serv., Washington, D.C., 1962.

Stuart, TA., "The Leaping Behavior of Salmon and Trout at Falls and Obstructions," Department of Aq. and Fish. for Scotland, Freshwater and Salmon Fisheries Research, His Majesty's Stationery Office, Edinburgh, No. 28, 1962, and reprinted in 1964.

Truebe, J. and Drooker, M., "Modular Innovations in Upstream Fish Passage," DOE/ID/12207-T2 (Cont. No. 82010268), Dept. of Energy, Available from NTIS, 1981.

U.S. Army Corps of Engineers, North Pacific Division, "Fishway Attraction Water Supply Study," pp. 43-45, In Proqress Report on Fisheries-Enqineerinq Research Program, Portland, July, 1960.

U.S. Army Corps of Enqineers, North Pacific Division, "Powerhouse System Attraction and Transportation Flows, Bonneville Dam," pp. 42-48, In Progress Report on Fisheries-Enqineerinq Research Program, November i956 and July 1960.

VanDerwalker, J.G., "Response of Salmonids to Low Frequency Sound," in Marine Bio-Acoustics, Vol. 2, Proc., 2nd Symposium, 13-15, April, 1966.

Weaver, Charles R., "Influence of Water Velocity Upon Orientation and Performance of Adult Migratinq Salmonoids," WSFWS Bur. Comm. Fish. 63(1):97-121, 1963.

Webster, D.A., "Leaping Rainbows of the Finqer Lakes," N.Y. State Conservation Dept., Division of Conservation Education, Information Leaflet, 1965.