New Concepts in Fish Ladder Design, Volume III of IV

Assessment of Fishway Development and Design

Final Report
1982 - 1984

DOE/BP-36523-4

August 1985

This Document should be cited as follows:

Powers, Patrick, Thomas Bumstead, John Orsborn, "New Concepts in Fish Ladder Design, Volume III of IV; Assessment of Fishway Development and Design", 1982-1984 Final Report, Project No. 198201400, 181 electronic pages, (BPA Report DOE/BP-36523-4)

Bonneville Power Administration
P.O. Box 3621
Portland, OR 97208

This report was funded by the Bonneville Power Administration (BPA), U.S. Department of Energy, as part of BPA's program to protect, mitigate, and enhance fish and wildlife affected by the development and operation of hydroelectric facilities on the Columbia River and its tributaries. The views in this report are the author's and do not necessarily represent the views of BPA.

FISHWAYS-AN ASSESSMENT OF THEIR DEVELOPMENT AND DESIGN

Final Project Report
Part 3 of 4

Prepared by

Patrick D. Powers
John F. Orsborn
Thomas W. Bumstead
Sharon Klinger-Kingsley
Walter C. Mih

Washington State University
Department of Civil and Environmental Engineering

Prepared for

Thomas Vogel, Project Manager
U.S. Department of Energy
Bonneville Power Administration
Division of Fish and Wildlife
P.O. Box 3621
Portland, OR 97208-3621

Project No. 82-14
Contract Number DE-AI79-82BP36523

August, 1985

TABLE OF CONTENTS

	Page
LIST OF TABLES	vi
LIST OF FIGURES	viii
SUMMARY OF RESEARCH PROJECT REPORTS	xi
ACKNOWLEDGMENTS	xiii
SHORT GLOSSARY OF FISHWAY TERMS	xv
ABSTRACT	xvii
LEGACY	xix
INTRODUCTION	1
HISTORICAL DEVELOPMENT OF FISHWAYS AND THE EVOLUTION OF DESIGN CONCEPT	3
Major Developments	11
Research on Design	11
Pacific Northwest Developments	14
FISHWAY CLASSIFICATION	23
1. FISH LADDERS	23
Entrance Conditions	23
Entrance Location	24
Entrance Hydraulics	24
Examination of the Pool and Weir/Orifice Types	25
Vertical Slot Type Fishway	32
Chute type Fishways	34
Exit Conditions	37
2. CULVERTS	38
Baffled Culverts	43
3. FISH LOCKS AND FISH ELEVATORS	45

TABLE OF CONTENTS (Continued)

	Page
HYDRAULIC CONDITIONS IN FISHWAYS	46
Pool and Weir Flow	46
Chute Flow	46
Orifice and Slot Flow	48
Velocity Calculations	48
CAPABILITIES OF FISH AND CONTROLLING CONDITIONS	51
Introduction	51
Swimming Speeds	52
Leaping Ability and Maximum Speed	57
Factors Affecting Fish Speeds	58
Homing	59
Energetics	60
LOCOMOTION AND HYDRODYNAMICS	63
Introduction	63
Swimming Modes	65
Basic Equations of Fluid Flow	66
Relationships Between Flow Conditions and Fish Speeds	68
A CONCEPTUAL, ANALYTICAL MODEL OF THE ENERGY REQUIREMENTS OF ASCENDING FISH	73
Basic Fluid Mechanics and Fish Capabilities	73
Swimming Through a Port	75
Swimming Up a Sloping Channel	77
Leaping Over a Waterfall or Weir	88
Summary of Energy Requirements for Fish to Ascend Through Ports, Up Chutes or Over Weirs	91
THE ROLES OF STIMULUS, RESPONSE, AND STRESS IN THE DESIGN OF FISH PASSAGE STRUCTURES	93
Introduction	93
Stimulus and Response	94
Stresses	97
SALMONID PREFERENCE FOR HIGHER VELOCITIES DURING UPSTREAM MIGRATION	100
Introduction	100
TestData	100
Methods of Analysis	101

TABLE OF CONTENTS (Continued)

	Page
Analysis to Include Chance	101
Summary	105
DESIGN SURVEY AND INTERVIEWS	106
Attraction Velocity	107
Observations of Fish Passage	108
Design Philosophies	109
SOME CONSTRUCTION CONSIDERATIONS	120
APPENDIX I.--BIBLIOGRAPHY	125
APPENDIX II.--RESEARCH SUMMARY FOR THE INITIAL DEVELOPMENT OF NEW CONCEPTS IN WEIR AND POOL FISH LADDER DESIGN	142

LIST OF TABLES

Table		Page
1.	Fishway characteristics	5
2.	Fish-subsystem characteristics	5
3.	Pool and Weir, and Pool and Orifice Types	25
4.	Summary of design criteria for pool and weir/orifice fish ladders for use with Figure 21	27
5.	Vertical slot fishway dimensions and criteria	32
6.	Summary of Steeppass floor and side fin angles	37
7.	Water velocity relationship to resting pool distance for salmon, steelhead, and resident trout	41
8.	Popular and scientific names of some common anadromous and resident commercial and sport fish species	51
9.	Nominal upper limits of sustained, prolonged, and burst speeds of adult fish	55
10.	Some historical highlights of the study of fish locomotion from 600 B.C.-1971	64
11.	Summary of equations used in the analysis of fish and flow relationships	69
12.	Frontal area as a function of fish length when resting and swimming	74
13.	Selected values of burst speeds	75
14.	Water velocity in a chute for roughness, n = 0.01	80
15.	Energy requirement for swimming up a chute for roughness, n=0.03	82
16.	Distance against velocity for adult sockeye swimming up an inclined plane using Eq. (21)	85
17.	Energy requirement for leaping from a level pool for a four-pound fish	89

LIST OF TABLES (Continued)

Table		Page
18.	Energy requirement for leaping from a standing wave for a four-pound fish	90
19.	Summary of energy requirements of a four-pound ascending fish swimming through a port, up a chute, and leaping an equivalent height	92
20.	Environmental passage conditions for a fishway unit	95
21.	Velocity combinations and data reduction for analyzing the selection of the higher velocity channel by silver and chinook salmon and steelhead trout	101
22.	Data reduction and velocity combinations for analyzing the selection of the higher velocity channel by silver and chinook salmon and steelhead trout using the momentum difference between two attraction flows and their momentum--a fish attraction factor	102
23.	List of addresses for Fishway Design Questionnaire	110
24.	Fish Ladder Questionnaire for International Survey	112
25.	Discussion topics for personal interviews during the period of June, 1982-September, 1984	113
26.	Summary of responses to Questions 5, 6, and 3 of the International Survey	114
27.	Composite of fishway design questions resulting from interviews and survey responses	117

LIST OF FIGURES

Figure		Page
1.	Nomenclature and characteristics of a fishway flow system . . .	2
2.	Nomenclature and characteristics of a fish subsystem	6
3.	Nomenclature and characteristics of fishway subsystems	6
4.	Ice Harbor type pool, weir and port fishway at Lower Granite dam on the Snake River near Wawawai, Washington	8
5.	Full overflow weir fishway at Easton diversion dam in the headwaters of the Yakima River, Washington	8
6.	Single-slot fishway on Mill Creek diversion dam in Southeastern Washington	9
7.	Denil-type fishway at culvert outlet on Hastings Creek near Vancouver, British Columbia	9
8.	Alternating-weir fishway at Johns Creek hatchery near Shelton, Washington at high flow	10
9.	Two versions of WSU pool-weir-baffle fishway installed at Johns Creek hatchery with the same total drop as in Fig. 8 under excessively high flow for observation	10
10.	MacDonald's steep slope Fishladder of 1879 in Virginia	12
11.	Plan view and section of Landmark's first slotted Fishway . . .	12
12.	Denil's early fishpass with roughness elements on floor and walls	13
13.	Denil's fishway modifications with emphasis on wall roughness and smooth floor	13
14.	Initial Bonneville overflow weir and submerged orifice ladder .	16
15.	Hell's Gate double-slotted fishway on the Fraser River in British Columbia	17
16.	Ice harbor fishladder design with double weir and double port .	18
17.	Type A, Alaska Steeppass/Denil No. 6 Fishway	20

LIST OF FIGURES (Continued)

Figure		Page
18.	Aeroceanics spiral fishway	20
19.	Pipe fishway for trout at Helena Lake, British Columbia	19
20.	Warner Fishlift installed at Cariboo Dam on the Brunette River near Burnaby, British Columbia	22
21.	Nornenclature sketch for weir and port fishladder	26
22.	Section through Corps of Engineers beveled weir crest and port	28
23.	Profile shape of weir floor suggested by Menzies	29
24.	Cross section of weir with circular base and flared top similar to WSU weir design	29
25.	Orifice-tube fishladder sloping down 45 as developed by ICE Committee on Fish Passes-	30
26.	Sloping, centerline-orifice fishway developed by McLeod and Nemenyi	31
27.	Inclined pipe orifice fishway	31
28.	Nomenclature sketch for slotted fishways showing single slot type	33
29.	Institution of Civil Engineers modified Denil Fishway	35
30.	Typical dimensions of Alaska Steeppass Fishway	36
31.	Two vertical slot baffle systems developed at the Bonneville Fisheries-Engineering Laboratory for controlling fishway flow when forebay elevation fluctuates	39
32.	Relationship of relative swimming speed to relative length for artic grayling	42
33.	Culvert Baffle arrangement suggested by McKinley and Webb . . .	44
34.	Hydraulic conditions for shooting and plunging flow after Bell	47
35.	Rating curves for Alaska Steeppass Type A fishway . . . , . . .	50

LIST OF FIGURES (Continued)

Figure		Page
36.	Interrelationships of fish and velocity during four life stages with emphasis on upstream migration	53
37.	Speed, fatigue time and fish size for young rainbow and sockeye	56
38.	Body shape during propulsive cycle for subcarangiform motion of Salmo gairdneri taken at 0.03 sec. intervals	65
39.	Nomenclature for velocity profile	70
40.	Velocity distribution downstream of a port	76
41.	Open channel flow	78
42.	Sockeye swimming velocity related to fatigue time	87
43.	Distance that adult sockeye can swim before tiring as a function of channel roughness and slope	86
44.	Angle of velocity of leaping from a quiet pool	88
45.	Choice of higher velocities by upstream migrating salmon and steelhead related to momentum level in the attraction flows as defined by the momentum difference divided by the average momentum in the two jets	104
46.	View of Rogers Creek fishway and falls	122
47.	Turning chamber near entrance to Rogers Creek fishway at high flow	122
48.	Rogers Creek weir:baffle:pool fishway operating at a flow of a few cubic feet per second	123
49.	Rogers Creek weir:baffle:pool fishway operating at an intermediate flow of about six to seven cubic feet per second	123

SUMMARY OF RESEARCH PROJECT REPORTS

Bonneville Power Administration
BPA Fisheries Project 82-14

DEVELOPMENT OF NEW CONCEPTS IN FISH LADDER DESIGN

Conducted at the
Albrook Hydraulics Laboratory
Department of Civil and Environmental Engineering
Washington State University
Pullman, Washinqton 99164-3001

Project Period: June, 1982-October, 1984

1. **Orsborn, John** F. 1985. **SUMMARY REPORT**

   A synopsis of the project components was prepared to provide an overview for persons who are not fisheries scientists or engineers. This short report can be used also by technical persons who are interested in the scope of the project, and as a summary of the three main reports. The contents includes an historical perspective on fishway desiqn which provides the basis for this project. The major project accomplishments and significant additions to the body of knowledge about the analysis and design of fishways are discussed. In the next section the research project organization, objectives and components are presented to familiarize the reader with the scope of this project.

   The summary report concludes with recommendations for assisting in the enhancement and restoration of fisheries resources from the perspective of fish passage problems and their solution. Promisinq research topics are included.

2. **Aaserude, Robert** G. and John **F. Orsborn. 1985. NEW CONCEPTS IN FISHLADDER DESIGN. --Results of Laboratory and Field Research on New Concepts in Weir and Pool Fishways. (With contributions by Diane Hilliard and Valerie Monsey).**

   The drivinq force behind this project, and the nucleus from which other project components evolved, was the desire to utilize fish *leaping capabilities more efficiently in fishway desiqn. This* **report focuses on the elements which were central to testing the premise that siqnificant improvements could be made in water use, costs and fish passage efficiencies by developing a new weir and pool fishway. These elements include: historical review of available information; optimization of weir geometry; fluid jet mechanics; air entrainment; enerqy dissipation in the pool chamber; and fish capabilities. The new weir and pool chambers were tested in the field with coho and chum salmon.**

3. Orsborn. John F. and Patrick D. Powers. 1985. FISHWAYS--AN ASSESSMENT OF THEIR DEVELOPMENT AND DESIGN. (With contributions by Thomas W. Bumstead, Sharon A. Klinger, and Walter C. Mih.)

This volume covers the broad, though relatively short, historical basis for this project. The historical developments of certain design features, criteria and research activities are traced. Current design practices are summarized based on the results of an international survey and interviews with agency personnel and consultants. The fluid mechanics and hydraulics of fishway systems are discussed.

Fishways (or fishpasses) can be classified in two ways: (1) on the basis of the method of water control (chutes, steps [ladders], or slots); and (2) on the basis of the degree and type of water control. This degree of control ranges from a natural waterfall to a totally artificial environment at a hatchery. Systematic procedures for analyzing fishways based on their configuration, species, and hydraulics are presented. Discussions of fish capabilities, energy expenditure, attraction flow, stress and other factors are included.

4. Powers, Patrick D. and John F. Orsborn. 1985. ANALYSIS OF BARRIERS TO UPSTREAM MIGRATION. --An Investigation into the Physical and Biological Conditions Affecting Fish Passage Success at Culverts and Waterfalls.

Fish passage problems at natural barriers (waterfalls) and artificial barriers (culverts) are caused by excessive velocity and/or excessive height. By determining which geometric or hydraulic condition exceeds the capabilities of the fish, the most promising correction can be made to the barrier.

No waterfall classification system was found in the literature which could be applied to fish passage problems. Therefore a classification system was designed which describes: (1) downstream approach conditions at the base of the barrier; (2) central passage conditions as in a hiqh velocity chute or the leap over a falls; and (3) upstream conditions where the fish exits the high velocity chute or lands after leaping past a barrier.

The primary objective was to lay the foundation for the analysis and correction of physical barriers to upstream migration, with fishways being one of the alternative solutions. Although many passage improvement projects are economically small compared with those at large dams, each year millions of dollars are spent on solving these smaller passage problems--and sometimes the money is wasted due to poor problem definition. This report will assist in both the definition of the problem and selection of the most beneficial solution.

ACKNOWLEDGMENTS
(BPA Fisheries Project 82-14)

The financial support for this project was provided by the Bonneville Power Administration, Portland, Oregon. The project was initiated prior to the time that the Fish and Wildlife Program of the Northwest Power Planning Council was developed and initiated. The results of this project have already found, and will continue to find, many opportunities for application to the problems addressed in the NPPC Fish and Wildlife Program for the Columbia River Basin.

We wish to express our gratitude to numerous active and retired agency personnel and consultants who responded to our design questionnaire and participated in personal interviews. The names and addresses of many are listed in other parts of this report, but those who were especially helpful include:

F. J. Andrew - International Pacific Salmon Fisheries Commission
Doug Arndt - NPD, USCE
Bill M. Bakke, Director, Trout and Salmon Resource Center
Ken Bates - WDOF
Milo Bell - Consultant
Ted Bjornn - Idaho Cooperative Fishery Unit
Roger Bogden - WDOG
Bert Carnegie - ODFW
Wayne Daley - KCM
Brian Dane - Canadian Fisheries and Marine Service
Mike Dell - Grant Co. PUD
Ivan Donaldson - Retired
Edward Donahue - Fish Pro Consultants
Ray Finnigan - Canadian Fisheries and Marine Service
M. Fretwell - International Pacific Salmon Fisheries Commission
Jim Haas - ODFW
Thomas M. Humes - Consulting Western, Ltd., Cranbrook, B.C.
John Hutchins - Anderson, Bjornstad, Kane and Jacobs
Chris Kellogg - Corrosion Controllers, Inc.
Christine Moffitt - Idaho Cooperative Fishery Unit
Bob Pearce - NMFS
Jim Riis - South Dakota Dept. of Game, Fish and Parks
Charles Ritzi - Consultant, Winthrop, Maine
Emil Slatick - NMFS
Hugh Smith - Retired
Gerry Taylor - B.C. Ministry of the Environment
Clark Thompson - Retired
Chuck Wagner - Retired
Dick Weaver - Retired
Russ Webb - WDOF

Our special acknowledgement of helpful cooperation goes to the Washington Department of Fisheries for the use of its hatcheries for field testing of our new fishway designs In particular we wish to thank Dennis Popochock for use of the Johns Creek facility.

The advice, guidance, criticism and support of our BPA contracting officer's representative, Thomas S. Vogel, were extremely important to the success of this project. His suggestions at critical points were very beneficial.

The project personnel were:

Robert G. Aaserude
Robin Bayley
Thomas W. Bumstead
Kathy Cox
Diane Hilliard
Peter Hines
C. J. Khisty
Sharon A. Klinqer
Ann E. Martinson
Walter C. Mih
(Co-Principal Investigator)
Valerie Monsey
B. J. Naik
John F. Orsborn
(Principal Investigator)
Patrick D. Powers

SHORT GLOSSARY OF FISHWAY TERMS

ALASKA STEEPPASS: a type of Denil fishway developed for use in remote areas of Alaska; prefabricated of metal in sections which can be connected on site; has vanes on floor and sides to reduce velocity; high air content in flow.

ATTRACTION FLOW: flow exiting the downstream end of the fishway; the fishway flow is sometimes augmented by the auxiliary flow to form a larger attraction flow; auxiliary flow is usually needed where there are competing flows which could attract fish from the fishway entrance, such as from powerhouses, spillways or waterfalls.

BAFFLE: any protrusion on the floor and/or walls of a chute or channel used to create an energy loss (velocity reduction) in the flow; large baffles provide a wake behind the baffle where fish can rest; in hydraulic engineering a baffle is any device which is used to dissipate (baffle) kinetic energy (caused by velocity).

BARRIERS: to upstream migration; physical and chemical; natural and artificial; debris and log jams; chutes, falls, culverts, temperature; chemical.

DENIL: a fishway chute with roughness elements (baffles, vanes) on the sides and floor which cause the average velocity to be reduced; much air is entrained which reduces the attractiveness of the flow at the downstream end of the fishway; usually constructed as a connecting fishway between resting pools, a chute and pool fishway.

FISH LADDER: a type of fishway consisting of a series of steps (like a ladder) or drops for dissipating water energy in expansion eddies in pools.

FISH PASS: term for fishway more commonly used in Europe.

FISH SPEEDS: (or velocity) defined in three ranges: sustained, prolonged and burst (formerly called cruising, sustained and dart or burst) speeds; fish can swim sustained indefinitely without tiring; prolonged speeds are for 20 sec. to 200 min. but fish will become exhausted; and burst speeds can be maintained for 5-20 secs. and result in exhaustion. Burst speeds are used fur leaping. Speeds are a function of fish size, species, condition, life phase and water quality. A steelhead maximum burst speed is about 28.0 ft/sec (fps).

FISHWAY: general term *for any flow passage which fish negotiate by swimming* and/or leaping; can be a high velocity chute, a cascade or vertical waterfall in nature; can be a man-made (artificial) structure such as

a culvert, a series of low walls across a channel (weir and pool fishway) or merely a chute up which the fish swim.

FISHWAY CHAMBER OR UNIT: one of the parts of the fishway which governs the type of flow through the fishway (chute, weir and pool, lock etc.).

FISHWAY ENTRANCE: downstream opening in the fishway structure through which fish enter the fishway; also the outlet for the fishway attraction flow.

FISHWAY EXIT: upstream end of the fishway from which fish exit the structure; also the intake for the fishway flow.

FLOW: The amount of water passing a point (or cross-section) in a fishway; discharge; measured in cubic feet per second; volume of flow per unit of time. Symbol Q.

FLOW CONTROL: the means whereby the amount of flow and the drop in water surface elevation pools is controlled; can be by weir walls across the fishways; weir openings of various shapes; ports through the bottom of the weir walls; baffles (short walls perpendicular to flow extending from the fishway side walls and floor; and vertical slots (developed for Hell's Gate slide on the Frasier River in B.C.).

KINETIC ENERGY: the energy due to the velocity of the flow; caused by gravity in fishways and streams.

MOMENTUM: product of the discharge multiplied by the net change in velocity when the flow changes direction, or the velocity is dissipated in a large pool, such as attraction flow.

RELATIVE VELOCITY: speed at which a fish moves relative to the water, or to the boundary of the fishway.

STREAM: any moving body of water; all rivers are streams, but not all streams are rivers.

SlRESS: Can be caused by; repeated expenditures of energy (say in unsuccessful jumping at a barrier); chemicals, temperature and oxygen levels; prolonged swimming at a taxing rate; swimming from a lower to higher velocity region; or environmental changes.

VELOCITY: speed of water through a cross-sectional flow passage area; mean velocity equals flow amount divided by cross-sectional area of the flow. Local velocities can be considerably higher or lower than the average through a passage. Symbol V.

VELOCITY PROFILE: values of velocity at different depths at a section; higher velocities near surface reduce to zero at the bottom.

Fishways--An Assessment of Their Development and Design

ABSTRACT

Various areas of scientific and engineering endeavor in natural resources development and maintenance receive oscill ating amounts of attention and support. As a result, and as reflected in the literature on fishways, the state-of-the-art receives pulses of useful information from research and the monitoring of completed projects. For example, such pulses of effort occurred in Britian and the United States in the late 1800s, in Belgium between 1908 and 1939, in Britain and the United States again from 1936 to 1940, and in the Pacific Northwest on the Columbia River in the period from 1950s to the 1970s.

Certain classical types of fishways have emerged from the documentation of this effort such as: the Denil chute fishway, the Alaska steeppass, the Ice Harbor pool-port-weir fish ladder, and the Hell's Gate slotted fish ladder. Variations on each of these basic designs number in the tens, and they have been developed usually to meet specific site conditions, to handle smaller or fewer fish, or to test new design variables under prototype conditions.

The design criteria developed from these experiences have emerged in a somewhat conservative aura. As a result, natural selectivity has been lost at sites where fishways have greatly reduced the size of the energy expenditure increments required for fish to negotiate a reach of stream. Designed fishways initially dealt with fish response to various flow configurations. But in the last 30-40 years more attention has been paid to stimulus, attractive releasers and response in fish passage design. Numerous empirical studies have developed a rich reservoir of hydraulic and geometric information, and their associated design criteria.

But, many fishway desiqn topics have not received a fundamental analysis from the biomechanical and fluid mechanical perspectives. Also, many of the desiqn criteria have not been thoroughly tested (not observed, but tested) with fish in prototype situations. As a result there is room for improvements in efficiency- in the efficiency of fish passage, water usage and economics. For example, doubling the leaping heiqht for a weir and pool fishway, for certain species would cut the cost of the structure by almost 50 percent. Water economies would result only at sites where there are competing uses for the flow, but that does not obviate the basic design objective of minimizing water use under any circumstances. Although numerous theoretical studies on the locomotion of fish and their hydrodynamic advantage have been reported, the instances wherein the results of these studies have been applied to the improvement of fishway designs have been scarce.

Therefore, we have explored some of the components of fishway theory, design and construction through: literature assessments, personal design surveys and interviews, theoretical and applied analyses (and testing) of stimuli, and the energy expenditure of ascending fish in various passage modes. A fundamental analysis of attraction flows, based on data from the USCE Bonneville Fisheries-Enqineering Laboratory, supplies the physical basis for fishway attraction flow design. Tests using typical fishway attraction flow and stream geometries with various species of fish are still needed to expand this analysis.

Because much of the current fishway construction is being done in more remote and smaller systems, some consideration has been given to the use of alternative construction methods and materials. Also, because of the breadth and depth of the project an extensive bibliography is included in this volume. This report concludes with an appendix which summarizes the early stages of development of a new weir, pool, and baffle fishway. Although testing has been conducted with only two species of salmon, the early results are very promising.

LEGACY

"Artificial destruction has made lakes and rivers as barren as deserts, so far as fish-food is concerned. Prior to the gold period the Tuolumne (River in California) abounded in salmon, but the mud of mining destroyed them, or drove them away. The Connecticut (River) was also a salmon stream until obstructed by dams, and poisoned by those strangely-complicated filths for which our civilization is peculiar. When fish ladders are constructed over dams and the sewage of towns and factories is consumed upon the land instead of being poured into the water, leaving paths from the ocean to the spawning grounds free and clean, then our valuable migratory food fishes, such as shad and salmon, will again become abundant. . . ."* John Muir, McCloud River, 1874.

---

*Engberg, Robert. John Muir Summering in the Sierra. Quoted with permission from the University of Wisconsin Press. Madison, Wisconsin. 1984.

INTRODUCTION

The 1874 statement by Jonn Muir below the picture on the previous page was used in the Introduction for Part 1 of this four-part report. It bears repeating because as Muir noted over 100 years ago, if dams are built, then successful fish ladders should be an integral part of those dams. The loss of the court case in 1825 over the construction of an illegal dam (without a fishway) caused the demise of the St. Croix River run of Atlantic salmon in Maine. Our history shows other similar cases across the United States which are more numerous than can be justified on any basis.

If an artificial barrier to upstream migration is created (a dam, culvert, or box bridge) an alternate passage route must be provided for the anadromous and/or resident fish. The alternate route should not add to the level of stress (or even total energy expenditure) compared with the level of energy expenditure experienced by the fish under pre-dam conditions. The comparative analysis of pre- and post-dam energy expenditure by upstream migrating adult fish is complex, and can use many frames of reference. The analysis can range from site specific to total energy available to the fish from the ocean to the spawning site (Idler and Clemson, 1959; Osborne, 1961).

In this volume of our four-part project report we have prepared a series of in-depth sections which deal with bio-engineering aspects of fishway analysis and design. One of those sections covers the development of a conceptual model of the energy expended by ascending fish in negotiating a fishway by swimming and/or leaping.

If one considers energy as a "flow" term (rate of expenditure of energy), a similar systematic approach can be taken to the characterization of the very complex bio-enqineerinq systems we call fishways. All the flow (Q) components of a fishway system (shown in Fiq. 1) are numbers, volumes or events per unit time, for example the number of fish per hour, QFI (Flow of Fish Into the the fishway from the downstream end of the structure).

One qeneral approach to the systematic analysis of complex structures is to define the (fishway) system with a boundary as shown by the dashed line in Fig. 1. The ENVIRONMENT is beyond the control of the system and provides the INPUTS to the system, such as the streamflow (QS). Some of the inputs divide with a portion going over the barrier (QSB) which is still "streamflow " and other portions going through the fishway (QFW), or around it, to appear in the entrance chamber as auxiliary flow (QAX). At fishways where auxiliary flow (QAX) is added to the fishway flow (OFW), they combine to form the OUTPUT attraction flow (QAT).

FIGURE 1.

Nomenclature and Characteristics of a Fishway Flow System

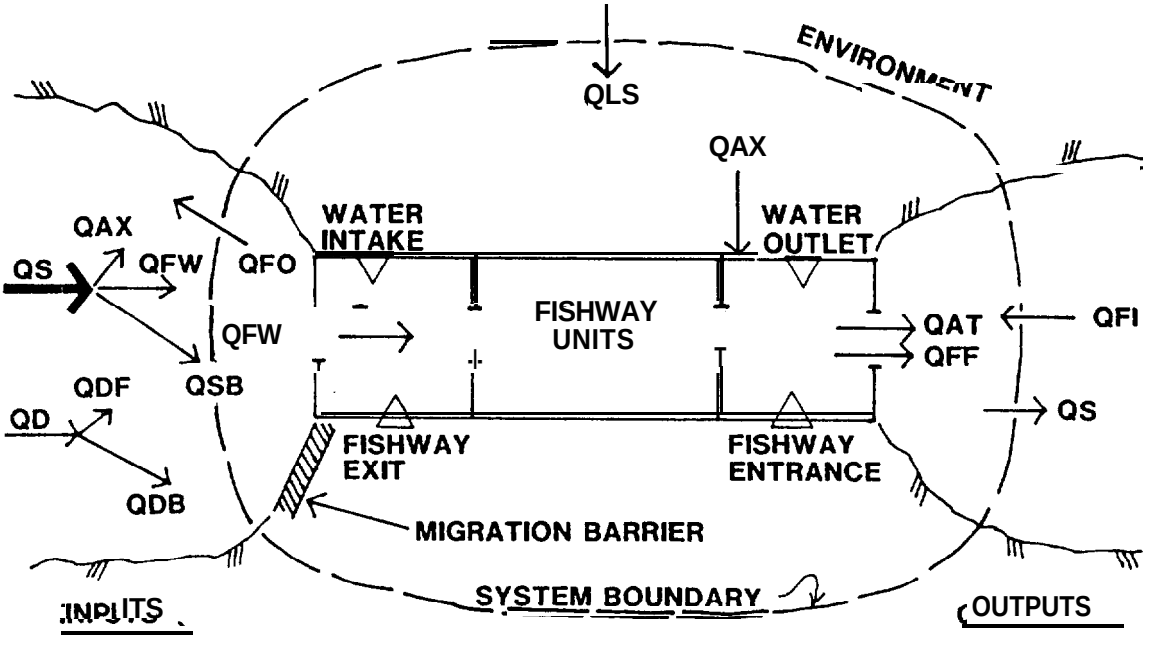

Q = Flow	QDB = Debris to Barrier
QS = Stream	QAT = Attraction
QSB = Barrier	QFI = Fish In
QFW = Fishway	QFO = Fish Out
QAX = Auxiliary	QFF = Fish Fallback
QD =Debris	QLS = Landslide
QDF = Debris to Fishway	

Within the fishway its passage flow input (QFW) is "operated on" within the fishway system and changed in terms of energy forms (velocity and depth). The flow energy changes depend on the type of fishway, whether it is merely a roughened chute, pool and weir or slotted fishway (see Glossary on pages xv-xvi).

The fishway system includes the barrier which necessitated the construction of the the fishway, be it a dam, waterfall, cascade, rock chute or culvert. This approach accounts for the fact that the stream and debris flows divide when the fishway is external to the barrier. In the case of a culvert, or a box bridge with a floor, the fishway could be either internal or external to the barrier.

Not all the inputs, and corresponding outputs are shown in Fig. 1 to reduce congestion. For example, debris flow (QD) is shown as having a partial input to the fishway (QDF), but it is not shown as an output. Debris can be one of the major problems in fishway operation if not avoided by correct intake placement, deflectors, trashracks and/or timely maintenance. Debris is not shown as an output in Fig. 1, because it will usually be deposited within the fishway and removed. Bedload gravels, if allowed to enter the fishway, can reduce the pool volume, increase flow-through velocities, and thus decrease the resting space for fish.

Some of the flow terms can have both positive and negative components. For example

$$QFO\ (\text{Fish Out}) = QFI\ (\text{Fish In}) - QFF\ (\text{Fish Fallback}) \qquad (1)$$

when considered over some time period. As a simple measure of fish passage efficiency one could use

$$\text{Passage Efficiency} = \frac{QFO}{QFI} = \frac{QFI - QFF}{QFI} \qquad (2)$$

Conditions in the fishway must be conducive to timely upstream migration for the fish to stay within the biological time clocks of the species involved.

The most positive (or negative) factor affecting fishway performance is the attraction flow where

$$QAT\ (\text{Attraction}) = QFW\ (\text{Fishway}) + QAX\ (\text{Auxiliary}) \qquad (3)$$

Not only must (QAT) compete with spillway, waterfall and/or powerhouse flows for fish attractiveness, but positioning the fishway entrance too far downstream will negate its function. The fish move as far upstream as they can go, usually to the base of the barrier, where they respond to the strongest flow momentum (discharge times velocity), flow concentrations and disturbances in the flow pattern.

Any system can be described generally by five-common CHARACTERISTICS, and can be subdivided into interdependent subsystems for closer functional analysis. The fishway characteristics are listed in Table 1 within the five groupings of: objectives, functions, management, resources, and the environment. The OBJECTIVES describe what purpose the system seeks to achieve. The FUNCTIONS are those actions (verbs) undertaken to achieve the objective(s). Notice in Table 1 that fishway functions are characterized by the action verbs of attract, provide and return. MANAGEMENT exerts control through monitoring, feedback and regulation of operation. This can range from complex control systems for fishways at dams, to the natural flow fluctuations of a slotted fishway at a waterfall. One must consider both natural and artificial management factors influencing fishway operation, their interactions and their exclusiveness.

The RESOURCES of a fishway system are all the means available to achieve the objectives. As discussed earlier the ENVIRONMENT includes all the factors outside the control of the fishway system which affect its performance. Fishways constructed along an unstable hillside can be adversely affected by landslides (QLS). Though rare and intermittent, they can totally negate the objective functioning of the fishway. The size of the disturbance and the rate of change in conditions would usually be beyond the capacity of a fishway to continue to function without major maintenance or reconstruction.

If we consider an in-depth analysis of a fishway (referring to Fig. l), we must of course reduce it to a series of subsystems including:

- The upstream chamber (fishway exit, water intake)
- The fishway units (or passage chambers)
- The downstream chamber (fishway entrance chamber, water outlet)

But, it is imperative that we consider the biomechanical subsystem of the fish whose five system characteristics are listed in Table 2. The matching of these fish subsystem characteristics with those the fishway is required for successful passage (Tables 1 and 2). The various nomenclature for the fish subsystem are depicted in Fig. 2. Again, for the subsystem as defined, some of the influencing conditions have not been included directly, such as velocity, or pressure. Velocity is included within both streamflow (QS) approaching the fishway, and the attraction flow (QAT). Pressure is a function of the flow depth at which the fish passes, plus local velocity conditions. The hydraulics and fluid mechanics equations governing the fish subsystem in a fishway and the stream environment are presented in subsequent sections of this report on the:

- Hydraulics in Fishways
- Capabilities of Fish
- Locomotion and Hydrodynamics, and
- Energy Expenditure of Ascendinq Fish.

Table 1. **Fishway Characteristics**

OBJECTIVE (What?)

- Pass fish around barrier

FUNCTIONS (How?)

- Attract fish to inlet
- Provide correct passage conditions: depth, velocity, rest, energy expenditure.
- Return fish to Stream without fallback

MANAGEMENT (Control)

- Free flow operation (or regulated ?
- Observation, feedback
- Maintenance
- Modify as needed . . .

RESOURCES (Means Available)

- Past experience
- Water
- Site characteristics
- Materials
- Fish capabilities

ENVIRONMENT (Outside Factors)

- Water quality and quantity
- Debris/Blockage
- Ocean effects on fish run
- Flow fluctuations
- Landslide, Treefalls, Blockage

Table 2. **Fish-Subsystem Characteristics**

OBJECTIVES

- Spawn at home stream
- Negotiate barrier

FUNCTIONS

- Respond to survival instincts
- Respond to local stimuli
- Swim, school, leap . . .
- Seek passaqe

MANAGEMENT

- Feedback response to stimuli from environment

RESOURCES

- Energy reserves
- Instincts
- Capabilities
- Water conditions, velocity oxygen

ENVIRONMENT

- Conditions change from downstream to fishway entrance, passage unit, exit, to upstream . . .
- Color, light, turbulence, dead water space . . .
- Predators
- Flow quantity and quality

FIGURE 2.

Nomenclature and Characteristics of a Fish Subsystem

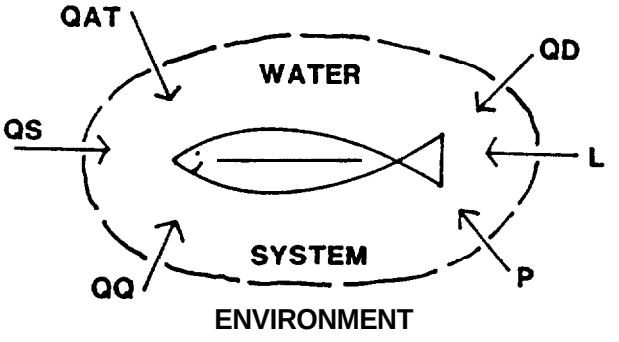

QQ = Flow quallty, temperature, dissolved oxygen...

L = Light

P = Predators

FIGURE 3.

Nomenclature and Characteristics of Fishway Subsystems

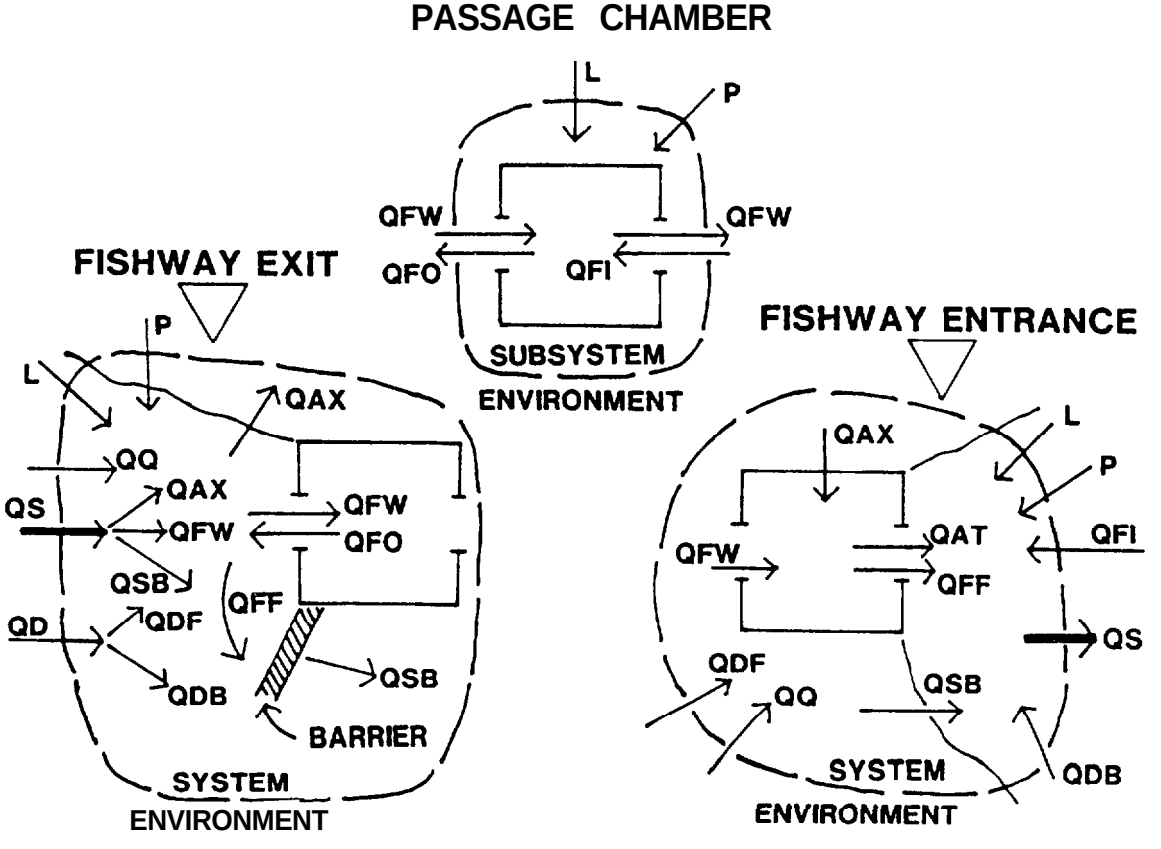

The nomenclature sketches of the three basic parts (subsystems) of the fishway (exit, passage and entrance chambers) are presented in Fig. 3 in more detail than in Fig. 1. The fish subsystem must be interjected into each one of fishway subsystems in sequence to analyze the transient environmental conditions which help, or hinder, fish passage through the structure. In the case of chute fishways, such as a Denil Alaska steeppass or culvert (see Glossary) the fishway system becomes only the passage chamber. The fishway entrance and exit are the tailwater and headwater pools, respectively.

The analysis, design and operation of a fishway can range from simple to extremely complex, depending on the degree of naturalness or artificiality existing at the site. One needs only to review Figs. 1-3 and Tables 1 and 2 to reinforce this range of complexity and simplicity. These figures and tables are only the representations (models) of fishways as conceptualized by a few "modelers." Other persons might visualize (model) fishways from different perspectives. But, hopefully the general systems approach as presented will meet the needs of numerous disciplines associated with fishways. As stated by Stuart (1962) "the perfect fish pass has not yet been designed," (nor modeled).

The first major section of this volume traces the historical development of fishway design. In preparation for this discussion a series of photographs, covering examples of various types of fishways, has been prepared in Figs. 4-9 on succeeding pages.

The weir and port fishway in Fig. 4 is used at Snake and Columbia River dams, and has developed from the original full-width weir and pool type of fishway shown at Easton Dam on the Yakima River (Fig. 5). Although slotted fishways are usually considered to be fish ladders, with drops between pools, slotted fishways (as shown in Fig. 6) can be visualized as chutes with large wall baffles. Chute fishways with smaller baffles on the walls and floor to reduce velocity are of the Denil type shown in Fig. 7.

During the testing of our new fishway at John's Creek hatchery near Shelton, we temporarily replaced the alternating weir fishway (Fig. 8) with several versions of the new weir-pool-baffle fishway (Fig. 9). The historical development of fishways discussed in the next section covers the evolution of design concepts and their associated criteria.

Figure 4. Ice Harbor type pool, weir and port fishway at Lower Granite dam on the Snake River near Wawawai, Washington.

Figure 5. Full overflow we Easton diversion dam in th of the Yakima River, Washi

Figure 6. Single-slot fishway on Mill Creek diversion dam in Southeastern Hashington.

Figure 7. Denil-type fishw outlet on Hastings Creek British Columbia.

Figure 8. Alternating-weir fishway at Johns Creek hatchery near Shelton, Washington at high flow.

Figure 9. Two versions o
baffle fishway installed
hatchery with the same t
Fig. 8 under excessively
observation (November,

HISTORICAL DEVELOPMENT OF FISHWAYS AND THE EVOLUTION OF DESIGN CONCEPTS

Major Developments

Five major events in fishway development have occurred since the early nineteen hundreds. These include: (1) 1908-1939 research by G. Denil from Brussels, Belqium: (2) 1936-1938 research by The Institution of Civil Enqineers, Committee on Fish Passes in England: (3) 1939-1940, studies conducted by McLeod and Nemenyi at Iowa University; (4) 1943-1946, the development of the vertical slot fishway for use at Hell's Gate, Fraser river, BC: and (5) 1951-1972 the U. S. Army Corps of Engineers and the Bureau of Commercial Fisheries research programs at the Bonneville Fisheries Engineerinq Research laboratory.

Before the early nineteen hundreds there was a period of fishway development in which detailed plans were made, but no scientific approach was taken. The objective was to retard the velocity in a steep channel to allow fish passaqe. One attempt appeared in 1879, when Marshall MacDonald from Virqinia invented a fish pass which consisted of a timber trouqh two feet wide by two feet deep, with a slope of 1:3 as shown in Fig. 10. The flow entered the sides of the fishway and was deflected back upstream by buckets to reduce the velocity of the main flow. Even though MacDonald's fishway was an outstandinq idea at that time, his analysis was so incomplete that his fishway was abandoned.

At the time MacDonald built his steep slope ladder, Landmark was designing pool and weir ladders to pass fish over natural falls in Norway. These ladders consisted of a chain of pools which were formed by blastinq throuqh rock formations. Landmark revised this desiqn by installing weirs obliquely to one wall and extendinq across but not joininq the opposite wall (see Fiq. 11). Simple jet deflectors were placed on the opposite wall, creating a narrow slot which extends the full heiqht of the weir (McLeod and Nemenyi, 1941).

Research on Design

The first attempt to approach fishway desiqn scientifically and systematically was initiated by Denil in 1908. Denil's objectives were to describe the nature and maqnitude of the resistances encountered by miqratina fish and their ability to overcome such resistances. From this work he developed the first successful fishway at that time, as shown in Fiq. 12. This fishway consisted of a series of symnetrical "teeth-like" baffles which transported momentum from the central part of the channel to the walls. The main drawback of this fishway was its inadaptability to variations in water level. To provide for a qreater variation of water level, Denil devised a narrow deep

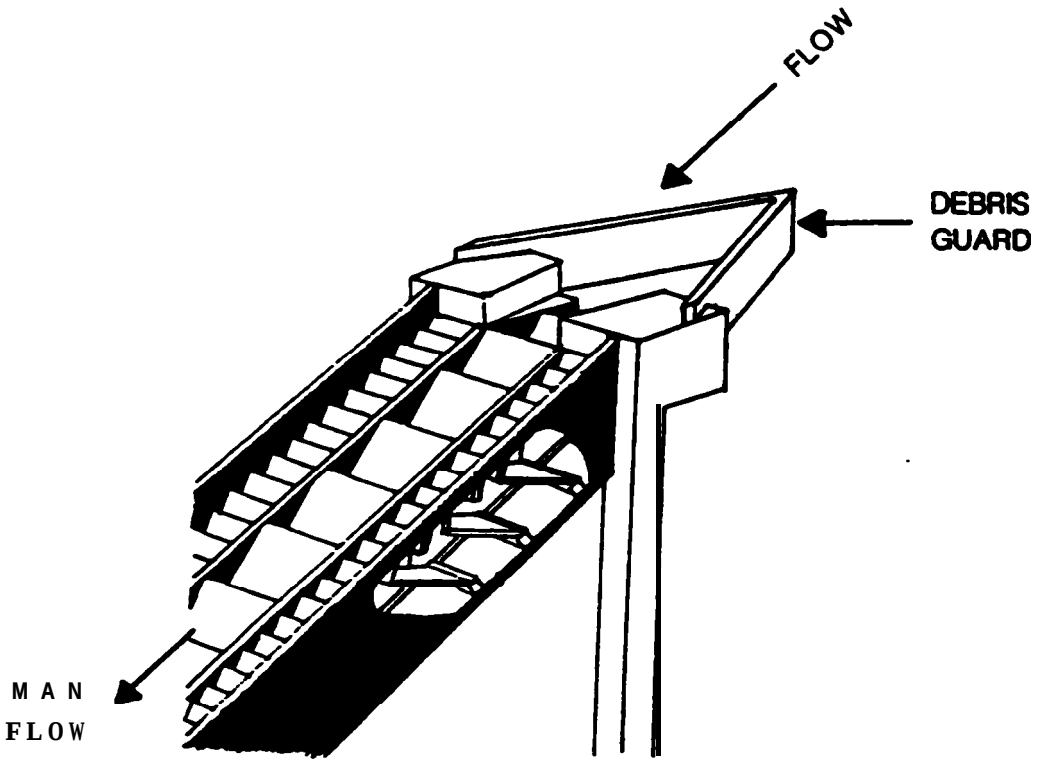

Figure 10. MacDonald's steep slope Fishladder of 1879 in Virginia.

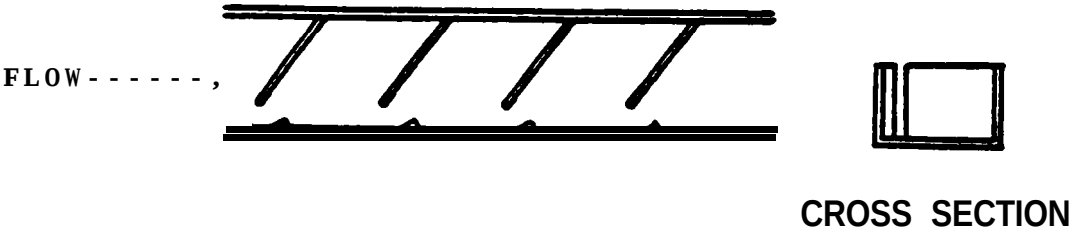

Figure 11. Plan view and section of Landmark's first slotted Fishway (Norway, circa 1890).

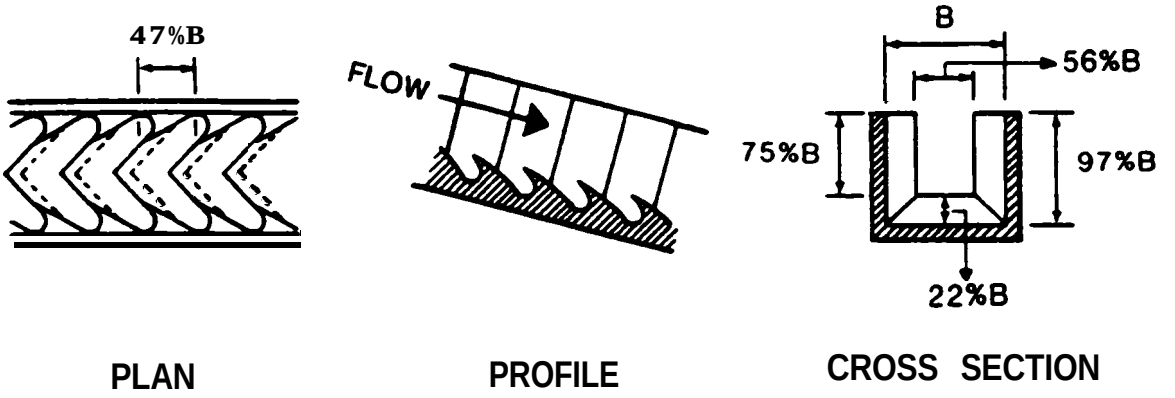

Figure 12. Denil's early fishpass with roughness elements on floor and walls.

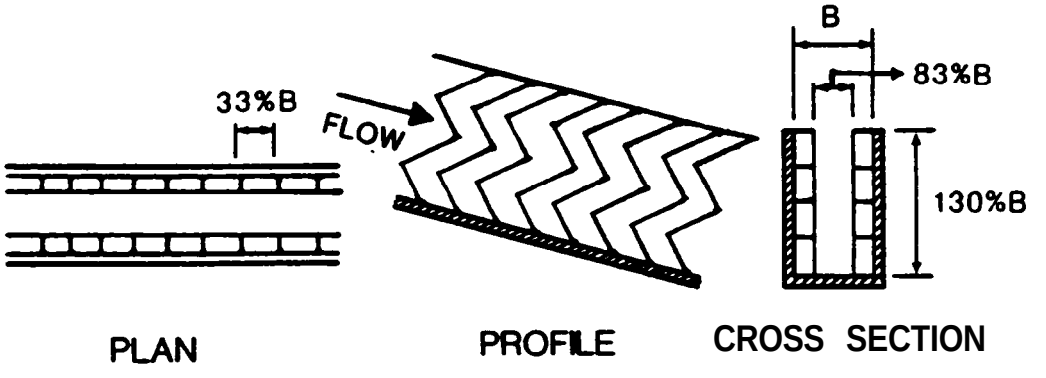

Figure 13. Denil's fishway modifications with emphasis on wall roughness and smooth floor.

channel fishway with only side baffles as shown in Fiq. 13. He suggested that the bottom of the channel should be flat because bottom baffles were hydraulically effective for only a limited ranqe of water depth.

Another drawback of Denil's first fishway was that the baffle confiquration did not lend itself to construction in concrete, and metal or timber had to be used. Denil's channels showed a marked scientific advance, but more important than the results was the stimulus it gave to the fields of ichthyology, fish protection and the application of hydraulic engineerinq to fisheries problems.

Following upon Denil's work, The British Institution of Civil Engineers (1942), Committee on Fish Passes, launched an investigation to study fish passes just prior to World War II. The appendix of the Comnittee's report includes hydraulic research done on fish passes by White and Nemenyi in England (1942). Their comprehensive research covered: (1) jet dispersion in chambers; (2) experiments in pool overfalls; (3) resistance to be overcome by swimminq fish; (4) relations between depth, slope, and flow in open channels; (5) flow in systematically-roughened steep channels; (6) deflection of a submerqed jet to obtain lateral spreadinq; and (7) the upward deflection of a submersed jet.

Twenty-five different fishpasses were tested in this study, and based on enerqy dissipation the dimensions and qeneral arrangements were determined. The Committee's intention to conduct tests with prototypes was stopped due to the onslauqht of World War II.

McLeod and Nemenyi continued this work at Iowa University (1939-41) and tested the fishways with fish. At this time there were no model studies with fish on record. The water for their prototype testina was taken from the Iowa River and the fish used were actually migrating up the river. The types of ladders tested were:

(1) Pool and overfall
  (a) straight overfall
  (b) notched overfall (one side and alternate)
(2) Pool and submerged orifice
  (a) abrupt jet deflection
(3) Paired-obstacle baffled fishways
(4) Alternate-obstacle baffled fishways
(5) Modified Denil fishways

Results of these studies led to recommendations for new designs and concepts concerninq energy dissipation.

Pacific Northwest Developents

With the construction of the Bonneville Dam on the Columbia River in 1937-38 the development of fish facilities was forced to reach a climax, because the preservation of the anadrotnous fish was deemed essential to the

economy of the Pacific Northwest reqion. The U. S. Fish and Wildlife Service and the Fisheries agencies of Washinqton and Oreqon were responsible for the hydraulic and bioloqical details of the fish passage facilities. The initial Bonneville ladders were 35 feet wide, with standard overflow-weirs and submerged orifices on a line adjacent to each wall (see Fiq. 14). This ladder is similar to the ones tested by McLeod and Nemenyi (1939). They suqqested that submerged jets on a centerline should be avoided, and that they should he staqqered. Rut in the McLeod and Nemenyi study, the orifice openings were 40 to 50 percent of the baffle width, whereas the Bonneville ladder orifice openinqs are only about 10 percent of the baffle width.

In 1914, due to construction of a railroad, a large rock slide occurred in Hell's Gate canyon on the Fraser River in British Columbia. The accumulation of rock and debris partially blocked the upstream passage of the larqe runs (2,400,000) of sockeye salmon. This situation was approached by the International Pacific Salmon Fisheries Commission (Clay, 1961). The site required a new application of fishway principles, because conventional step-type ladders could not handle the daily six-foot fluctuations in water level.

The fishwav developed for this situation, the vertical slot baffle (see Fiq. 15) was desiqned so that the flow from the two slots met in the center of the fishway to dissipate the energy. Otherwise the length of the pool would have to he used for enerqy dissipation, thus increasing the cost siqnificantly. This was the first recorded instance where fishway dimensions were determined from the volume of fish required to accommodate peak runs. A volume of two cubic feet of water was used as the minimum requirement for each fish. For the application of this new fishway to smaller runs, the desiqn was halved along the centerline. Because of the loss in symmetry the jet energy dissipation takes place in the corner of the pool. To adjust for the tendency of the jet to turn directly downstream towards the next slot, the baffle dimensions were adjusted and a sill was added (up to 12 inches in heiqht) across the slot on the fishway floor. This fish ladder has proved very successful in fish passage and is still preferred today by most fishway desiqners of large and small facilities.

After Hell's Gate, proposals to build more dams on the Columbia river were the main stimulus for fishway research. The absence of definite criteria or standards for use in large fishway system desiqns prompted the Corps of Enqineers to initiate a program of fisheries research in 1951. This proqram has provided bioloqical information on fish and their capabilities, and in 1962 developed the Ice-Harbor fishladder for the newly constructed Ice Harbor Dam on the Snake River (see Fiq. 16). The main difference between this type and the standard overflow weir with submerqed orifices is the addition of a vertically extended center portion of the weir wall. This extended portion, with short winq walls projectinq upstream, danpens oscillations which produce transverse waves across the full width overflow weir, as was shown in Fiq. 14.

Since the development of the Colunbia River dams fishway design emphasis has been limited to small projects. One earlier innovation which occurred in the early 1960s was developed by Gil Ziemer of the Alaska Department of Fish

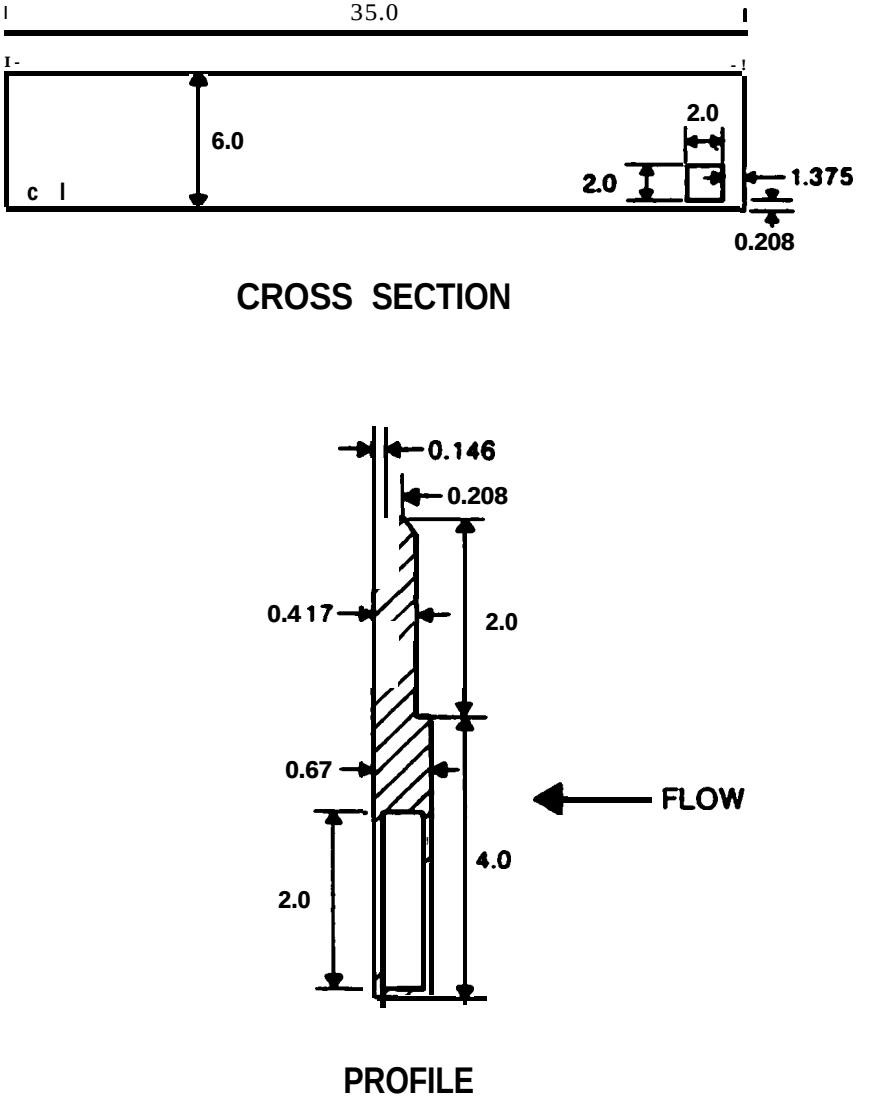

Figure 14. Initial Bonneville overflow weir and submerged orifice ladder. (dimensions in feet)

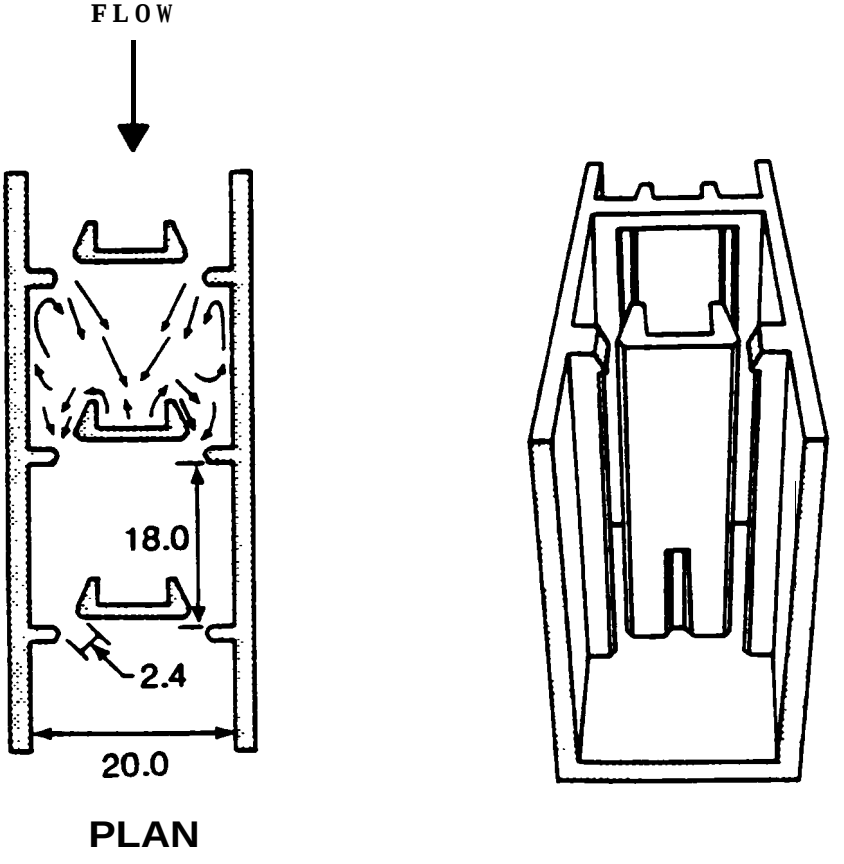

Figure 15. Hell's Gate double-slotted fishway on the Fraser River in British Columbia. (dimensions in feet)

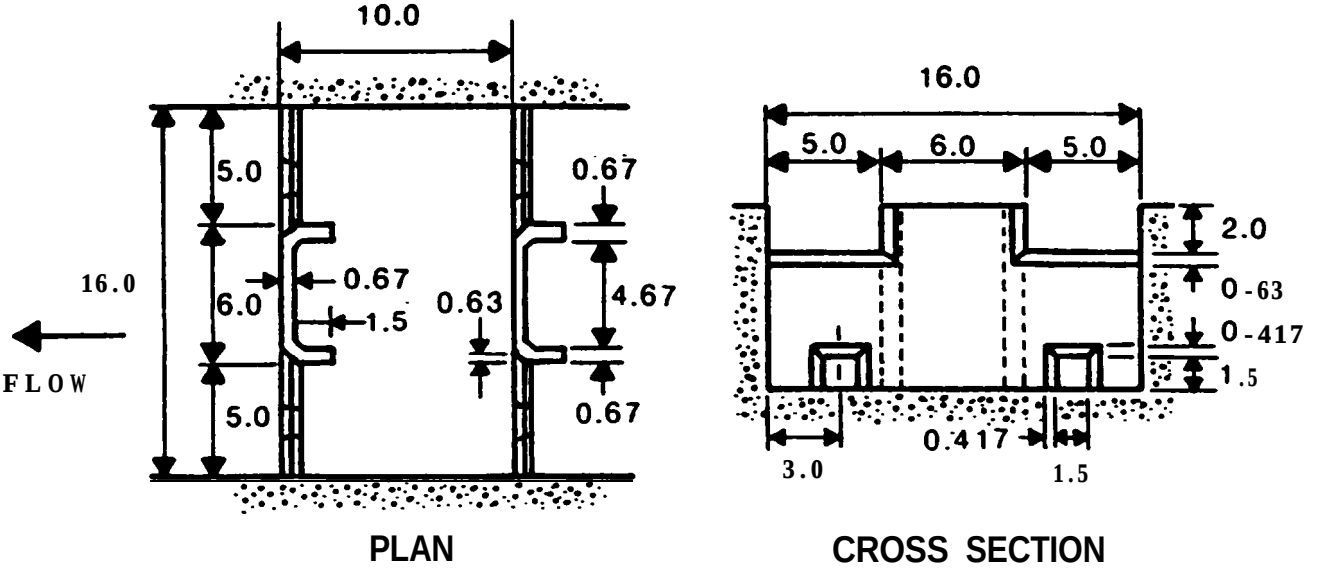

Figure 16. Ice Harbor fishladder design with double weir and double port. (dimensions in feet)

and Game. This fishway is constructed of aluminum and is lightweight, corrosion resistant and an excellent energy dissipator. It was desiqned to specifically meet the needs of passaqe problems in remote areas with access only by air. The side baffles are similar to models tested by McLeod and Nemenyi usinq the modified Denil Type No. 6, as shown in Fiq. 17.

Another type of fishway developed in 1976 is the Aeroceanics spiral fishway (see Fiq. 18). It is constructed of fiberqlass reinforced plastic with alternating vertical baffles projectinq 0.75 feet into the channel. Like the Alaska steeppass fishway, the Aeroceanics fishway consists of sections which are liqht enouqh to be helicoptered into remote areas. These two fishways are examples of the onqoinq search for a low-cost, liqht-weight fishway. Another circular fishway is under development which uses slots for flow control. Further information is not available at this time. One of the major construction benefits of circular fishways is that they are space and foundation efficient.

A DOE study by Truebe and Drooker (1981) contains very comprehensive data on a number of smaller fishway applications and construction options. A unique pipe fishway was installed throuqh the dam at Helena Lake in British Columbia (Smallwood, 1982). The end of the pipe fishway in the reservoir is mounted on a float which adjusts the gradient on the fish pipe as the reservoir fluctuates as shown in Fiq. 19.

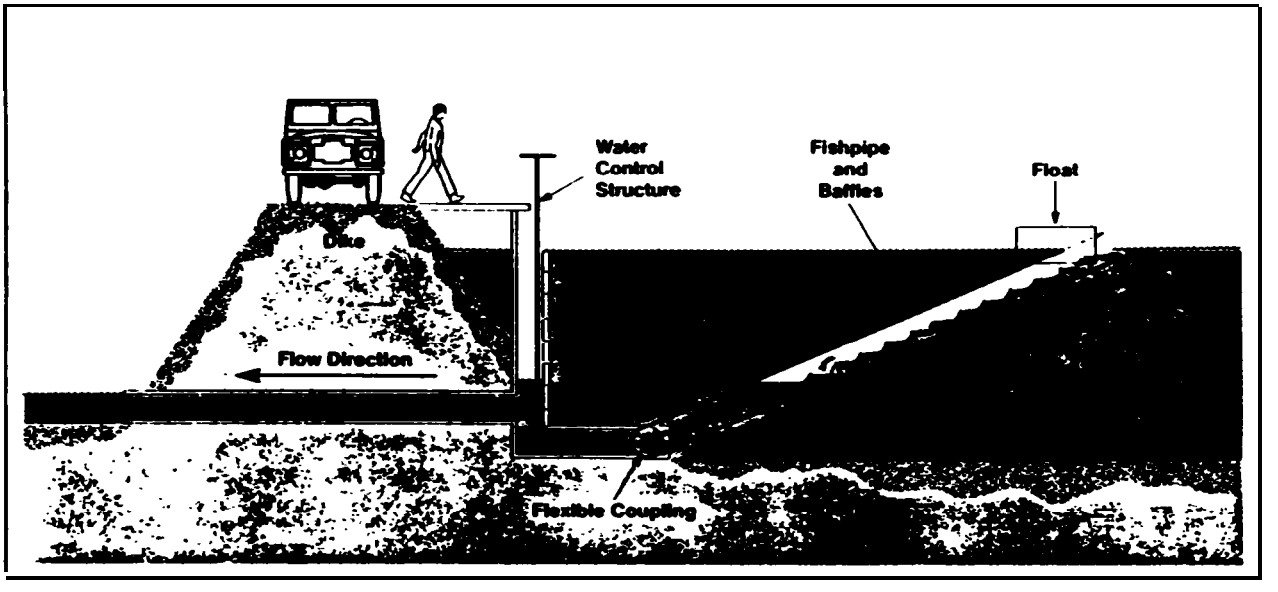

Figure 19. Pipe fishway for trout at Helena Lake, British Columbia.
(Used with permission of Ducks Unlimited, Sept./Oct., 1982, p. 15)

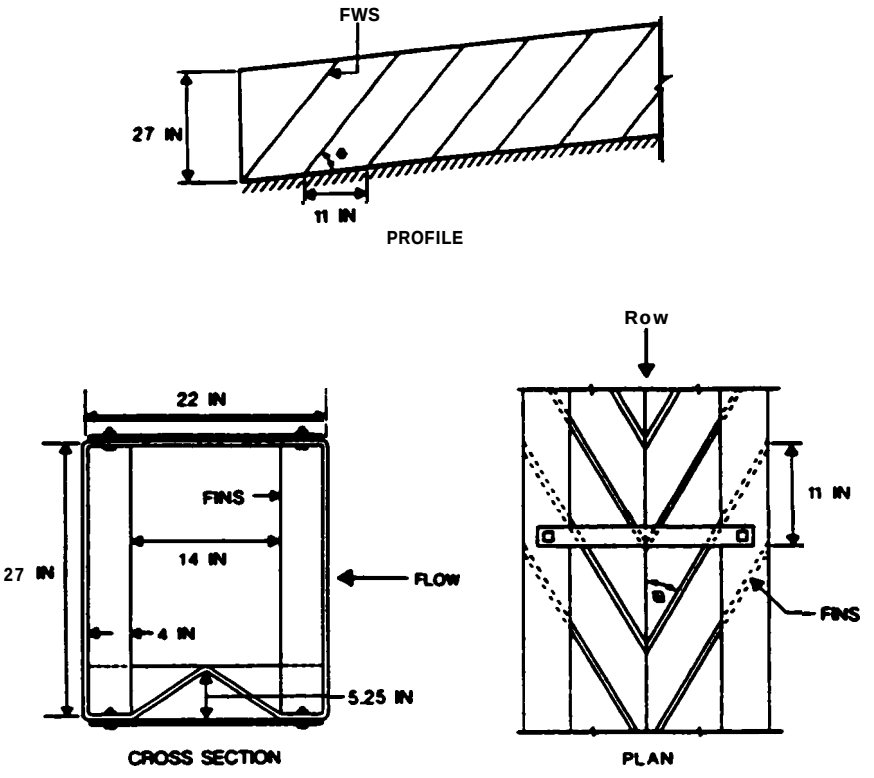

Figure 17. Type A, Alaska Steeppass/Denil No. 6 Fishway.

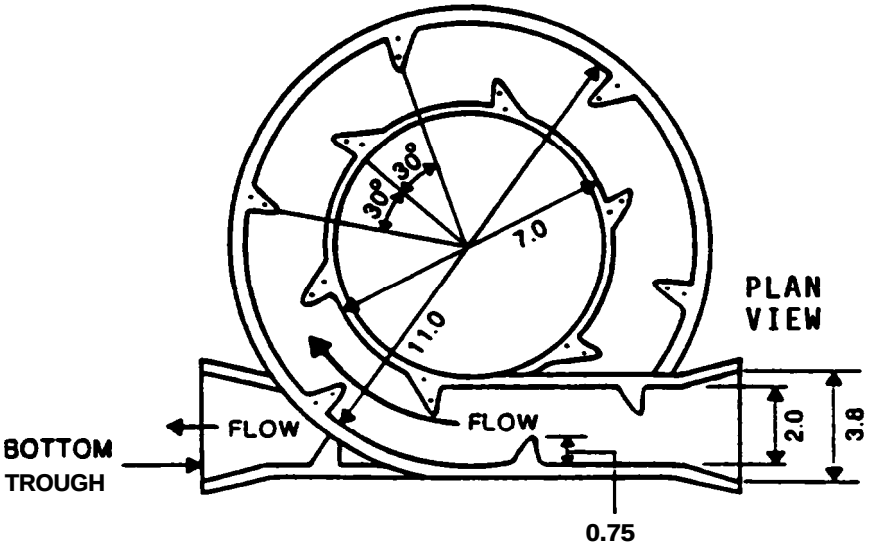

Figure 18. Aeroceanics spiral fishway. (dimensions in feet)

Based on preliminary test results, one of the most effective fish elevators appears to be the Warner "Fishlift." Its qeometry and operational procedures are displayed in Fig. 20. The photograph on the left shows the 1982-85 test arranqement at Cariboo Dam on the Brunette River near Burnahy, British Columbia, just south of Vancouver.

The "Fishlift" system operates by raisinq and lowerinq a column of water, with the fish being raised or lowered in the upper few feet of water, and supported by a wire-mesh floor. The fish underqo no pressure chanqe, and two units can be intertied to operate alternately off the same water supply system, thus reducing possible delays due to interrupted operation. The facility was modified to handle downstream migrating smolts in 1985 with "100% passage success."[1]

Fishway design has evolved over a period of 75 years. Biological data that was not available 75 years aqo are now documented. Except for accurate leapinq abilities of salmon and trout, swimminq speeds and the ability to sustain these speeds have been determined (Bell, 1984). Fishway design at the present is leaning towards smaller, low-cost facilities that do not require the excessive amounts of water that many of the present fishways do. Part of this impetus for water conservation in fishway desiqn has come from the recent development of many small-scale hydroelectric projects and proposals for other small-scale sites. An economic incentive is present in all design considerations, but the most important design feature in any fishway system should be the expeditious transport of fish past the barrier that is blockinq or delayinq their upstream migration.

1 Warner, J., 1985. Personal communication.

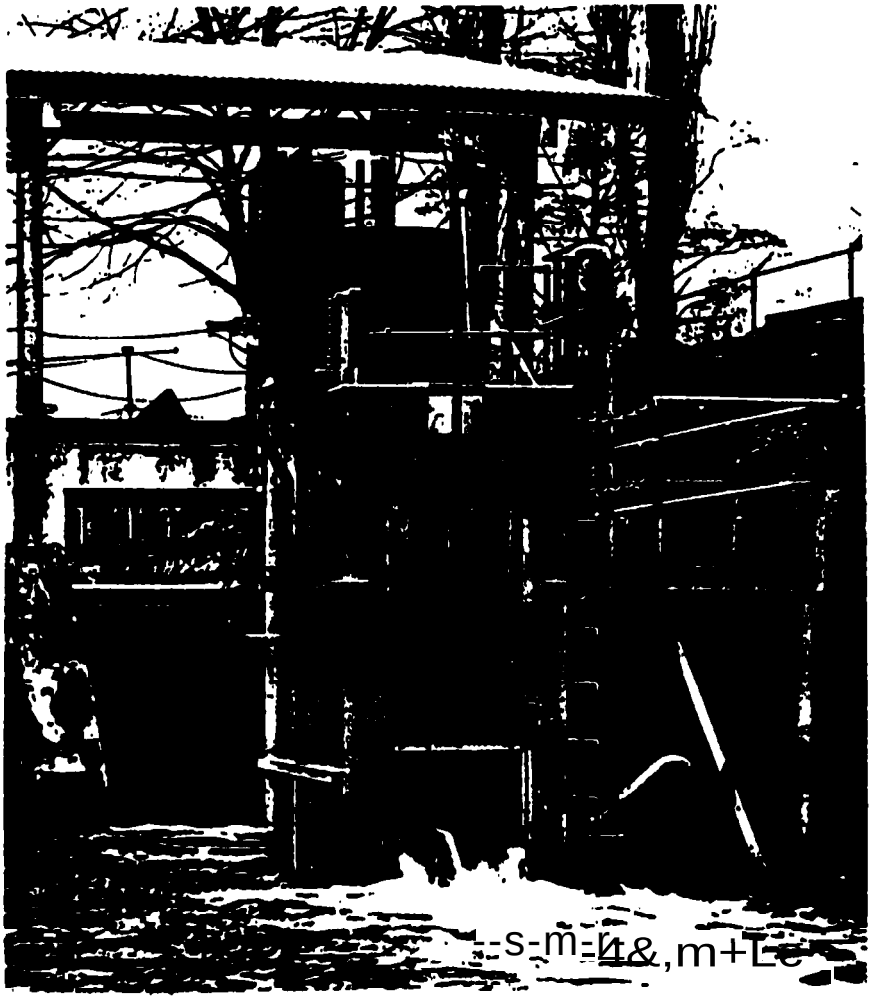

Figure 20. Warner Fishlift installed at Cariboo Dam on the Brunette River near Burnaby, British Columbia.

Used with permission of Warner Fishlift Ltd.

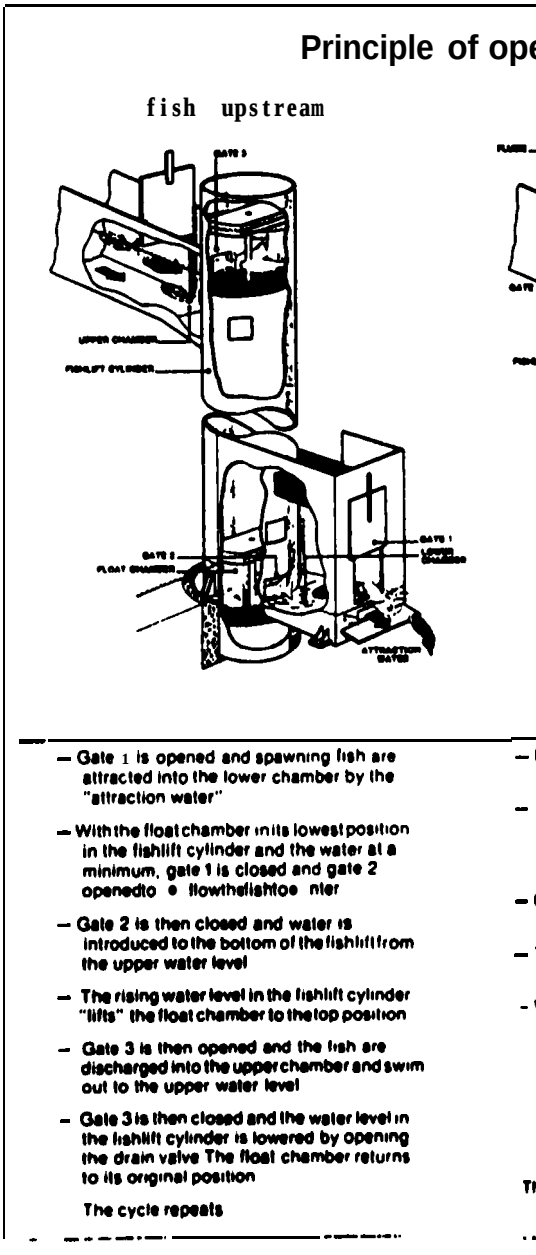

FISHWAY CLASSIFICATION

This report will classify fishways three ways: 1) fish ladders including chutes, 2) culverts, and 3) fish locks and elevators. Each of these is a system used to pass fish through or over a natural or manmade barrier. At large hydroelectric dams, the fishway consists of three major components: the entrance, passage, and exit sections. Because chutes usually connect pools, they can be a form of fish ladder, but with larger steps. Culverts which are installed at stream road crossings can pose problems to upstream fish migration through: (1) poor entrance conditions, (2) high velocities and shallow depths in the culvert barrel, and (3) steep exit conditions due to culvert differential and/or rock accumulation at the entrance. Culverts form one of the major groups of barriers to upstream migration and are one of the most critical types of fishways to design. Therefore, they are thoroughly addressed in Part 4 of this project report (Orsborn and Powers, 1985). Locks and elevators are used at a few dams to mechanically transport the fish over the obstruction, but are mechanical and intermittent in operation.

1. FISH LADDERS

Entrance Conditions

As noted in many publications on fishway design, the fishway entrance is the single most important part of any fishway system. This is especially true at hydroelectric projects where large flows from the draft tube and spillway can obliterate the relatively small attraction flow from the fishway.

In the early 1950s, part of the Corps Fisheries Research Program investigated which water velocity was most suitable for entrance attraction. Two criteria utilized were the swimming ability of the fish and the response of fish to a choice of velocities. Fish were allowed to choose between a higher and a lower velocity in each test. In almost every case, a greater percentage of the fish tested entered the channel of higher velocity. Even when the fish were swept back after failing to pass through the test flume they selected the higher velocity on their second attempt. Collins (1951) showed that even with a velocity of 13 fps, 80 to 90 percent of the salmon and steelhead preferred the higher velocity compared to a lower velocity of 3 fps. This study is analyzed further in a later section of this report on the analysis of attraction velocity.

Two factors to be considered in the design of fishway entrances are their location and hydraulics. The following is a list of general recommendations abstracted from the literature on fishway entrances.

Entrance Location

At hydroelectric plants, the main fishway entrance should be located alonq the shore or between the spillway and powerhouse at the farthest distance upstream (Clay, 1961). This is true for almost every barrier confiquration.

The powerhouse collection system should extend over the entire lenqth of the powerhouse with openinqs over each unit (Clay, 1961).

The attraction water should form a riqht anqle with the direction in which the river flows and be situated just downstream of the point where the turmoil of the water falling over the weir finishes (Deelder, 1958).

Entrance Hydraulics

Attraction velocity should be 4 to 8 fps, preferably in the 8 fps ranqe (Bell, 1984).

Cross velocities should not exceed 2 fps (Bell, 1984).

Auxiliary water velocity should be in the 0.25 to 0.75 fps ranqe (Clay, 1961), when it issues into the entrance chamber.

Approach flow should be parallel to the axis of the entrance weir, or at least no greater than 25 percent to the axis of the main current (Mahmood, 1972).

Entrances to powerhouse collection systems should be vertical, adjustable orifices 2 feet wide by 5 feet hiqh located at a depth of 3 feet (Thompson, 1967).

Attraction (stream) should be 7 feet deep by 10 feet wide extendinq 50 feet into the bay for large dams (Corps, Charles River, 1977).

Denil-type ladder entrances should be submerqed to a depth of 2.5 feet (Slatick, 1969).

As can be seen from the above summary about fishway entrance conditions, most of the published literature is on larger structures where they are so difficult to manaqe.

Ladders can be classified into four types: 1) pool and weir, 2) pool and orifice, 3) vertical slot type, and 4) chute type. Chutes are equivalent to steps in a ladder as fish travel from pool to pool, while using swimminq as their mode of transport.

Examination of the Pool and Weir/Orifice Types

For classifying ladder types, the pool and weir and pool and orifice will be combined because many combinations exist, such as the Ice Harbor ladder. For the purpose of this report, pool ladders will be classified as shown in Table 3.

Table 3. Pool and Weir, and Pool and Orifice Types

A	Notched overflow with submerged orifice
B	Straight overflow with submerqed orifice
C	Notched overflow without submerged orifice
D	Non-overflow with submerqed orifice

Weir and orifice type ladders present the fish with two routes of passage--either swimming through the orifice, or by swimminq or jumping over the weir. Fig. 21 is a diaqram of pertinent dimensions which apply to these types of ladders. The dimension locates the center line of the over flow section. Table 4 is a matrix of accepted design factors which apply to pool type ladders. The desiqn of the baffle wall is straight forward, but the shape of the weir crest and the shape and placement of the orifices are important features which require more detailed consideration.

Most desiqners warn that sharp crests should be avoided because the fish miqht be injured, but a well desiqned weir should allow the fish to pass without contactinq the weir. Tests done by the Corps of Enqineers have resulted in a beveled weir crest shown in Fiq. 22. This crest was found to dampen oscillations which were present with the flat, square weir crests. Most of the dams on the Columbia River have incorporated the beveled crest. The Institution of Civil Enqineers Committee on Fish-Passes in 1936 experimented with ten different weir crest profiles, and concluded that no special attention need be qiven to this, but that a semi-circular cross-section is very satisfactory.

In Scotland, where there is a noticeable preference for pool and weir type ladders, Menzies (1934), suggests a weir crest with a downstream curve like a wave section (see Fig. 23). This crest shape is desiqned to produce a solid unbroken body of black water qlidinq into the pool below with a minimum of disturbance to itself and the pool. The weir-section shape sugqested by Menzies is similar to one recommended by Sedqwick (1982). He noted that weir shapes should be downward curving with a rounded base as shown in Fig. 24.

Submerged orifices were introduced to control the depth of flow over the weir crest, while limitinq the total volume of water flowinq throuqh the pass. The Committee on Fish Passes (1942) suqqested that the dissipation of a submerqed jet beqins along the surface of the unbroken jet; hence, a considernhle lenqth of pool is necessary. They also sugqest that the orifice should be converqent (i.e., inlet = 1.4 outlet), the inlet bell-mouthed, all

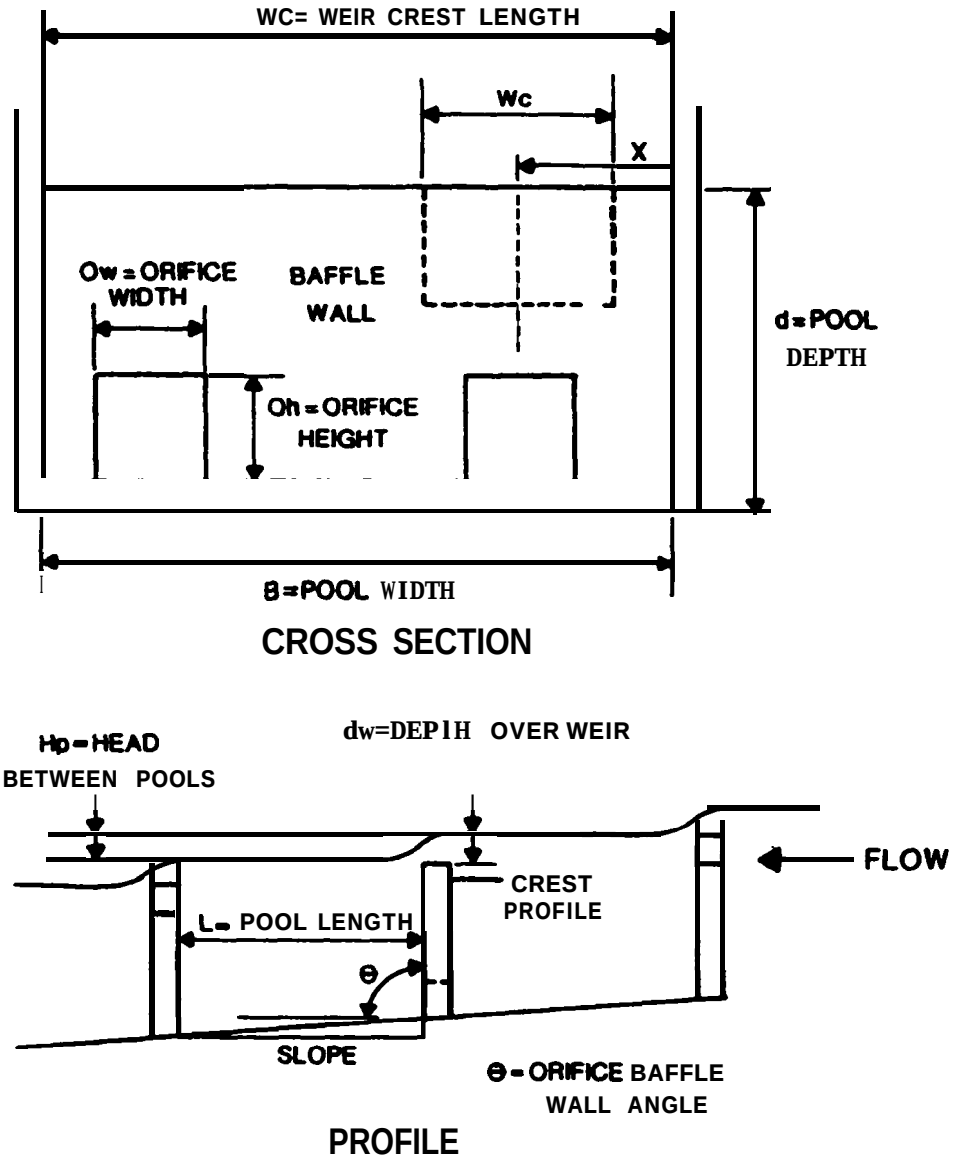

Figure 21. Nomenclature sketch for weir and port fishladder.

Table 4. Summary of design criteria for pool and weir/orifice fish ladders for use

Designer or Author (Type)	Hp (ft)	Q (ave) (cfs)	V (ave) (fps)	dw (ft)	Pool Space	Wc (ft)	(feet) Oh	Ow	Pool Dimensions L(ft)	B(ft)	d(ft)	Weir Shape
Menzies (1934) (Type C)	1-2.5	5-6	Near sea 6.5-8 Away sea 5-6.5						14-15	9-10		Trapezoidal
Bonnyman (1958) (Type D)	1.5	39	10				2.25 diameter		17	10		
McCloud & Nemenyi (1939)[a] (Type A & D)	0.75			0.33-0.50			1.0	0.83	3	2.5	3	Rectangular
Committee on Fish Passes (1942) (Type C)	1.5(max)	12	8(max)	0.75 (min)		2			10	6	4	Rectangular
Committee on Fish Passes (1942) (Type D)	2(max)	24					1.5	1.5 length = 3-4.5'	10	4	4	
Decker (1946) (Type C & D)	1(max)						1.0	0.83	5-8	5-8		Cipolletti
Fisher (1964) (General)	1 - strong swimmers 0.6 - 0.75 (pink,chum)		4-8		4 ft^3 fish				From Pool Space	From Pool Space	2(min)	
Ziemer (General)	0.75-1	= pool cross sectional area	3-8 1(resting)	0.5-1	4 ft^3 fish		1.0	0.83	10xHp	2.5xHp	3xHp	
Sakowicz (1962) (General)	1.3-1.6 (salmon)	35	9(max)			2.6	1.6	1.6	16.4	9.8	2.6	
Rizzo (1969) (Type A)[b]	1	$\frac{4 \text{ ft-lbs}}{\text{sec ft}^3}$	3-8	1					14-18	10-13	6.5	Rectangular
Bell (1973)[b] (Type A)	1(salmon) .75(shad)	$\frac{4 \text{ ft-lbs}}{\text{sec ft}^3}$	2-8 fps	1(salmon) .5(trout)	0.2 ft^3 lb fish	B/2	1.5	1.25	8-20	6-20	6	Rectangular

NOTES: a) Test Fish from Iowa River (species: carp, shad, quillback, catfish, herring, perch, and buffalo fish)

b) Ice Harbor Type

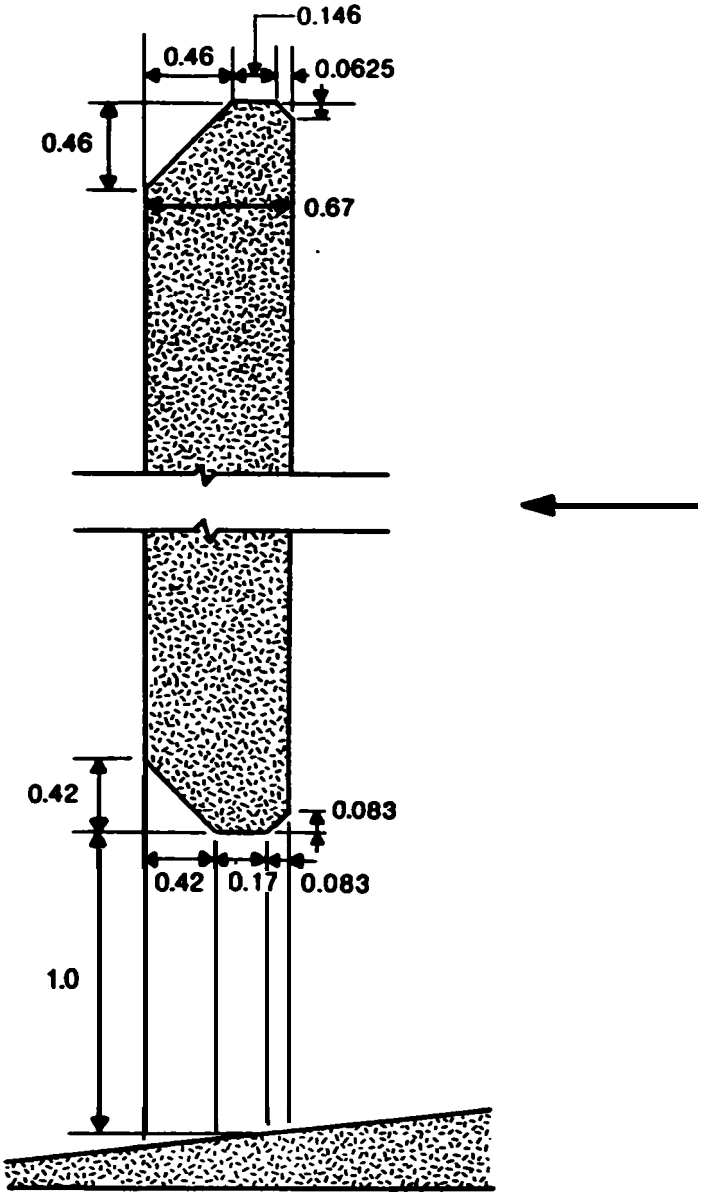

Figure 22. Section through Corps of Engineers beveled weir crest and port. (dimensions in feet)

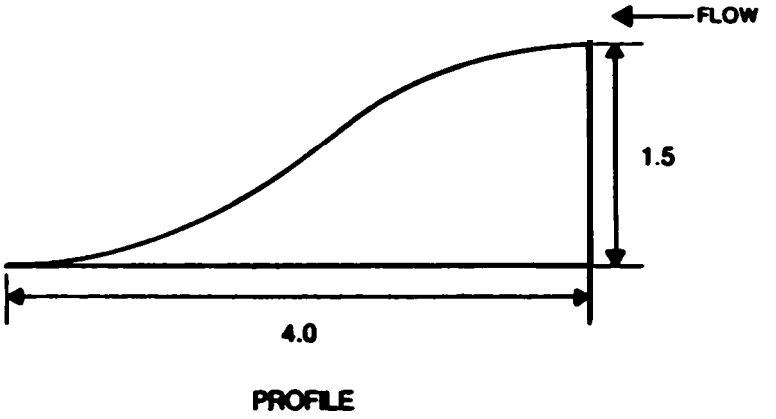

Figure 23. Profile shape of weir floor suggested by Kenzies (1934). (dimensions are in feet)

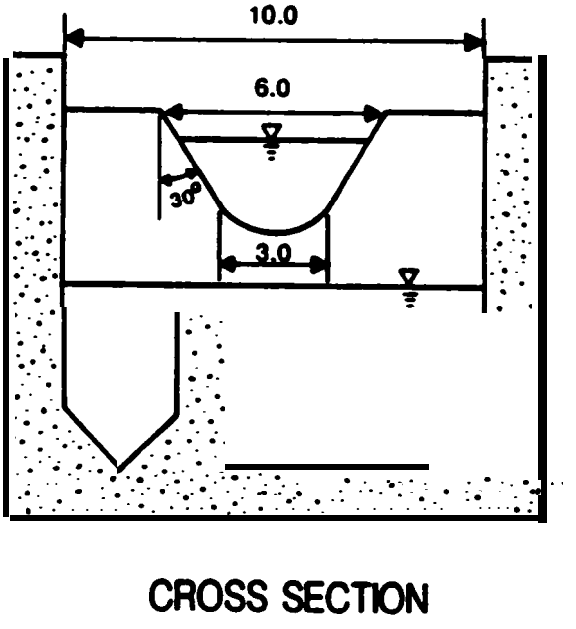

Figure 24. Cross section of weir with circular base and flared top similar to WSU weir design (see Project Report Parts 1 and 2). (dimensions are in feet)

edges rounded to a smooth surface, and the orifice sloped downward at an anqle of 45 degrees to the horizontal (see Fig. 25). McLeod and Nemenyi suggested an orifice arrangement where the baffle wall is sloped 55 degrees downstream from the ladder bottom, and the orifices are in the middle on a center line as shown in Fig. 26. This type of arrangement has been given the name "abrupt jet deflection" as the jet is deflected onto the floor of the ladder at a 35-degree angle. Decker (1956) suggested a ladder identical to McLeod and Nemenyi's. Neither of these publications suggest a shape for the orifice and it is assumed that they used a square opening without rounded upstream edqes. Orifices on the Columbia River ladders are square openings with the upstream and downstream sides beveled similar to the beveled weir crest shown in Fig. 22 at 45 degrees.

Another orifice arrangement is a type of inclined cylindrical or pipe-type orifice (Clay, 1961) which has been used in Scottish fishways (see Fiq. 27). The length of the cylinder recommended is about 1.5 to 2.0 times the pipe diameter. The preference for this type was confirmed through a Fish Ladder Ouestionnaire response from Scotland (Sedgwick, 1982), in which he noted this was a successful underwater orifice type of ladder for passing salmon.

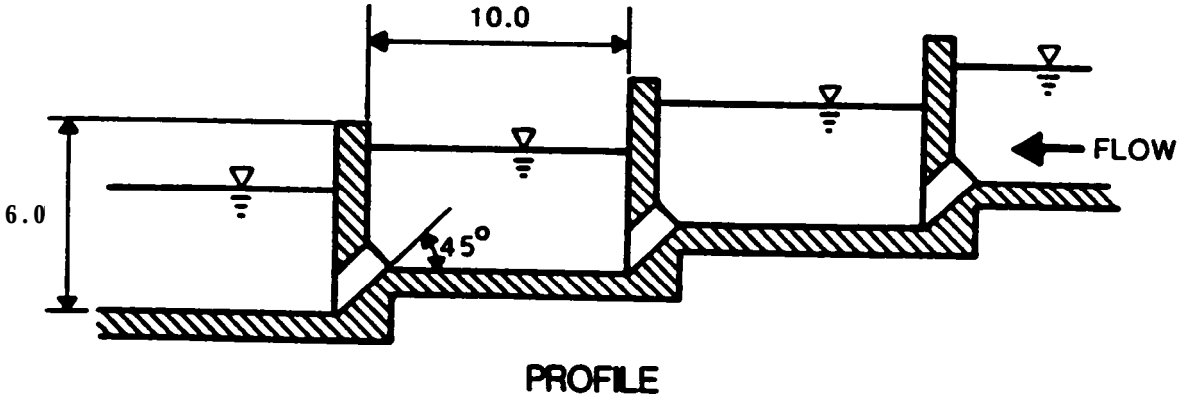

Figure 25. Orifice-tube fishladder sloping down at 45" as developed by ICE Committee on Fish Passes (1942). (dimensions are in feet)

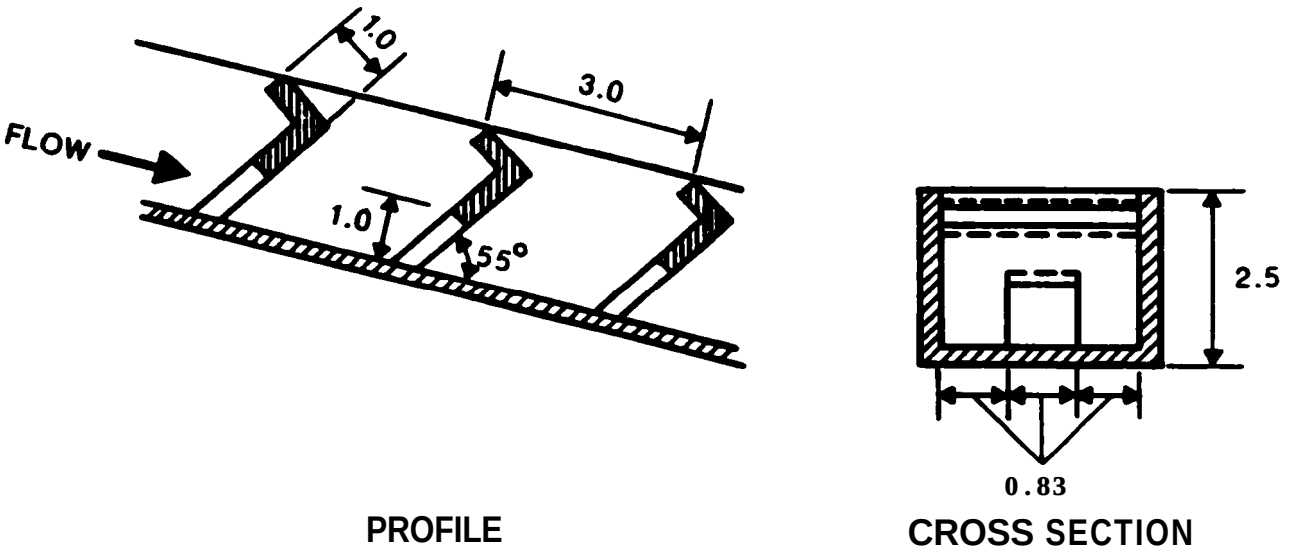

Figure 26. Sloping, centerline-orifice fishway developed by McLeod and Nemenyi (1939-40). (dimensions are in feet)

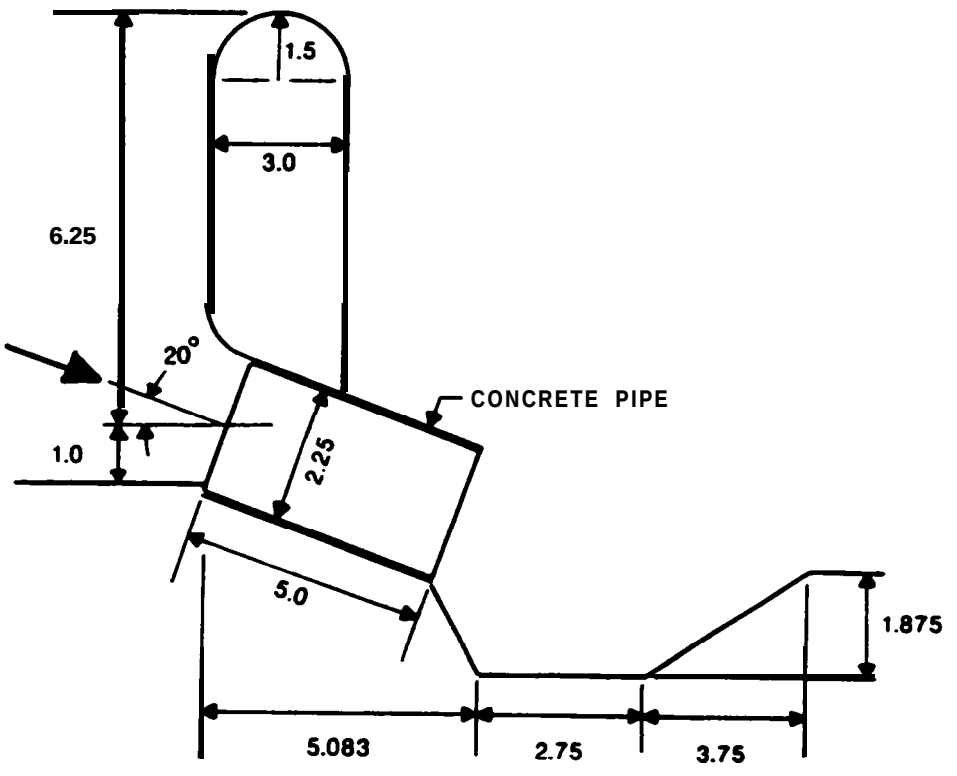

Figure 27. Inclined pipe orifice fishway. (dimensions are in feet)

In Russia, a design providing a conical qrating guide on the upstream side of the orifice has been developed by Antonnikov (1964). Two orifices work in combination with a straiqht overfall-weir wall (Type B) ladder. This type of orifice lends itself to debris problems, and when clogged acts as a solid, conical opening. Another type of opening was developed by Michel and Nadeau (1965), et the Lava1 University Hydraulic Laboratories. This orifice has a Borda mouth piece (parabolic) opening. It is supposed to duplicate the flow conditions chosen in nature by salmon and trout as they progress upstream resting behind stones in the stream bed. This orifice is combined with a non-overfall baffle (Type D) ladder, and was installed in the Nabisipi River in France. It is reported by Mahmood (1972) to be working satisfactorily.

Vertical Slot Type Fishway

There are two types of vertical slot fish ladders used: 1) paired vertical slot (the original Hell's Gate design), and 2) single vertical slot (see Fig. 28). the latter being a half model of the first and in more common use. Table 5 includes design factors from Clay (1961) and Bell (1984). This fish ladder allows fish to pass at any depth, and adapts well to fluctuations in the water level.

Table 5. Vertical Slot Fishway Dimensions and Criteria

Publisher	Ws	HP	Pool Space	Pool Dimensionsa L	B	d	Hf
Clay (1961)	12" (min)b 6" (min)c	12" 9" (pink, chum)	2 ft^3/fish	10'	8'	f(Q)*	12" (optional)**
Bell (1973) (1984)	12"	12" (max) 24"	0.2 ft^3 per lb. fish	10' 16.5'	8' 10'	f(Q)	(optional)

Notes: a) Pool size = f (slot width): see nomenclature in Fig. 28.
b) Salmon 5 lbs. or more.
c) Salmon or trout 2 lbs. or less.

*f(Q): Function of fishway flow.
**Floor sill has been found to be helpful in preventing fallback.

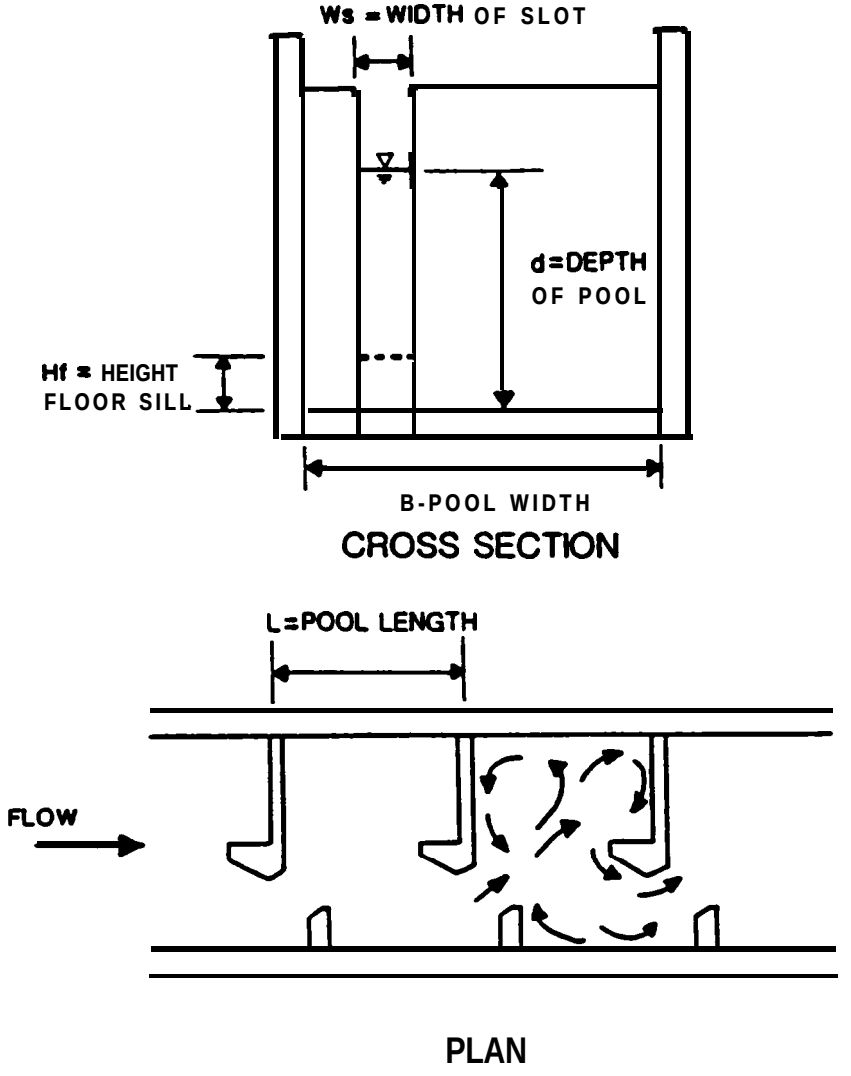

Figure 28. Nomenclature sketch for slotted fishways showing single slot type.

The most critical dimension in this type of ladder is the slot width. This is a function of the fish size, and once determined, allows determination of pool size for proper energy dissipation.

When a vertical slot ladder is installed at a natural barrier the route of ascent presents a path that was not available before the ladder was installed. Therefore, predatory species which are usually weaker swimmers, can now negotiate the falls or rapids and are introduced into the newly opened spawning grounds.

Chute Type Fishways

The function of a chute type ladder is based on the original work done by Denil in 1908 in which baffles acted as roughness elements to reduce the flow velocity down the chute. Two distinct types recommended in the design literature are: 1) the one developed by the Institution of Civil Engineers (ICE), Committee on Fish Passes (1942), and 2) that developed by the Alaska Department of Fish and Game under the guidance of Gil Ziemer (1962).

The ICE Committee on Fish Passes tested 25 baffle types and selected the most practical (see Fig. 29). This type is also recommended by Fisher (1964), and Decker (1956). The accepted design dimensions are included in Fig. 29. The maximum suggested length for a 1:5 slope is 30 feet. Continuous flow is obtained at a velocity of 6 fps and a flow rate of 21 cfs. This produces a depth of 3 feet. Ten cfs would produce a depth of two feet. For this type of chute, the maximum recommended change in water level is 12 inches. To provide for greater variation of water level, the Committee suggests a deep narrow channel fishway, as devised by Denil, with only side baffles of herring bone form. This type has been constructed at a natural barrier on the Pacific Coast by the Washington State Department of Fisheries on the Coweman River. A study done by Clausen and Floodeen (1954) suggests that the deep narrow channel type works best with the entrance rounded to decrease the contraction of the jet which produces drawdown at the water entrance, and in turn increases velocities. The rounding produced a full channel width flow imnediately upon entering the chute.

The Alaska Department of Fish and Game in the early 1960s developed the Alaska Steeppass fish ladder (see Fig. 30). The baffle configuration is the same as that developed by McLeod and Nemenyi (1939), modified Denil No. 6. McLeod and Nemenyi suggest construction of either concrete or wood, but the Alaska steeppass is an aluminum, corrosion resistant, pre-fabricated, light-weight channel in 10 foot units. Each unit weighs 55 pounds per lineal foot. The estimated maximum number of fish that can pass is 750 per hour. The velocities range in the 3-5 fps range, with a full discharge of about 9 cfs , depending on the depth of the unit. Slopes vary from 20-35 degrees. Four models have been developed. Table 6 is a comparison of (0, downstream) horizontal angle of the fins and (Q) upstream vertical angle of the fins. Velocities in the Model (or type) A steep pass range from 2.8 to 3.3 fps for a

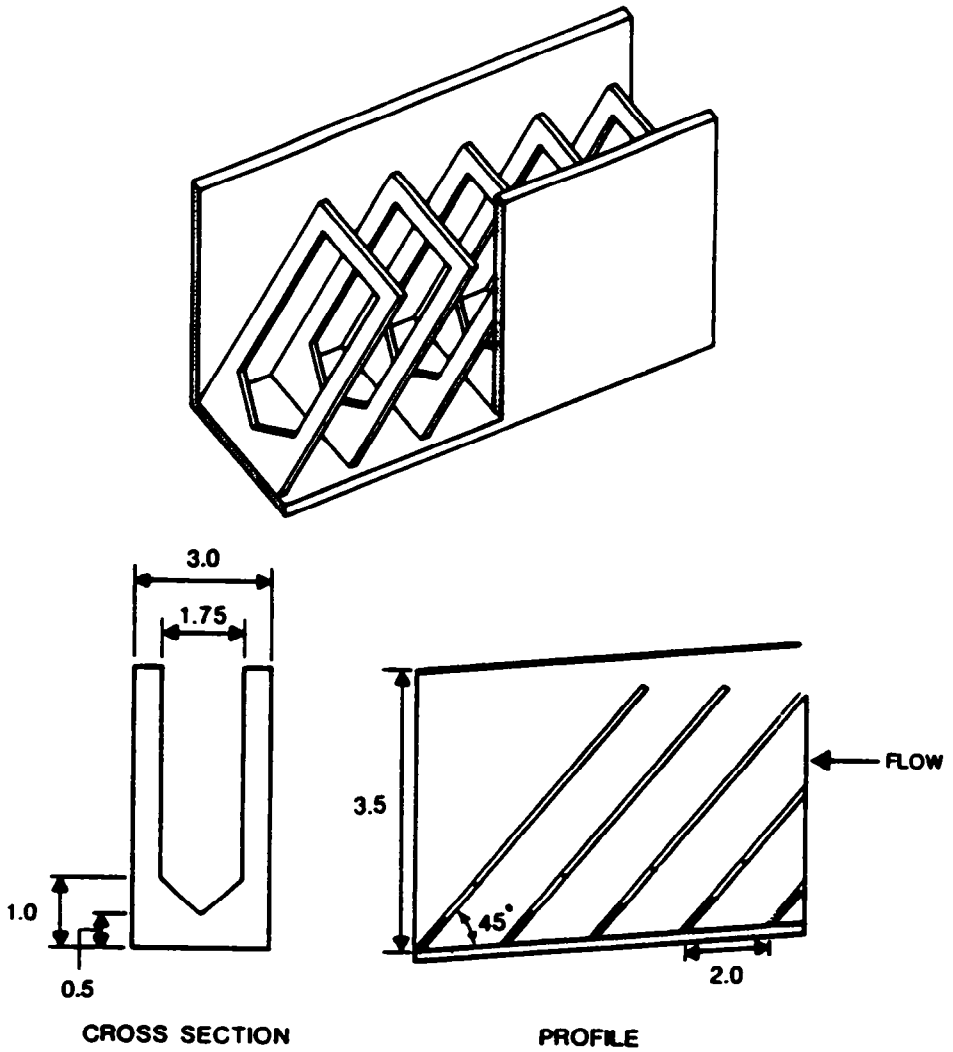

Figure 29. Institution of Civil Engineers modified Denil Fishway. (dimensions are in feet)

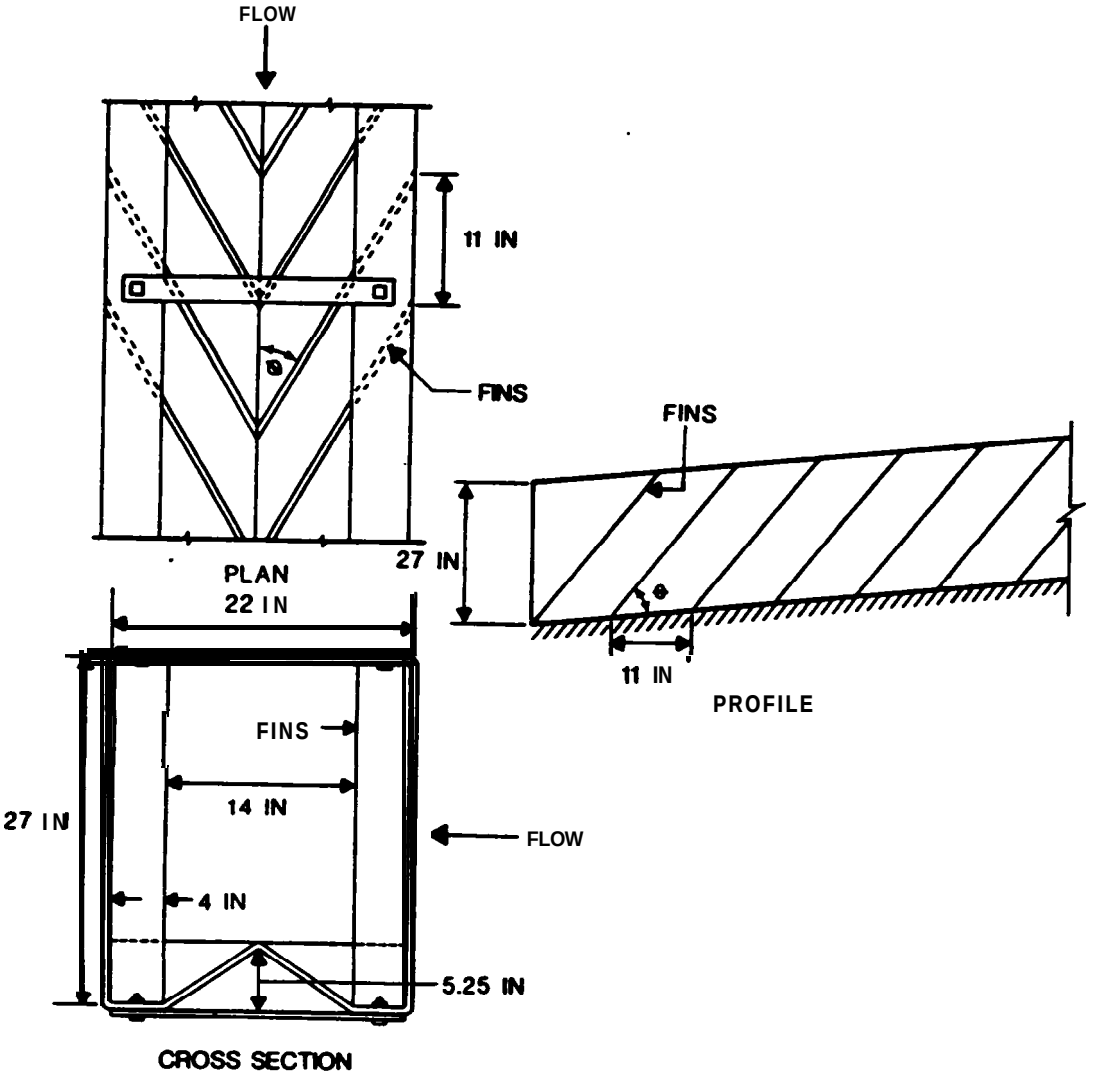

Figure 30. Typical dimensions of Alaska Steeppass (ASP) Fishway.

slope of 20-35 degrees, and 4.1 to 4.5 fps for the same slope in model C. Model C was developed to reduce the air entrainment and turbulence present in model A. Because of the high velocities obtained in the model C, the vertical angle of the fins was adjusted back to 77.5 degrees, which is the model D.

Table 6. Summary of Steeppass Floor and Side Fin Angles

Alaska Steeppass Model	Floor Fin Angle Phi, 0, degrees	Side Fin Angle Theta, 0, degrees
A	45	90
B	45	Variable
C	45	45
D	45	77.5

The Department of the Environment, Fisheries Service of Canada has increased the depth in the model C steeppass by 2.0 feet in order to accammodate a greater headwater range. Hydraulic test results have not been published on these deeper units.

Exit Conditions

When fish exit a ladder, whether it be at a natural obstruction or a dam, the main concern is for fish being swept back downstream (a type of external fallback). Studies at Ice Harbor Dam on the Snake River in 1962 (Corps of Engineers, 1966) showed that 18.7 percent of the north ladder upstream migrating fish fell back through the spillway during a period of low river flow compared to 3.5 percent of the south ladder fish. The north ladder exit is 150 feet from the spillway and the south ladder exit is 1100 feet from the nearest spill gate. At a higher flow situation fallback increased.

The National Marine Fisheries Service in 1979 developed a list of criteria which apply to the fish ladder exit section. These are:

1. Avoid exit location next to spillway or powerhouse intakes. Extend exit upstream if necessary to avoid fallback;

2. Avoid locating exit in stagnant area where water quality may be poor; it should be located in area of positive downstream flow;

3. Exit should have a trash boom and/or trash rack:

Trash rack--Vertical bars 8 inches clear minimum spacing (Chinook):

--Horizontal bars 18 inches clear minimum spacing;

--Cleaned by rake:

4. Provide structural freeboard to prevent flood damage;

5. Provide stoplogs or a closure gate for ladder maintenance and dewatering;

6. Exit water depth--4 feet minimum,
--6 feet preferred;

7. Maximum exit velocity at low forebay should be 2.0 fps.

In large fishway systems such as the ones on the Columbia and Snake River Dams, the exit section of the ladder is used to regulate the flow entering the ladder. This is known as the control section. Devices used consist of stoplogs, adjustable height weir gates, tilting weirs and combinations of different sizes of orifices and slots. Orifice control sections were introduced in the 1960s in the Columbia River fishways. The facilities were intended primarily for salmon and steelhead trout, but numerous shad, and scrap fish with less enerqy capabilities and different swimming habits would not use the submerged orifice opening and the ladder pools became over crowded.

In 1969, studies at the Bonneville Fisheries-Engineering Research Laboratory resulted in the design of two vertical slot type baffles (see Fig. 31) for control sections. These have been used successfully on the Columbia River dams (Washington), Connecticut River dams and the Charles River dam in Massachusetts. The baffle walls have varying orifice sizes and slot floor sill heights which regulate the flow and, along with the auxiliary water, provide a constant ladder discharge as forebay elevations vary.

At the Lower Granite dam on the Snake River, the control section consists of Type C baffles with nine pools, each 16 feet long. The sill height starts at six inches and increases by six inches with every pool upstream. This accepts a forebay elevation change of five feet. At the downstream termination of this control section, the addition of water through a diffusion chamber maintains a constant flow of about 72 cfs through the overflow weir and submerged orifice section (Ice Harbor Type).

2. CULVERTS

A culvert is a conduit used for conveying water through an embankment. The embankment may be for a highway, railway, street, dams, or levee. the manner in which this water is conveyed is where the problem arises for fish

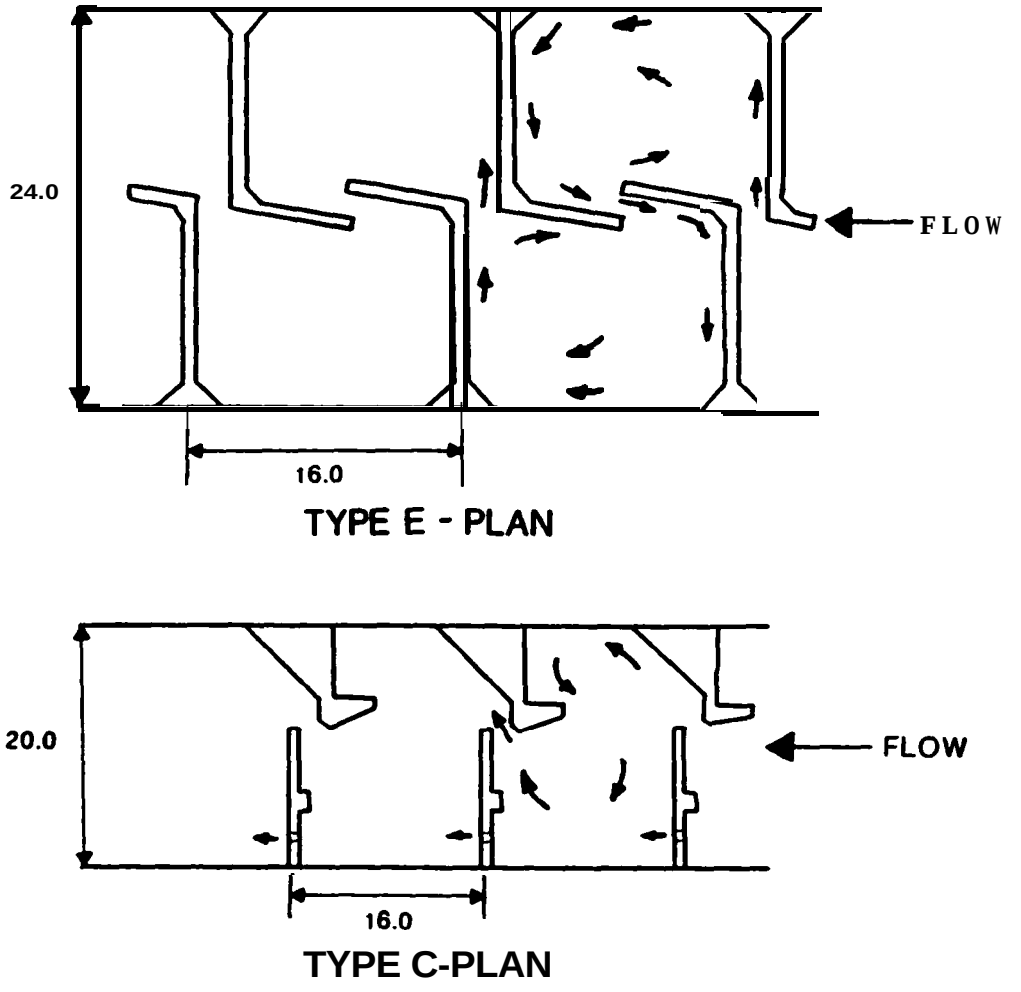

Figure 31. Two vertical slot baffle systems developed at the Bonneville Fisheries-Engineering Laboratory for controlling fishway flow when forebay elevation fluctuates.

passaqe. This section will describe current practices in culvert design as related to fish passaqe. Four significant papers used for source material are "Fish Passaqe Facilities for Culverts of the Mackenzie High way," Enqel (1974): "Design of Culvert Fishways," Watts (1974); "Culvert Guidelines: Recommendations for the Design & Installation of Culverts in British Columbia to Avoid Conflict with Anadromous Fish," Dane (1978): and "Fish Migration and Fish Passage,* Evans and Johnston (1980).

Many culverts are made from corrugated metal pipe. Some culverts consist of wooden box structures or other materials to support the embankment. The most desirable type of culvert for fish passage has a bottom consistinq of native material. The open- or bottomless-arch culvert is the most common of this type. Round culverts are the most commonly used cross-sectional shape at stream road crossings. This type of culvert usually reduces the stream area, and possibly the roughness of the stream channel which in turn increases the velocity to pass flood flows. The culvert concentrates the flow and then discharges it into an area of stream much wider than the culvert resulting in scour of the bed and banks. The velocity, the depth at which it flows, the culvert slope, and the height of drop from the culvert outlet to the stream bed are the important design factors to consider.

The U.S. Forest Service (Evans, Johnston, 1980) suggest that water depths in culverts should be at least six inches deep for resident trout and at least 12 inches deep for salmon and steelhead. The designers of culverts are often concerned with the swimming capabilities of fish. Evans and Johnston suggest a relationship between the velocity of the water (Vw), and maximum allowable distance between resting pools for certain species (Lp). These are summarized by equations in Table 7, which also includes values suggested by Dane (1978). Dane makes other general suggestions for culvert desiqn. These are:

1. For culverts less than 80 feet in length, the averaqe velocity should not exceed 3.9 fps;

2. For culverts greater than 80 feet, the average velocity should not exceed 3 fps;

3. For culverts qreater than 200 feet, special site specific considerations should be given;

4. Depth of water should not be less than 0.75 feet at any point in the culvert: and

5. Difference in water levels should never exceed 1.0 feet (culvert to outlet pool).

Watts (1974) provides a method for estimating the swimming capability of immature fish. He suggests the use of Fig. 32, which is a plot of relative swimninq speed versus relative length of young and mature fish as developed by Watts and MacPhee (1973). The curve was developed from arctic grayling data.

Table 7. Water Velocity Relationship to Resting Pool Distance for Salmon, Steelhead, and Resident Trout

Note	Species	Velocity and Pool Length Boundaries	
(a)	Most Salmon and Steelhead	$VW < 12$ fps $Lp > 30$ feet	$VW = 12$ fps $Lp < 30$ feet
		$VW = 82\ Lp^{-0.622}$	$VW = 12$ fps
(b)	Pink and Chum Salmon	$Vw < 6.5$ fps $Lp > 32$ feet	$Vw = (6.5\text{-}7.5)$ fps $Lp < 30$ feet
		$Vw = 42\ LP^{-0.562}$	$VW = (6.5\text{-}7.5)$ fps
(a)	Trout	$VW < 5.5$ fps $Lp > 20$ feet	$VW = 5.5$ fps $Lp < 20$ feet
		$VW = 33\ Lp^{-0.618}$	$VW = 5.5$ fps
(b)	Grayling and Northern Pike	$Vw < 2.5$ fps $Lp > 50$ feet	$Vw = (2.5\text{-}2.8)$ fps $Lp < 50$ feet
		$VW = 10\ Lp^{-0.353}$	$Vw = (2.5\text{-}2.8)$ fps

Notes: Fish passage velocity 2 fps net in relation to channel
VW = Velocity of water in feet per second
Lp = Maximum allowable distance between resting pools in feet (i.e., length of culvert)
(a) USDA, Evans and Johnston, 1980
(b) Fisheries and Marine Service, Dane, 1978

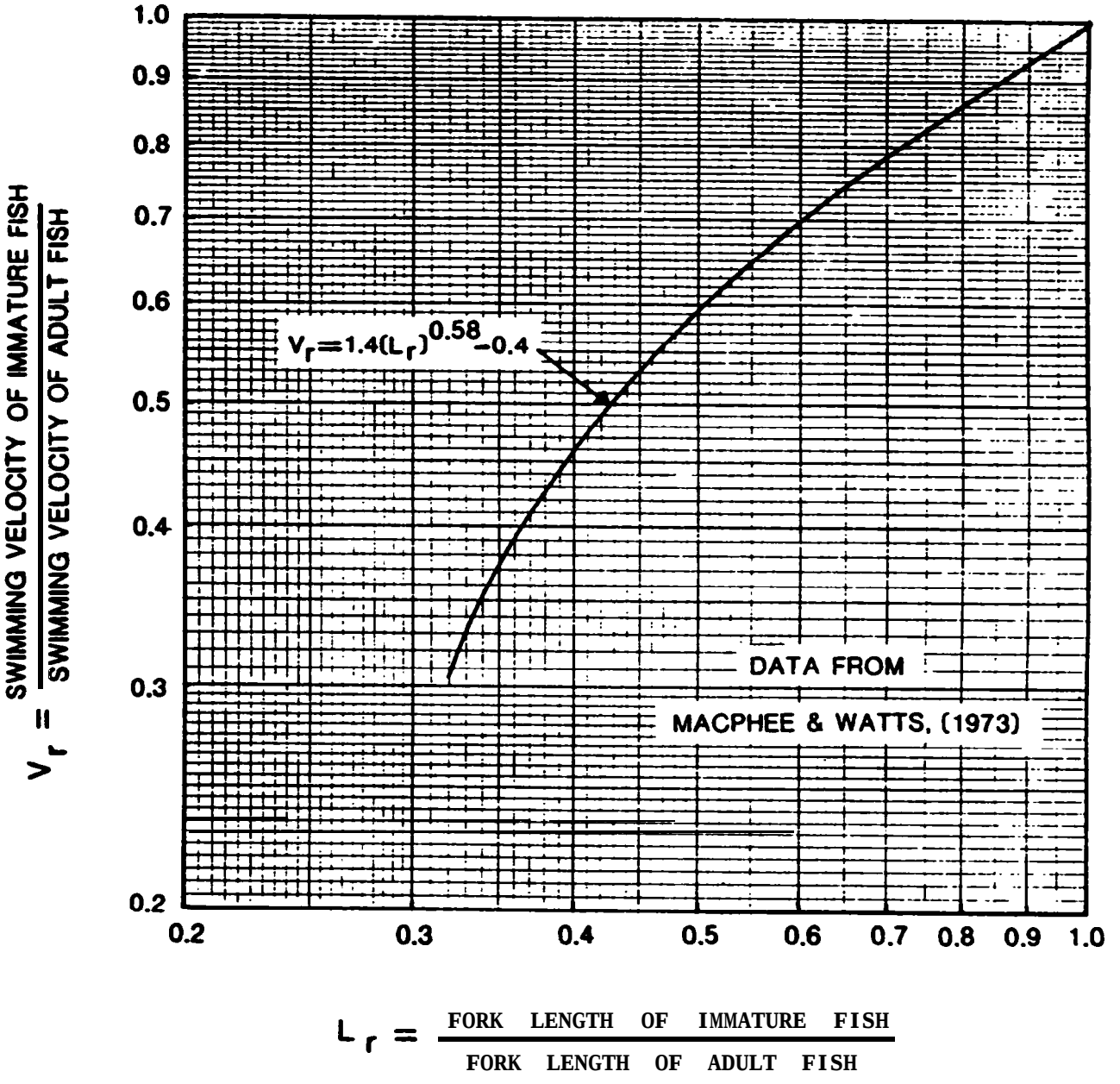

Figure 32. Relationship of relative swimming speed to relative length for artic grayling (modified expression from data by MacPhee and Watts, 1973).

However, Watts suggests the curve should be similar for any specie of fish. Given the fork length of an imnature fish, assuming a fork length for an adult of the same specie and using a range of prolonged swimming speeds of adult fish from Bell (1984), one can enter Fiq. 32 and determine the sustained swimming capability of an immature fish. Watts also suggests that the upper range of prolonged swimming speed should be used for short culverts (60 feet) and the lower range for long culverts (150 feet).

Baffled Culverts

The effective slope of the culvert at any point along its length should not exceed 0.5 percent for a culvert greater than 80 feet in length. For culverts less than 80 feet in length, the slope should not exceed 1 percent. If these conditions are not met, the addition of baffles is recommended. The slope of the culvert even with baffles should not exceed 5.0 percent. If the culvert slope does exceed 5.0 percent, then a culvert fishway must be considered.

The most successful baffle configuration is the offset baffle design developed by McKinley and Webb (1956), WSDOF (see Fig. 33). In this arrangement, the jet velocity at the opening between the baffle pairs is the governinq factor.

Testing of these baffles by McKinley and Webb (19S6) has indicated qood cleaninq characteristics. but some installations in Oregon and Washington have filled with bed material and are no lonqer completely effective. Another undesirable feature of any floor baffle is the loss of high flow efficiency. Culvert efficiency is the depth of flow without baffles divided by the depth of flow with baffles. Model tests done by Watts-with 1 foot high baffles indicated an efficiency of 69 percent. This would cause the headwater to increase higher than the specified design for a regular culvert without baffles, in order to drive the same discharge through the culvert. This may inundate valuable land or structures by backing up water but can be corrected by increasinq the size of the culvert:

In box culverts, baffles are constructed across only a portion of the total culvert width with a low divider wall separating the two channels. This presents a problem to fish passage as the fish are faced with a choice of two routes. In this situation, the channel without baffles should be blocked with a low weir of some type, so the fish do not use it (for B > 4 ft).

As in fish ladders, the entrance (or outlet pool) is extremely important in attractinq fish into the culvert. Dane suggests that the length and width of the outlet pool should be twice the diameter of the culvert, and the bottom elevation of the pool should be at least two feet below the invert elevation of the culvert, for a one-foot drop at the outlet. Watts suggests a pool

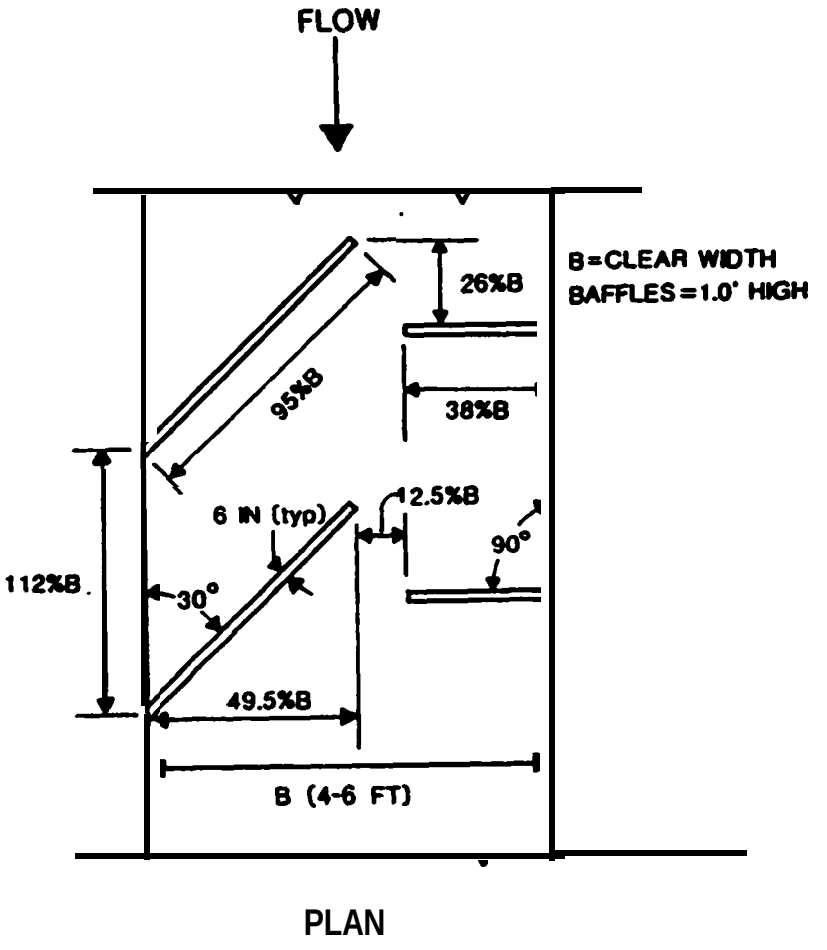

Figure 33. Culvert Baffle arrangement suggested by McKinley and Webb (1956).

1ength of S-7 pipe-diameters. This may require a natural or artificial control sill, or series of sills (i.e., gabions, logs, and/or rock berms), to provide control of the pool level and downstream gradient.

3. FISH LOCKS AND FISH ELEVATORS

Fish locks and elevators represent alternatives to conventional fishways for passinq fish over dams. Fish locks raise fish over dams by filling a chamber with water, which the fish have already entered, until the water surface reaches the forebay level and permits the fish to exit. Elevators are a mechanical means of transportinq fish over a dam, such as buckets hung on a cable, or even trappinq and trucking around. Clay (1961) describes many different types of locks and elevators used around the world, covering costs, operation principles and practical use. This report will not repeat this work but qives an example of a new FISHLIFT not covered by Clay.

The Warner FISHLIFT, developed in 1977 is the latest in fishlock design. The first installation was at Cariboo Dam in 1981, on the Brunette River in British Columbia. Its rated capacity was in excess of 2000 fish per day. It consists of a semi-buoyant chamber floating in a vertical or inclined cylinder. Attraction water entices the fish into the unit which then transports them to the desired level where they are released. The main advantaqe in this set-up was that modification to the existing dam was avoided and interference with the dam's operation was kept to a minimum during installation. The fish movement process is intermittent, and electrical or mechanical failures of any lift or lock system can be detrimental to the condition of upstream miqrating fish.

HYDRAULIC CONDITIONS IN FISHWAYS

In considering hydraulic design in fishways, one needs to be concerned with three aspects: 1) flow over a weir, 2) flow down a chute with roughness elements of various sizes and shapes, and 3) flow through a submerged orifice or slot.

Pool and Weir Flow

As water flows over a weir and enters a pool, it either flows along the surface, generating strong unbroken standing waves, or it strikes downward, becomes fully submerged and sweeps the bed of the pool. These are described as streaming or plunging flows, respectively (see Fig. 34). Experiments done at the Corps Fisheries-Engineering Laboratory by Thompson (1970) examined the behavior of adult chinook salmon in plunging and streaming flows to determine if one flow was preferable over the other. The results indicated that fall-run chinook salmon can ascend a pool and overfall ladder equally well under either plunging or streaming flow. The fish were delayed only when the flow changed from plunging to streaming or streaming to plunging. From this study, plunging flow was defined as existing when the head on the weir was greater than or equal to 0.8 feet and less than 1.0 foot. Streaming flow was defined as when the head on the weir was greater than or equal to 1.0 foot.

Chute Flow

When water enters and flows down a chute or Denil-type ladder, it goes through three flow regimes: a flow development region; a fully developed flow region; and a drawdown section at the water outlet. If the chute outlet (water inlet) is located in a relatively calm area, the flow will enter the ladder and immediately obtain a full-channel width. This is a desirable condition for proper energy dissipation and passable velocities. If the inlet is not located in a calm water area, the transition could create excessive drawdown and increased velocities due to the contraction of the entering water. Clausen and Floodeen (1954), tested the Denil, deep-channel fishway and found that rounding the entrance decreased the jet contraction and drawdown, and a full channel flow width was obtained. The fully developed flow region consists of two interacting parts: the main stream in the central portion of the channel, and a series of lateral streams created by the vanes. This interaction between the main stream and the lateral ones produces air entrainment, turbulence and energy loss. At the water outlet, the tailwater fluctuation must be the governing design factor. A low tailwater could produce excessive drawdown and therefore high velocities; but on the other hand, with a high tailwater and little or no drawdown, the lower exit velocities could reduce the effectiveness of the fishway attraction.

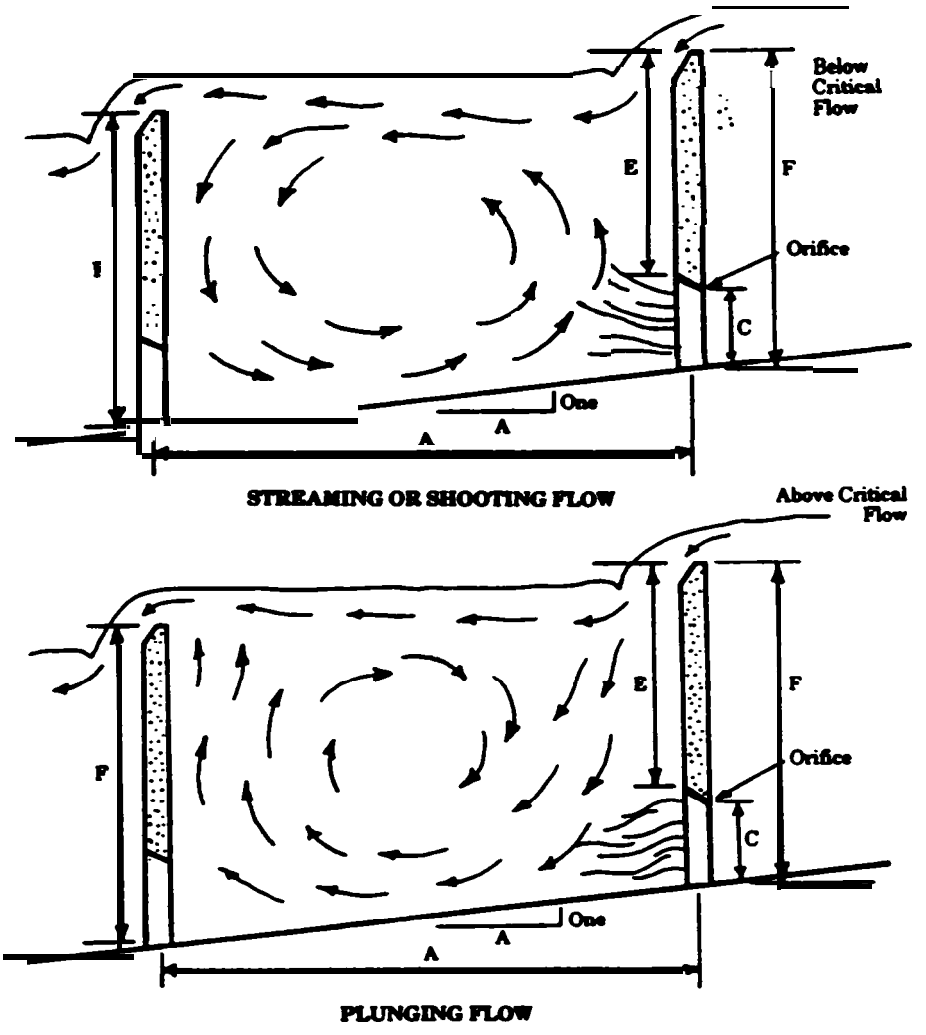

A	Pool Length	6-20 Ft.
B	Pool Width	6-20 Ft.
C	Orifice Height	18"
D	Orifice Width	15"-18"
E	Position of Orfice Vertically	4.25 Ft.
F	Weir Height	6 Ft.
	Drop Per Pool 12" Maximum	

Fig. 34. Hydraulic conditions for shooting and plunging flow after Bell (1984), page 246.

Orifice and Slot Flow

In pool-type ladders, the manner of dissipating energy is quite different from chute or Denil ladders. In pool ladders, the energy must be dissipated at each pool so that no erratic flow pattern is present at the opening to the next pool.

Jet dispersion in a space of unlimited extent is a fluid motion problem of which has received a considerable amount of theoretical and experimental attention (Daily and.Harleman, 1966). The dispersion of jets in closed chambers, which is the situation encountered in fish ladder pools, has received little attention. Studies done by White and Nemenyi (1936), with an air jet discharging into a closed chamber of varying wall roughness, indicated that the dissipation begins along the surface of the unbroken jet, and roughening the walls or extending the width has little effect; therefore, a considerable length of pool is necessary. They found also that the maximum velocity was reduced to less than one-quarter in a distance of 12 orifice diameters. This is equivalent to a dissipation of more than 90 percent of the jet energy, which they determine would ensure a smooth flow transition through the ladder. This was the main criterion used in the design of ladders by the British ICE Committee on Fish Passes (1942).

Velocity Calculations

In chute-type ladders, the energy must be dissipated in such a manner as to secure an even flow at an acceptable velocity for passage. Velocity down a Denil-type ladder can be calculated from the equation:

$$V = C\sqrt{RS}$$

where C is the Chezy coefficient, R the hydraulic radius and S the slope. White and Nemenyi (1936), suggest that the area and perimeter do not have direct bearing upon the effective size of the channel in providing a way for fish. Rather the minimum width or the minimum depth, whichever is less, controls the size of the fish which can pass along the channel. Therefore, they define R as the diameter of the inscribed circle (minimum dimension) = f (least fishway dimension), rather than R = flow area/wetted perimeter.

Velocity calculations for overflow weirs or submerged orifices in pool ladders, can be made using the standard weir and orifice discharge equations.

In some cases, the magnitude of flow through a fishway can alter the operation of the baffles. For example, in a Denil-type ladder like that shown earlier in Fig. 29, a low flow through the ladder would act as flow through a series of V-notch weirs and pools. Also in slotted ladders, where the sill height in the slot has been raised to dissipate the energy and control the flow, the low flow situation is like a notched overflow weir. The sill tends to pull the jet from the slot down into the cushioning pool where better

mixing and energy dissipation take place. Instead of using the length of the pool to dissipate jet energy, the sill acts as an overflow weir allowing reduced pool lengths during operation at lower flows.

Katopodis and Rajaratnam (1983) recently completed an extensive study of Denil Fishwavs (includinq the Alaska Steeooass) and also included a brief historical review of fishway development. the reader is referred to this report for further details, but briefly the author's found that:

1. The highest velocities in a steeppass are near the bottom,

2. In the Denil (with V-weirs and side vanes) the maximum velocity occurs near the surface, and

3. The average velocity of the Steeppass flow was about 14% of the velocity in a smooth flume under similar discharge and slope conditions.

Data from Ziemer (1962) have been plotted for the Type A Alaska Steeppass Unit (Figs. 35a and 35b). Velocity has been solved for in terms of slope (S) and discharge (Q) so that

$$V = 3.5(S)^{0.30}(Q)^{0.25}$$

Discharge in Fig. 35a is solved for in terms of Slope (S) and the mean depth of water (d) to give

$$Q = 7.0\,(S)^{0.5}\,(d)^{1.33}$$

These two equations in Fig. 35b can be re-arranged to solve for any of the desired parameters.

Based on the tests by Katopodis and Rajaratnam (1983) the general discharge equation for the ICE Denil (Fig. 29) is

$$Q = 5.67\,b^2\,d^{0.5}\,S^{0.5}$$

Where: b is the clear spacing between the side baffles, d is the depth of flow measured perpendicular to the fishway floor, and S is the slope of the fishway.

Type A. Alaska **Steeppass Rating** Curve

Type A. **Alaska Steeppass**

a. **Velocity as a function of Slope and Discharge**

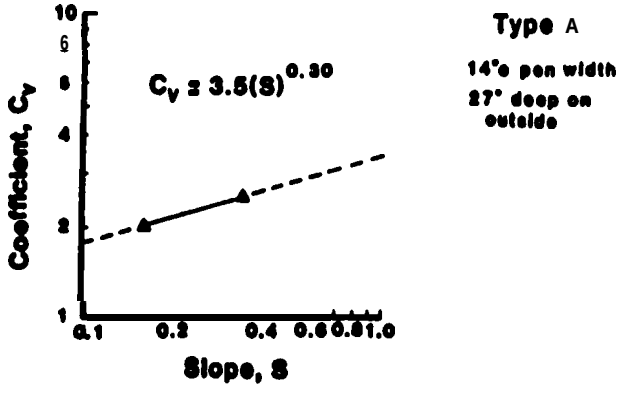

$$V = 3.5(S)^{0.30}(Q)^{0.25}$$

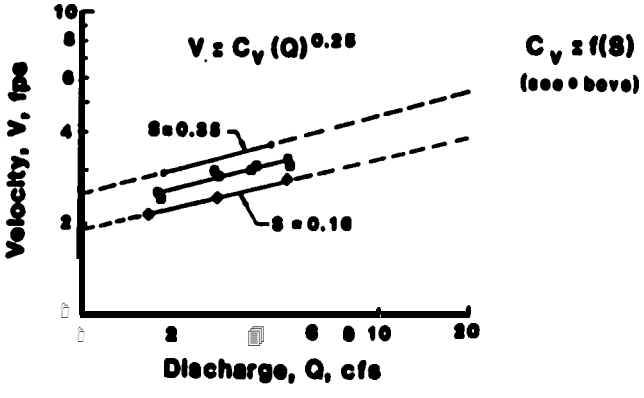

b. **Discharge, a function of Depth**

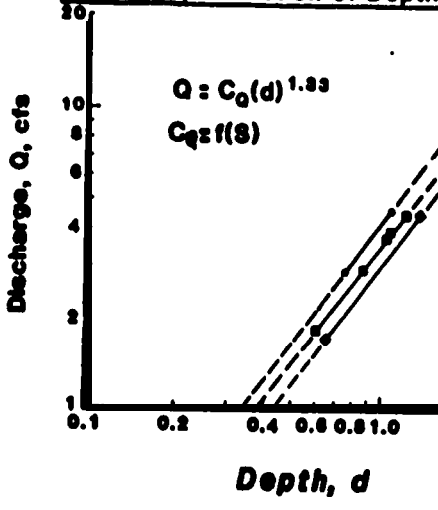

$$Q = 7.0(S)^{0.5}(d)^{1.33}$$

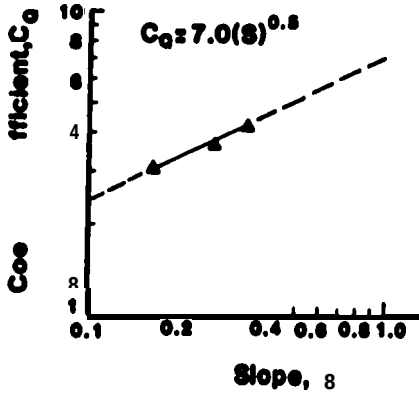

Figure 35. Rating curves for Alaska Steeppass Type A fishway.

CAPABILITIES OF FISH AND CONTROLLING CONDITIONS

Introduction

The species considered in this part of the report are listed in Table 8. Velocity data are unavailable for some species and conditions and, therefore some capabilities had to be estimated. In developing a basis from which we can consider the various physical relationships between fish species and their velocity needs or limitations in fishways, we must first assume a basic set of natural conditions. Natural and artificial factors which affect fish swimming capabilities include: sediment, water temperature, streamflow dissolved oxygen, and other water chemistry factors. Road building requires the installation of stream crossing structures, either culverts or bridges. These structures have the potential to become artificial velocity or elevation barriers to migrating anadromous, rearing and resident fish. As such some form of fishwav may need to be installed to assure passage. These hard, straight fixed surfaces can be classified as "altered passage boundaries" which change the hydraulic characteristics of the stream.

Table 8. Popular and Scientific Names of Some Common Anadromous and Resident Commercial and Sport Fish Species.

Name	Symbol	Popular Name	Scientific Name
Chinook Salmon	CK	King, Tyee	*Oncorhynchus tshawytscha* (Walbaum)
Chum Salmon	CM	Dog	*O. keta* (W.)
Coho Salmon	co	Silver	*O. kisutch* (W.)
Pink Salmon	PK	Humpback	*O. gorbuscha* (W.)
Sockeye Salmon	so	Red	*O. nerka* (W.)
Atlantic Salmon	AT	Leaper*	*Salmo salar* (Linnaeus)
Steelhead Trout	ST	Steelhead	*Salmo gairdneri* (R.)
Rainbow Trout	RB	Rainbow	*Salmo gairdneri* (R.)
Cutthroat Trout	CT	Cutthroat	*Salmo clarki* (Richardson)
Dolly Varden	DV	Dolly, Char	*Salvelinus malma* (W.)
Brook Trout	BK	Speckled	*Salvelinus fontinalis* (Mitchill)
Brown Trout	BN	German	*Salmo trutta* (L.)
Grayling	GR	Grayling	*Thymallus arcticus* (Pallus)

*Sea Salmon

These factors can adversely affect the primary characteristic of fish--their swimming capabilities. In order to differentiate between water velocity, fish velocity and the relative velocity of the fish to the water, the term speed is used to designate the rate of motion of fish with respect to a reference plane. Relative speed will denote the difference between fish speed and the velocity of the water.

There are water velocities to which fish cannot respond through movement, but upon which they are totally dependent, such as the velocity of flow through spawning gravels during the egg incubation phase. A general set of relationships between fish and velocity is presented in Fig. 36. Although some of the activities noted in the diagram are concerned with stream flow, it is really the velocity, or lack of it, which breeds success or causes problems for the mature fish, smolt, fry, alevins, or eggs. With the attractive velocity filament comes the migratory movement to the spawning grounds, or the high velocity blockage of that movement. Observations of preferred spawning velocities and depths (depth seems to be secondary to velocity) sought by spawning fish abound in the literature. The flow through spawning gravels carries with it the oxygen (or the lack of it, if from groundwater) which directly affects the eggs and alevins. Flow aeration due to velocity, which occurs upstream of the gravels, provides oxygen (Vaux, 1962; Wickett, 1954).

The physical barriers to upstream migration passage consist of either velocity chutes or differential elevations, or combinations of the two conditions. Under natural conditions fish may be able to negotiate these barriers during higher or lower discharges. In some instances, depth may be the controlling factor. For example, at a pipe-arch culvert where the fish can successfully move from a down-stream pool into the culvert migration upstream may be limited by the shallow depth of water in the wide-bottomed culvert.

As might be expected, upstream passage has received an inordinate amount of attention in the literature. This is largely due to two factors:

1. Our desire to enhance the fisheries upstream of natural barriers; and

2. Our desire to minimize the impacts of dams and offset other detrimental practices by providing fish passage facilities.

Studies done in connection with man's impacts have provided us with much of the data on fish and velocity relationships.

Swirmming Speeds

Throughout the life cycle of a fish, its total set of functions are velocity dependent, even while resting. As was shown in Fig. 36, from the

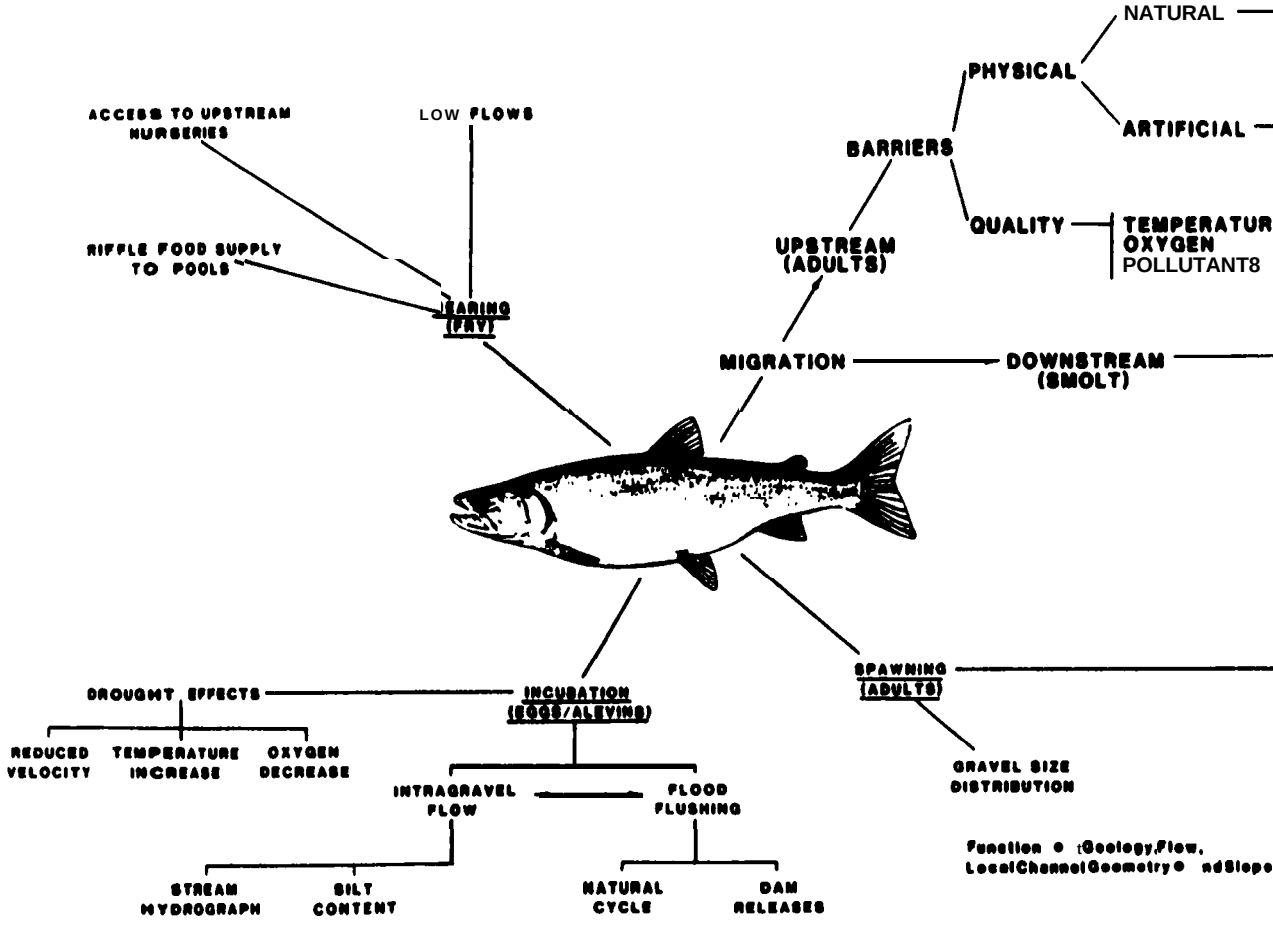

Figure 36. Interrelationships of fish and velocity during four life stages with upstream migration.

time a young fry begins to feed, it seeks certain velocity conditions, and as the fish increases in size, so do its strength and speed, and thus its water velocity tolerance and preference.

Ranges of fish speeds are classified in the literature according to the function, or relative speeds, which they can maintain while cruising, sustaining and darting (or bursting). Some values of these speeds are given in Table 9.

Recently more well-defined terms of classifying levels of fish swimming speeds have been published (Hoar Randall, 1978). Sustained swimming implies that it includes any activity which does not cause fatigue including foraging, schooling, holding, and migration under aerobic metabolism. Burst swimming at high speeds can be maintaine less than 15-20 seconds using primarily anaerobic processes for energy. Prolonged swimming covers the range of conditions between sustained and burst speeds. Prolonged swimming is divided between steady and more vigorous modes, but results in fatigue if continued.

These classifications of speeds as published by Hoar and Randall (1978) will be used throughout the rest of the report:

Sustained--normal functions without fatigue;
Prolonged--activities lasting 15 seconds to 200 minutes which results in fatigue; and
Burst--activities which cause fatigue within 15 seconds or less.

Fig. 37 displays a graphical example of these speed ranges. Many velocity studies have been conducted on various species in order to relate swimming speed to fish size and environmental conditions (Beamish, 1978; Brett and Glass, 1973; Davis, et al., 1963; Paulik and Delacy, 1957). These tests usually deal with PROLONGED speeds and the results are combined with BURST speed tests conducted on adult fish. PROLONGED speed is especially important in the consideration of upstream fish passage through long rapids, chutes, and through culverts. The PROLONGED speeds, in some cases, may indeed have to be BURST speeds to achieve passage. The rate of energy expenditure increases very rapidly with increasing speed, and the time until exhaustion commences (time available for passage) decreases accordingly as shown in Fig. 37.

A fourth speed (standard speed) which is useful for comparing species, and fish of varying ability within species, is the CRITICAL speed which is defined by Hoar and Randall (1978) as the maximum speed achieved in stepwise increasing step-velocity tests prior to fatigue--or

$$S_{crit} = S_{f-1} + \left[(S_f - S_{f-1}) \times t_f/t_i\right]$$

Table 9. Nominal upper limits of sustained, prolonged, and burst speeds of adult fish.

Species	Upper Speed for			
	(1) Cruising (2)(Sustained) (fps)	Sustained (Prolonged) (fps)	Darting (Burst) (fps)	Observed Maximum (fps)
Salmon				
Chinook	3.4	10.8	22.4	22.1
Chum[1]	1.6	5.2	10.6	--
Coho	3.4	10.6	21.5	17.5
Pink[1]	1.8	5.6	11.3	--
Sockeye	3.2	10.2	20.6	--
Trout				
Cutthroat	2.0	6.4	13.5	13.5
Steelhead	4.6	13.7	26.5	26.8
Brown	2.2	6.2	12.7	12.8
Atlantic Salmon[2]	4.0	12.0	23.2	26.5

Data primarily from Bell (1973), Beamish (1978), and Dimeo (1977).
Row (1) - Classification of speed in Bell (1973, 1984).
Row (2) - Classification of speed in Beamish (1978).

[1]Burst speed estimated from observed leap heights. Sustained and prolonged speeds estimated as ratios of burst speed similar to sockeye salmon.

[2]Burst speed of Atlantic salmon estimated from leap height of 11 feet 4 inches (Calderwood, 1930). Sustained and prolonged speeds estimated as ratios of burst speed similar to steelhead.

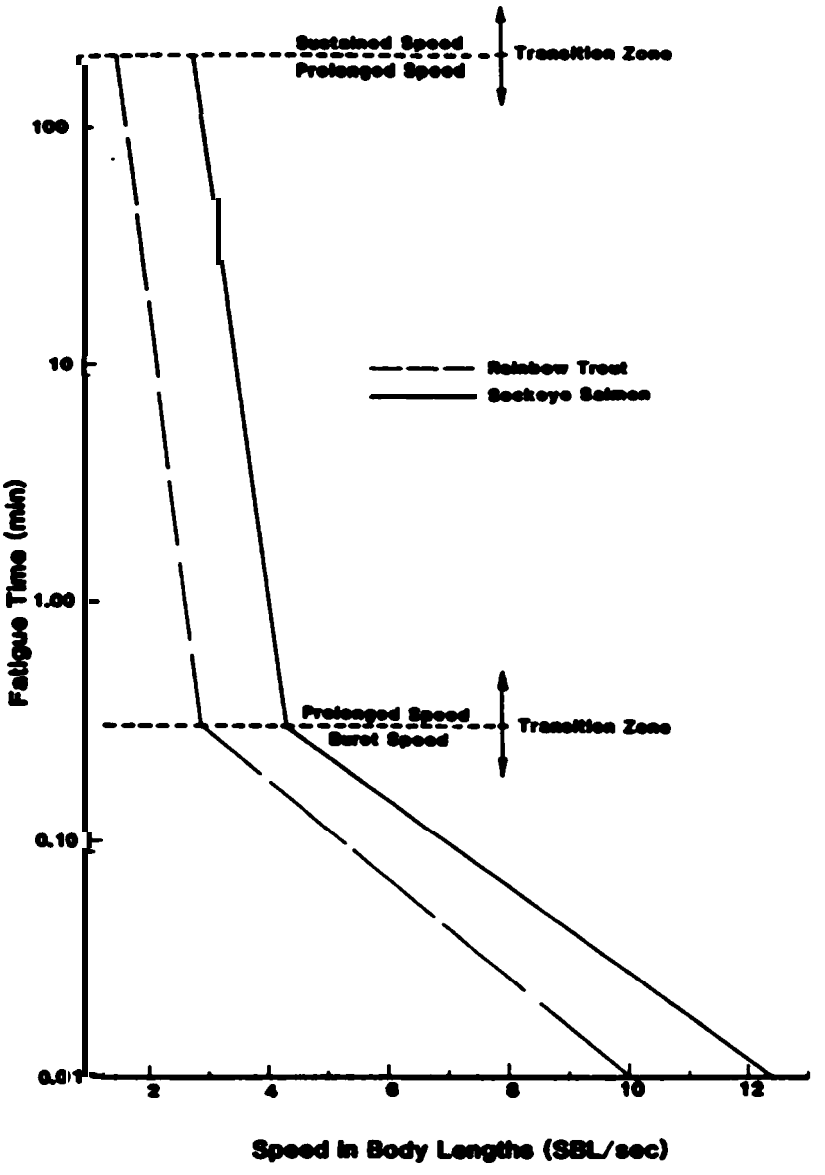

Figure 37. Speed, fatigue time and fish size for young rainbow and sockeye (after Beamish in Hoar and Randall, 1978).

where: S_{crit} = the critical speed;

S_f = the speed at fatigue;

S_{f-1} = the speed at the next lower increment before the fatigue speed;

t_f = time to fatique during the test increment; and

t_i = the length of time in the step increment, usually 60 minutes.

For example, if a fish was able to swim 4 fps for 60 minutes, but only for 10 minutes at 5 fps, its critical speed would be

$$Scrit = 4 + [(5-4)\ 10/60] = 4.2 \text{ fps}$$

These critical velocity measures are for steady swimming, whereas fish rarely swim steadily when performing their usual functions. But when they are faced with the uniform velocity field over an extended length, Scrit can be used as a design guide. Rarely, though, is a fish faced with a uniform velocity over any appreciable distance.

Leaping Ability and Maximum Speed

Commencing at the upper limit of a fish's capability, with maximum speed, provides a more definite basis for comparing species, considering some design standards for passage facilities, and evaluating the passability of barriers.

The ability of salmon to leap past waterfalls is an obvious and well-known fact. But success is highly variable, as is man's interpretation of this natural phenomenon. As noted by Stuart (1962) it took a long time to dispel1 the "tail-in-mouth" theory described by Michael Drayton in 1612.

> Here, when the labouring fish at the foot (of the fall) arrive, and finds that by strength he does but tainly strive; his tail takes in his mouth and bending like a bow, that's to full compass drawn, aloft himself doth throw.

There are certain conclusions which can be drawn from Stuart's (1962) studies about observations of fish leaping:

(1) Williamson (1822) stated (in Stuart, 1962) that a salmon, in preparation for leaping a falls, "descends deep into the pool."

(2) Stuart stated that "the leaping fish invariably commenced its jump from near the surface of the pool and never from the depths . . ."

(3) Both statements are obviously correct because:

- the fish respond to the hydraulic conditions by sensing the edge of the dominant jet (flow filament);
- the dispersion of the flow over the falls (or weir) is governed by the boundaries (shape) and size of the pool;
- the natural pool observed by Williamson was formed by flood flows to a depth (probably) greater than the depth to which the observed passage flow was descending; but the fish had to seek the edge of the jet at depth downstream of the standing wave;
- Stuart's weir flows were discharging into a "relatively shallow" pool (rectangular) and he probably could not achieve them deep" pool configuration observed by Williamson;
- increasing the depth in Stuart's test pool probably did not create a "deep pool" situation because the elevation of the weir was fixed, and the fall height (and thus the jet velocity) was reduced as the pool depth was increased.

It was assumed that many persons have documented the leaping abilities of various species of salmon and trout. But, after reviewing the literature and conducting *a* survey of 50 fisheries engineers and biologists (8 responses), it appeared that recorded hard data, or even observations, on the leaping ability of these fish (and the conditions under which the leaps have been attempted) are in short supply. In considering alternative designs of fish passage facilities for upstream migrating fish, it seemed appropriate to analyze the most naturally efficient way that the fish achieve passage--by leaping--and then design to optimize those conditions. This was the approach we took in Part 2 of this project in developing the new *waterfall weir" and pool configuration--try to design for the best leaping conditions.

Factors Affecting Fish Speeds

There are physiological limitations which are related to burst, maximum or darting speed (referred to as "burst" speed from hereon). Wardle (1975) developed relationships between the contraction time of swimming muscles and fish size. Based on this relationship he was able to develop an upper limit on swimming speed using the twitch time of the lateral white muscle of marine teleosts and other small species. Small fish (4 in. +) had been observed to be able to swim *at* up to 25 body lengths per second, whereas larger fish (36 in. +) could achieve only about 4 body lengths per second (BLS). (Note: Tests not used by Wardle in his 1975 article show mature salmon and steelhead can achieve burst speeds of 27-28 fps which would be about 9 BLS rather than 4 BLS. Maximum prolonged speeds are on the order of 4BLS.) The smaller fish have higher tail beat frequencies (TBF) and TBF ranges from 0.6 - 0.8 times the fish length.

The concept that fish burst speed is limited by the relationship between muscle twitch time and stride leads to some interesting possibilities for future investigation. We just explored the leaping success of fish at

waterfalls and found that if attraction (standing wave) conditions are satisfied, limiting conditions can occur at the crest of the falls. Here fish may have to try and sustain a burst speed for a prolonged time period which exceeds their endurance. As was observed by Stuart (1962), fish which are not able to sustain the speed for along enough period to gain a resting spot are swept back downstream. Just before they succumb, the amplitude of their body motion is elongated.

Perhaps under this condition in their passage, as in the case of any high velocity chute, one can equate the inter-relationships of drag and maximum prolonged speed in a burst mode, and develop another design parameter for improving fish passage. Fish may not be able to develop full burst speed in such a high velocity environment without having a lower velocity field from which to initiate the necessary motions.

Besides the burst speed which anadromous fish must exert on occasion to feed, avoid predators or other dangers, and to pass barriers, they spend most of their lives in one of the other two levels of movement--sustained or prolonged speed. We are evaluating the physical capabilities primarily of salmon and trout, and the "releases" which stimulate the drives resulting in an acceleration or deceleration in fish speed. These inherent characteristics include other related factors such as he homing instinct of anadromous species. Before discussing locomotion and dynamics of various fish speeds, it may be helpful to divert for a few moments and explore some fundamental aspects of the homing and energetic characteristics of the subject.

Homing

Two articles which go far towards describing the inherent velocity-related senses and abilities of salmon appeared ten years apart in Scientific American. In 1955 Hasler and Larsen wrote about the results of various studies, including their own, which dealt with the homing instinct of salmon. After reviewing available information the authors developed some unique laboratory apparatus to test fish responses to various stimuli. Because of the odors in the underwater environment, Hasler and Larsen were able to train minnows to respond to very low concentrations of phenol (a release) in order to avoid a mild electrical shock. Later with both minnows and salmon, they ran tests using two creeks in Wisconsin to learn whether the fish could discriminate between the waters which varied mainly in organic matter. Destruction of the fishes' nose tissue rendered them unable to distinguish between the two waters.

Field tests were run in two branches of the Issaquah River in Washington. Ripe salmon were trapped and taken from the tributaries, the noses of half the fish were plugged and they were replaced in the Issaquah downstream of the tributaries. Those fish with plugged nasal passages (odor-blind) randomly chose either the correct or the wrong tributary, whereas most of the normal fish re-entered their home tributary.

Energetics

Besides their ability to "home," anadromous fish have a remarkable reservoir of energy, and efficient recuperative powers, to transcend the distance and elevation difference from the ocean to their "hatchery"--whether it be the natural gravels of their stream of origin, or the attraction flow of an artificial hatchery. In 1965, Brett published the article in which he discussed the swimming "energetics" of salmon--he expanded on the "apparent" fact (called "Gray's paradox") that says fish swim more efficiently than we are able to account for using hydrodynamic theory. In seeking their home spawning area, the anadromous fish minimize their expenditure of energy by usinq what Brett (1965) called "their magnificent sense for hydrodynamic advantage.' This ability to sense the edge of the best filament of velocity to achieve upstream passage has been discussed in terms of the leaping ability of salmon, steelhead and trout.

To address some of the obvious questions about man's lack of understanding of natural salmon phenomena, researchers have conducted literally hundreds of studies. Brett (1964) presented some of his very thorough work on young sockeye. This basic work provides a foundation for setting limits on the sustained performance of this age group and species.[1] A sumnary of the findings includes:

(1) Optimum activity levels occur at about 15' C, swimming at about 4 body lengths per second for 1 hour (sustained speed);
(2) Active metabolism was apparently limited by oxygen availability above 15°C;
(3) The subjects recovered from fatigue (caused by prolonged speed) after an average time of 3.2 hours (independent of temperature);
(4) They achieved a sustained level of performance at about 200-300 minutes;
(5) Respiratory metabolism (RM) and swimming speed (SS) are related by

$$RM = a\,(e)^{b(SS)}$$

where RM = rate of respiratory metabolism (oxygen consumption) (mg O_2/kg/hr), e = the Naperian logarithmic base, and SS = swirmming speed in body lengths per second.

Over the range of acclimation temperatures (5-24° C), the coefficient a ranged from 1.61 to 2.29 and exponent coefficient b from 0.34 to 0.17.

---

1 Standard test conditions were for 7-inch (18 cm), O.lO-lb (50 gram) yearling sockeye in air-saturated fresh water at 15° C.

Rewriting the previous equation to cover all test conditions yields

$$RM \begin{bmatrix} 24^\circ C \\ \\ 5^\circ \end{bmatrix} = \left[a \begin{bmatrix} 2.29 \\ \\ 1.61 \end{bmatrix} \right] e^{\left[b \begin{bmatrix} 0.17 \\ \\ 0.34 \end{bmatrix} \right] SS}$$

Similarly, and more practically in terms of design considerations, one can use fatigue time instead of respiratory metabolism and achieve similar, but more easily applied functions.

Following an order of descending magnitude for fish speed, from burst speed we have entered the ranges of prolonged and then sustained speeds. Whereas burst speeds can be maintained only for a matter of five to fifteen or twenty seconds (nominally), sustained speeds are those which can be maintained for over 200 minutes without fatigue (Beamish, in Hoar and Randall, 1978).

The category of speed in the intermediate time range is called prolonged speed which results in fatigue after about 20 seconds to 200 minutes. The basic difference between sustained and prolonged speeds is the question of fatigue. Burst speed can be considered a prolonged speed, if when attempting to negotiate a high velocity passage the fish become fatigued and have to fall back (as has been viewed at waterfalls, chutes and fishways). But the time range of 1-20 seconds for burst speed, differentiates it from the time range of prolonged speed (20 seconds to 200 minutes), and sustained (or cruising) speed (greater than 200 minutes, or essentially indefinitely).

Summarizing samples of the available data, one finds that for migrating fish the mean sustained cruising speed is in the range of 0.5 to 0.2 body lengths per second (BLS). But this type of migration at "mean sustained speed" includes a considerable amount of lateral movement, whereas the distance is calculated along the river length and is only a "net upstream speed."

Referring to Beamish's state-of-the-art chapter on swimming capacity in Hoar and Randall (1978), he combined data on the various levels of swimming speeds for trout by Bainbridge (1960, 1962) and for sockeye salmon by Brett (1964). The mean solutions for this data have been developed by fixing the transitional values to provide equations in a form which will be useful for conservative design. Referring again to Fig. 37, the two graphs denote the ranges of speeds in body lengths (SBL) which trout and sockeye salmon can prolong in terms of fatigue time (FT). Because of the semi-logarithmic nature of the function the two graphs can be expressed in ranges of the standard time increments mentioned earlier.

Trout	Sockeye
For prolonged speeds (200 minutes to 20 seconds):	
$FTPS = 25 \times 10^4/(e)^{4.6SBL}$	$FTPS = 80 \times 10^6/(e)^{4.5\ SBL}$
For burst speeds (prolonged speeds for less than 20 seconds):	
$FTBS = 1.2/(e)^{0.20SBL}$	$FTBS = 2.0/(e)^{0.43SBL}$

Some characteristics of these graphs which are of value for upstream fish passage design include:

1. For smaller fish (trout) in the prolonged speed range, a doubling of speed in body lengths (SBL) from 1.5 (+) to 3.0 (+) changes the fatigue time from 200 minutes to about 0.30 minute (about 20 seconds), a factor of almost 700. So for a 6-inch trout (0.5 ft.), if the velocity is doubled from 0.75 to 1.5 fps, its fatigue time rapidly decreases from 200 minutes to about 18 seconds.

2. Sockeye, being stronger, can withstand a velocity change of from about 3 to 4.3 SBLs over the prolonged speed time range of 200 to 0.3 minutes. Assuming application to larger fish, this means that a 2-ft. sockeye when swimming at 6 fps (8 times the 200-minute speed of the 6-inch trout), can swim 8.6 fps (about 5.7 tilnes the trout speed of 1.5 fps) for 20 seconds.

This emphasizes the need to consider the passage velocity of the smaller fish in cases when rearing fish must pass upstream through a culvert to gain access to nursery areas during high flows.

LOCOMOTION AN0 HYOROOYNAMICS

Introduction

Anadromous fish have adapted to the environmental conditions of their life processes, as have all other species to theirs. As a result, the salmonids considered in this report have developed certain vertebral structure, muscular systems, swimming modes and thus hydrodynamic capabilities. The numerous articles in the literature on these topics, and hundreds of subtopics, form parts of the scientific body of knowledge on he swimming capabilities of fish. To address the subject of fish swimming in natural and artificial environments comprehensively, one must blend subject matter from the disciplines of chemistry, biology, physiology, fluid mechanics, body mechanics and physics.

This blending has been capably achieved in two major references by Webb (1975) and Hoar and Randall (1978). Within the volume edited by Hoar and Randall (1978) on fish physiology there are the two applicable chapters for this report on:

(1) "Form, Function and Locomotory Habits in Fish," by C. C. Lindsey (1978); and

(2) "Swimming Capacity," by F. W. H. Beamish (1978).

The third chapter in this volume by Webb (1978) ("Hydrodynamics: Nonscombroid Fish") is a more specific version of Webb's earlier fundamental treatise on the "Hydrodynamics and Energetics of Fish Propulsion" (1975).

Because the thrust of this report is to provide an overview of the relationships between fish and velocity to persons who design fishways, locomotion and hydrodynamics will be addressed in terms of basic principles. Persons interested in obtaining more detailed information on the subjects are referred to the two major references by Hoar and Randall (1978) and Webb (1975).

A summary of historical highlights in the development of the hydrodynamic analysis of fish locomotion up to 1971 is presented in Table 10. More recent developments are referred to separately in this section. It is quite obvious from a quick review of Table 10 that the matching of fish propulsion theory to actual energy expenditure still has a discontinuity. Also, data on propulsion modes at high levels of activity (burst speeds) are lacking. The mechanical energy expended during acceleration has been modeled, and it sugqests that the highest final swimming speeds can be reached in the shortest time, and with the lowest energy expenditure, by using the highest acceleration rates (Webb, 1975).

Table 10. Some historical highlights of the study of fish locomotion from 600 B.C.-1971 (after Webb, 1975)

Time	Events
600s B.C.	First reference to propulsive function of the tail.
1680	G. A. Borelli compared movements of the caudal fin to an oar.
1873	3. B. Pettigrew observed shape of the propulsive wave.
1895	E. J. Marey used cinephotography to study locomotory kinematics of swinning fish.
1909-1936	Denil's work on matching fish energy to water energy in chute fishway.
1926	C.M.Breder summarized and classified types of propulsive movements in fish.
1936	Sir James Gray used hydrodynamic theory of drag for rigid bodies to calculate drag of a swimming dolphin; compared with values for mammalian muscle power output. Insufficient power available to overcome the theoretical hydrodynamic drag--Gray's Paradox.
1952	Sir Geoffrey Taylor used hydrofoil theory to formulate a quantitative hydrodynamic model for fish propulsion.
1961	R. Bainbridge used hydrodynamic theory for drag of rigid bodies as a model for swimming drag. Drag was compared with the latest values for muscle power output. Gray's Paradox not supported for most fish.
1960-1963	New respirometers permitted accurate measurement of power available to a swimming fish.
1963	J. R. Brett compared power available to a cruising salmon (calculated by indirect calorimetry) with drag measured on a dead fish, and found insufficient power available to meet the drag'.
1960-1971	Sir James Lighthill developed hydromechanical models of fish propulsion, covering full range of caudal fin propulsion types; first model of practical biological use having deductive and inductive values.

In a later section of this report on the choice of hiqher velocities by upstream migratinq salmon and attraction flow, the maximum operating ranqe of fish speeds between the lowest and most efficient speed, and the maximum burst speed, are derived in terms of the attraction momentum in jets.

Swirmninq Modes

The classification of basic swimminq modes by fish are arranqed in three cateqories: anguilliform, carangiform, and obstraciform. In terms of the relative percentage of body movement associated with these forms, they could be described as total-, half-, and zero-body movement, respectively. Examples of fishes usinq each mode would be eel, salmon, and ostracion, respectively. Ostracion have wide, blunt bodies and use only their caudal fin for propulsion.

The salmonid swimminq mode is within the caranqiform mode, and more specifically in a subcarangiform mode. In this mode both the body and the caudal fin form the wave motion with more than half the wave length occurring within the body length (Fiq. 38).

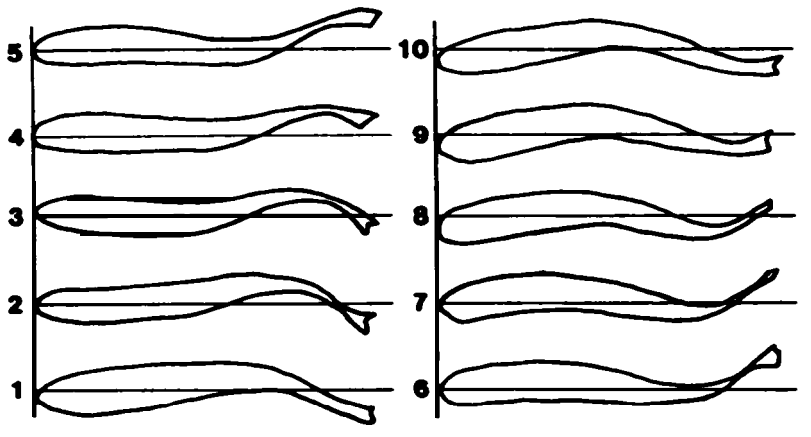

Fiq. 38. Body shape during propulsive cycle for subcaranqiform motion of Salmo qairdneri taken at 0.03 sec. intervals (after Webb, 1975).

The amplitude of the wave increases rapidly towards the posterior half of the body. The connection between the body and the tail (caudal penduncle) is very narrow. The wave length of these relatively stiff bodies (fusiform or spindle shaped).can be related to a specific wavelength in terms of the body length as

$$\text{specific wave length} = \frac{\text{Length of Propulsive Wave}}{\text{Length of Body}} \quad \frac{LPW}{LB} \qquad (1)$$

Sockeye salmon (and other salmon) swim in such a mode (Fig. 38) that LPW/LB > 1 in the subcarangiform mode. In terms of specific wave amplitudes, A, values of A/LB range between 0.04-0.07 at the nose (Fig. 38) and decreases along the body to about the mid-point, or the point of inflection. Beyond this point, the amplitude increases exponentially to a maximum value of about 0.20 at the extremity of the tail.

Basic Equations of Fluid Flow

Flow forces and energy which relate to the stimulation, response, and movement of fish in the hydraulic medium include:

(1) The internal viscous forces in the water;

(2) Shear stress (resistance to flow) on their skins, and shear stress due to contact of the moving water with the stream boundaries;

(3) Relationships between energy, depth (pressure) and velocity;

(4) The drag forces caused by the pressure changes in the wake as the flow passes the fishes oscillating body, plus the friction drag on the fish's skin;

(5) The momentum force in the flow caused by changes in direction and impacts (inertia forces) of the flow and the fish;

(6) The momentum force that the fish are able to generate in saying leaping past a barrier; and

(7) The gravitational attraction force of the earth for the water, as defined by the gradient of the stream, which in turn governs the velocity in conjunction with boundary resistance.

These forces are summarized with their applications in Table 11.

Two main dimensionless ratios of forces enter into the analysis:

Froude Number: $N_F = \frac{\text{Inertia Force}}{\text{Gravitational Force}}$; and

Reynolds Number: $N_R = \frac{\text{Inertia Force}}{\text{Viscous Force}}$.

In equation form these indicators of relative force levels can be written as:

$$N_F = V/\sqrt{gL} \tag{2}$$

and

$$N_R = (VL\rho)/\mu \tag{3}$$

where: V is the velocity at the point in question, or a mean stream velocity of a flow filament;

g is the acceleration due to gravity at $32.2\ fps^2$;

L is a characteristic length of the flow, such as depth, y;--in the case of the Reynolds number L could be the major dimension of an object such as the length of a fish or pipe diameter;

ρ is the mass density of the fluid at $1.94\ slugs/ft^3$ for water at $60°F$ which is constant for natural conditions; and

μ is the absolute viscosity of water which varies as a function of temperature and has a value of $1.2 \times 10^{-5}\ ft^2/sec$ at $60°F$. Between $40°$ and $70°F$, μ varies between 1.66 and $1.06 \times 10^{-5} ft^2/sec$.

All dimensions and units, and the Froude and Reynolds numbers are derived from Newton's second law.

$$F = Ma \tag{4}$$

where: F is the net force acting on a body of
M total mass, caused by
a the acceleration (L/T^2).

Considering the specific (unit) mass of water and the force exerted on that cubic foot of water by the gravitational acceleration, g, then Newton's second law can be re-written as

$$\gamma = \rho g \tag{5}$$

where γ (gamma) is the specific (unit) weight of the water in lb_f/ft^3 (F/L^3) $(62.4\ lb_f/ft^3$ at $60°F)$.

The static pressure forces under water are governed by the depth, y and specific weight, γ, so that $p = \gamma y$ below the free surface of a stream exposed to the atmosphere.

This static pressure value changes as a function of depth and velocity. They are related to each other, and to the potential energy and their total, by the energy (Bernoulli equation) in Table 11.

Considering the depth and velocity of flow above a streambed, then the two energy terms of $(y + V^2/2g)$ are called the specific energy of the flow.

At constant discharge (steady) through a cross-section of a river), then as the flow moves downstream it will change depth and velocity (and specific energy) as a function of changes in channel cross-section and slope. The equation one needs to relate flow velocity to cross-sectional area is the continuity (conservation of mass) equation.

$$Q = AV = A_1V_1 = A_2V_2 = A_iV_i \; . \; . \; . \qquad (6)$$

where: Q is the flow in cubic feet per second (cfs);
A is the cross-section area of top width, W, times mean depth, y; and
V is the mean velocity through cross-section A.

Subscripts 1, 2, and i denote stations or cross-sections along the river. Obviously, as depth increases, area increases, and therefore velocity decreases to keep the discharge constant. In terms of changes in depth and velocity in the downstream direction, the flow is classified as gradually or rapidly varying flow, or non-uniform. If there were no changes in depth or velocity downstream of a reference cross-section (station) the flow would be classified as uniform. For a constant discharge at a station, the flow is classified as steady (or unsteady for $Q \neq C$).

Relationships Between Flow Conditions and Fish Speeds

A general description of stream flow, fish speeds and applicable equations from Table 11 are presented next. In a natural stream the velocity profile throughout the depth can be represented by the conditions shown in Fig. 39. As can be seen in Fig. 39, the rate of change in velocity (u) over depth (y) (the velocity gradient) changes as a function of depth. It is most pronounced near the stream bed where the local velocities may be irregular when vortices are being shed behind large roughness elements. The velocity gradient (du/dy) in association with viscosity governs the shear stress on the bed particles (Table 11, component 1).

Table 11. Summary of equations used in the analysis of fish and flow relationship;.

	Component	Equation	Applications	Definition of Terms* (Dimensions: Force; Length; Time; Mass)
(1)	Water Viscous Forces	$\tau = \mu du/dy$	Viscous forces. Reynolds stresses, boundary shear stress. sediment transport. velocity profile.	τ = shear stress (force/unit area). (F/L^2) μ = viscosity (FT/L^2) u = local velocity (L/T) at depth, y
(2)	Boundary Shear Stress	$\tau_o = \gamma R S_e$	Gravel size in spawning area. (see note after 6 re: S_e)	γ = specific weight of water (F/L^3) R = hydraulic radius of channel (L) S_e = slope of energy gradient (L/L)
(3)	Energy Relationships	Bernoulli Equation $y = V^2/2g = Z = C$	Energy lost In flow; changes in depth, pressure, kinetic energy and position	y = depth (L) V = mean velocity over depth (y). (L/T) Z = potential (position) energy about datum (LF/F)
(4)	Specific Energy	$E_s = y = V^2/2g$ Measured above stream bed	Determining state of flow, whether flow is deep and slow moving (subcritical velocity) or fast and shallow (supercritical).	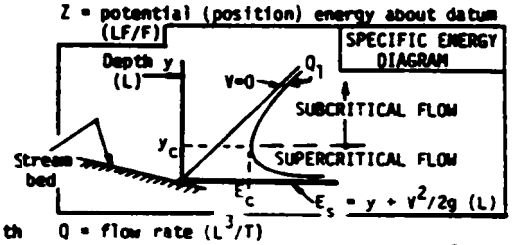
(5)	Continuity or Flow	$Q = AV$ $Q = A_1V_1 = A_2V_2$..	used in conjunction with energy equation to calculate water surface profiles, stage-discharge relations, etc.	Q = flow rate (L^3/T) A = cross-sectional area of channel (L^2) V = mean velocity of flow (L/T)
(6)	Manning's Equation	$V = (1.49/n)R^{2/3}S_e^{1/2}$	To determine mean docity based on characteristics of channel	n = empirical roughness coefficient S_e = slope of energy grade line from Bernoulli Equation

Note: The slope of me channel bed (S_b) represents the rate of change (gradient) of the potential energy of the flow above some datum, or the gravitational attraction acting on the flow. When water surface slope (S_w) is parallel to the slope of the channel bed (S_b) they are equal to the slope of he energy gradient (S_e), and the flow is classified as uniform, normal flow which rarely occurs in natural, irregular channels, except on flatter gradients with fine grained bed materials.

(7)	Velocity Profile	For local velocity: $u/u_* = 5.75(\log y/k) + 8.5$ For mean stream velocity $V/u_* = 5.75(\log Y_o/k) + 6.0$	Determine velocity against which fish must swim near streambed, related to size of bed material, roughness	ρ = unit mass denisty (M/L^3) u_* = shear stress velocity. $\sqrt{\tau_o/\rho}$ (L/T) k = height of dominant bed material (L) y_o = mean depth of flow (L)
(8)	Drag Forces	Wake drag: $F_w = C_w \rho A_p V^2/2$ Skin (friction) drag: $F_f = C_f \rho A_s V^2/2$ Total drag: $F_t = C_t \rho A_s V^2/2$	Calculate resistance force In velocity field (such as in culvert flow) to fish movement upstream; estimate species ability to traverse high velocity regions.	F_w = wake force (F), pressure C_w = wake drag coefficient A_p = frontal protected area of fish (L^2) C_f = friction dreg coefficient A_s = surface area of fish (L^2) C_t = total drag coefficient
(9)	Power Required	$P = V(F_t)$	Fish power necessary to propel fish at a mean velocity, V.	P . (LF/T)
(10)	Momentum Force	$F_m = \rho Q(V_2 - V_1)$	Attraction Of fish by flows, impact of jets, impact force fish striking objects.	F_m = momentum force (F) V_2 = second velocity condition V_1 = initial velocity condition V_1 and V_2 are in the same direction.

*See text for more detailed explanation.

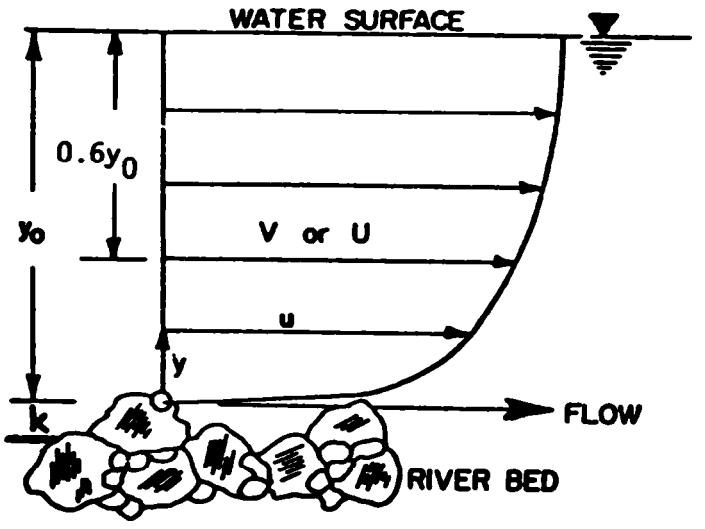

Figure 39. Nomenclature for velocity profile.

The shear stress on the boundary $_0$ can be calculated from

$$\tau_0 = \gamma R S_e \tag{7}$$

This shear stress is the mean value in the cross section with a hydraulic radius of R and an energy slope of S $_e$. Assuming that "normal" flow conditions exist (see note after Item 6, Table 11), and the water surface is parallel to the bed, obviously a steeper slope will cause a larger shear stress on the bed (assuming R is constant). But in reality, of course, for a constant discharge, if the slope increases (Manning's equation) then he hydraulic radius will be reduced.

The hydraulic radius is defined by the ratio of the flow area (A) to the contact surface between the water and the streambed (wetted perimeter, P) as

$$\text{Hydraulic Radius } (R) = \frac{\text{Flow Area (A)}}{\text{Wetted Perimeter } (P)} \tag{8}$$

In a wide channel the mean depth (y_0) can be substituted for the hydraulic radius such that

$$\tau_0 = \gamma y_0 S_e \tag{9}$$

The change in depth (y_0) must be calculated at various sections along the channel using the energy equation and the continuity or Manning's equation.

Obviously, assuming that y_0 remains constant (Q increases) as Se increases, the boundary shear stress increases and the size of the surficial bed material becomes larger. Locally, such as where flow concentrates alonq the outside bank of a 90° bend, shear stress on the boundary increases and becomes about 60 to 100 percent larger than the mean value in the bend.

Also, as slope increases and depth decreases, velocity must increase according to the continuity equation. As a result (for Q = constant) the specific energy in the flow changes. The kinetic energy term becomes more important as the flow becomes shallower and follows the relationship shown in the sketch of the specific energy in Table 11.

The single line in the specific energy (depth, y, plus velocity head, $V^2/2g$) diagram is for one flow. As depth y changes, velocity is calculated from the continuity equation to obtain the kinetic energy. Larger discharges would form a series of specific energy diagrams to the right of the one in Table 11. The slope and hydraulic radius are not needed in these calculations--only the continuity equation and the channel cross-sectional shape from which to determine area.

The Froude number of the flow

$$N_F = V/\sqrt{gy} \tag{10}$$

changes inversely as a function of depth y.

When the specific energy $(y + V^2/2g)$ is a minimum, then $N_F = 1.0$. This means that the flow is moving at just the speed at which a surface wave would move (VW = $\sqrt{gy}$) in that depth of water. This condition is classified as critical flow when $N_F = 1.0$., flowing at critical depth, y_c. Depths less than critical will have velocities greater than critical velocity and are classified as supercritical flow conditions. When water depth increases above critical, depth becomes the dominant energy term (pressure), velocities are less than critical, and these flow conditions are classified as subcritical.

One other important aspect relates the state of flow to the Froude number. At a control point, such as a spillway, fishway weir, or waterfall with a pool upstream, the water surface profile is calculated from the control upstream (subcritical flow--a wave will travel upstream $N_F < 1.0$). On the downstream side of the crest, the depth will try to decrease to some new normal depth for that bed slope ($S_w = S_b$ = Se). The water surface profile must be calculated from the crest in a downstream direction for supercritical flow (a wave caused by a disturbance will travel downstream). The velocity of the water is greater than that of a wave at that depth and N_F is greater than 1.0. Water surface profiles when the flow state is subcritical are classified as mild and as steep when the flow is supercritical.

The momentum force applies to the strength of a jet (e.g., fishladder attraction flow) to sustain itself after issuing into a pool or flowing stream.

$$F_m = \rho Q(V_2 - V_1) \tag{11}$$

It can be readily visualized that when a jet is issuing from a chamber into a quiet pool, then the jet velocity (VI) is reduced to essentially zero at some point downstream (V_2) by entrainment of flow and viscous forces (shear stress between the edge of the jet and the quiet water). A larger discharge (Q) issuing at the same velocity would require a greater distance to bring V_2 to zero.

If a jet is issuing into a flowing stream, then the distance through which the jet will be attractive will depend on its direction with respect to the direction of the stream and the relative velocity of the jet to the stream. The attraction of upstream migrating salmonids to high velocity (and thus high momentum) jets is discussed in a later section in which a new method for the analysis of attraction flows is developed. An analytical model for the comparison of fish energy expenditures using different modes of fishway passage is developed in the next section.

A CONCEPTUAL, ANALYTICAL MODEL OF THE ENERGY REQUIREMENTS OF ASCENDING FISH

The following is an analysis of energy requirements for fish migrating upstream past velocity and elevation barriers. Three different cases are considered: (1) swimming through ports in a fish ladder; (2) swimming up a sloping channel such as a spillway or waterfall face, chute, or culvert; and (3) leaping over a waterfall or a weir.

Basic Fluid Mechanics and Fish Capabilities

The total energy required to satisfy the above conditions is due to a combination of pressure forces and drag forces. The energy requirement of the fish to ascend in elevation, due to the pressure force alone, is the same as the increase in potential energy (Ziemer and Behlke, 1966).

$$E_p = W \Delta H \tag{1}$$

where: E_p = the energy requirement due to the pressure force, ft-lb;
W = the weight of the fish. lb; and
ΔH = the difference in the water surface elevation, ft.

Energy requirements caused by drag forces are calculated from

$$E_d = Dd \tag{2}$$

where: D = the drag force, lb; and
d = the distance through which the drag force acts, ft.

The drag force on the fish can be calculated by the standard equation

$$D = C_d A \rho (V_f)^2/2 \tag{3}$$

where: D = the drag force on the fish, lb;
C_d = the drag coefficient, dimensionless;
ρ = the density of the fluid, for water at normal temperature, 1.94 slugs/ft^3;
V_f = the velocity of the fish relative to surrounding water; and
A = a certain drag-related area.

For most fluid mechanics research the area, A, is defined as the frontal silhouetted area viewed in the direction of flow. Researchers have used different definitions for the area which has a profound effect on the value of drag coefficient, Cd. Ziemer and Behlke (1966) used $A = L^2$, where L is the length of the fish. Weihs (1974) defined it as the total surface area of the fish. He mentioned that experimental data by Lighthill (1971), and Webb

(1971) showed that the drag of swimming fish is increased by a factor of approximately three times the value for a rigid body. Estimated of muscular efficiencies by Alexander (1967) led to the same conclusion of increased drag during active swimming. When a fish is swimming its surface area remains the same, while efficiencies by Alexander (1967) led to the same conclusion of increased drag during active swimming. When a fish is swimming its surface area remains the same, while the projected frontal area can be expected to increase by about three times. For an adult salmon 22 inches long, 4.4 inches deep, and 2.5 inches wide, the frontal area is estimated to be 11.0 in2 or 0.076 ft^2 while in a resting position. When swimming, the frontal area, A, will increase to about 0.23 ft^2.

In general, the length to height ratio of a fish is 5 and length to width is 0.8. The frontal area, A, is estimated to be equal to a rectangle of the height times the width. The rectangular area is slightly larger than the actual frontal area.

$$A = HW$$

$$A = (L/5)\ (L/8.8)$$

$$A = 0.0227\ L^2 \qquad (4)$$

From this equation the frontal area of different sizes of fish can be calculated as follows:

Table 12. Frontal area as a function of fish length when resting and swimming

Length, L		Frontal Area, ft^2	
		At rest	When swimming
inch	ft.	$A_r = 0.0227\ L^2$	$A_s = 3A_r = 0.0682\ L^2$
6	0.5	0.0057	0.017
12	1.0	0.0227	0.068
18	1.5	0.0511	0.153
22	1.8	0.0764	0.229
24	2.0	0.0909	0.273
30	2.5	0.1420	0.426

The general shape of a fish is close to that of a two-dimensional elliptical airfoil. Daily and Harleman (1966) indicate for a two-dimensional elliptical airfoil with an aspect ratio (length to height) of 5, Cd is 0.06 at a Reynolds number of 4×10^5. The Reynolds number is defined as $V_f L/\nu$, where L is a characteristic dimension such as fish length, and ν is kinematic viscosity. At a temperature of 50 degrees Fahrenheit, the kinematic viscosity of water is 1.4×10^{-5} ft^2/sec. The fish speed, V_f, can be divided into three classes of sustained, prolonged, and burst for which upper values were listed earlier in Table 9. A summary of selected values is given in Table 13.

Table 13. Selected Values of Burst Speeds (fps)

	Lower Limit (Maintained for 15 seconds)	Upper Limit (Maintained for 6 seconds)
Chinook	10.8	22.4
Steelhead	13.7	26.5
Coho	10.6	21.5
Chum (or Pink)	7.7	16.0
Approximate Averages	11.0	22.0

Brett (1963) claimed that the power required by a fish when swimming is about 50 percent of the power recorded in dead fish drag tests. However, the drag force during swimming was not measured directly. Brett's conclusion was based on oxygen consumption of fish measured by the rate of oxygen depletion in circulating water, and the oxygen-debt in fish was determined by tracing the recovery rate under resting conditions. These procedures may not be an accurate determination of swimming power. It is known that protein can be used as an energy source when in a lack of oxygen situation.

Swinning Through a Port

When a fish swims through a submerged port it encounters both the pressure force and the drag force. In most fish ladders the water surface drop through each port is usually fixed at one foot. If the weight of a fish is assumed to be 4.0 lbs, the energy required to swim against one foot of difference in the water surface elevations is

$$E_p = W \Delta H = (4)(1) = 4 \text{ ft-lb}$$

assuming no use of its air sack for buoyancy.

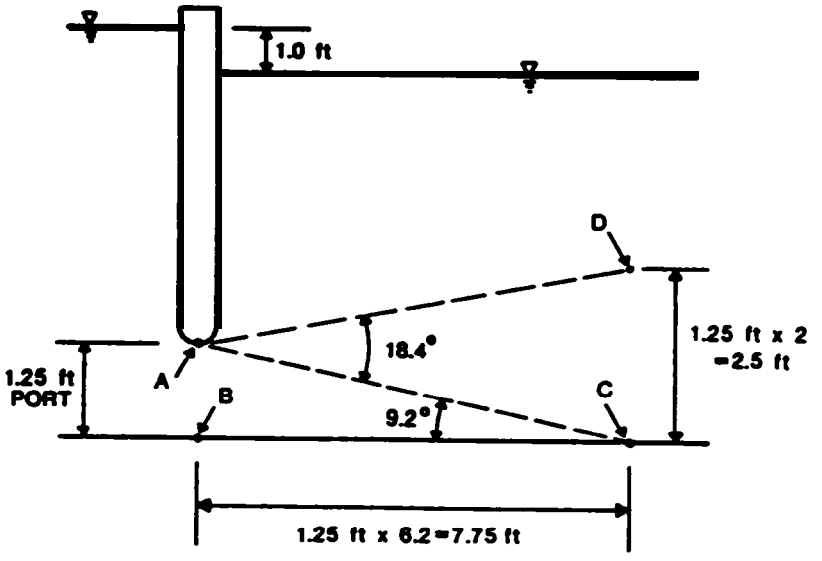

ABC - CONE OF CONSTANT VELOCITY
V=8 fps

DAC - CONE OF MIXING, VELOCITY CHANGES
FROM 8 fps ALONG AC TO
0 fps ALONG AD

Figure 40. Velocity distribution downstream of a port.

For a 15-inch square port, the velocity distribution downstream of the port is shown in Fig. 40 (Albertson, 1950). The average water velocity at a streamlined port opening with one foot of head drop is about 8 fps. Therefore, the fish must swim through a port at a speed higher than 8 fps.

Assuming the fish swims at the lower average burst speed of V_f = 11 fps, the drag force on the fish is

$$D = C_d A \rho (V_f)^2/2 \qquad (5)$$

$$D = (0.06)(0.23)(1.94)(11)^2/2 = 1.61 \text{ lb.}$$

The relative position from which fish start to dart through the port is not always the same. They usually move close to the port to take a visual fix and/or to sense the velocity pattern before darting through the port. Sometimes they swim into the main jet stream and are pushed downstream before they can regain their orientation, and then they burst through the port. For this estimate it is assumed that fish start to dart from a location two feet downstream. The two-foot distance is measured from the port to the mass center of the fish. Therefore, the energy requirement due to the drag force is

$$E_d = D_d = (1.61)(2) = 3.22 \text{ ft-lb} \tag{6}$$

The total energy requirement of a four-pound fish to swim through a port with a one-foot pool surface drop is

$$E_T = E_p + E_d = 4 + 3.22 = 7.22 \text{ ft-lb} \tag{7}$$

Since the cone of constant velocity extends about 7.5 feet downstream, the fish encounters essentially a constant downstream velocity of 8 fps during the two-foot swim through the port. If the fish swims at a relative velocity with respect to the surrounding water at 11 fps upstream, then the fish speed with respect to the fish ladder is only 3 fps upstream. It would take about 2 ft/3 fps = 0.67 seconds to swim through a port. Using similar calculations it would take ET = 3.61 ft-lb for the same four-pound fish to swim through a port with 0.5 feet of drop between pools. At 2.0 feet of drop ET = 14.45 ft-lb.

Swimming Up a Sloping Channel

Examples of flow down an open channel, classified as a "velocity chute" are shown in Fig. 41. When a fish is swimming up such a channel, the depth of water at the head and at the tail of fish are assumed to be the same. Thus, there is no difference in pressure force in this motion, and the energy requirement to overcome the pressure difference is zero. So the total energy requirement is due to the drag force only and ET = Ed. Near the top of the velocity chute there is a rapid decrease in velocity as the fish nears the upstream pool. For these calculations it is assumed that the flow is at normal depth throughout the length of the slope.

Take the example of a wide ramp with a normal water depth $y_n = 1.0$ foot. The hydraulic radius of a wide channel is approximately equal to the depth of flow. Manning's equation (Daily and Harleman, 1966) can be used to calculate the friction energy loss on the chute as

$$V_w = (1.49/n)\ (R)^{2/3}\ (S_e)^{1/2} \tag{8}$$

from which

$$S_e = (n/1.49)^2\ (V_w)^2/(R)^{4/3} \tag{9}$$

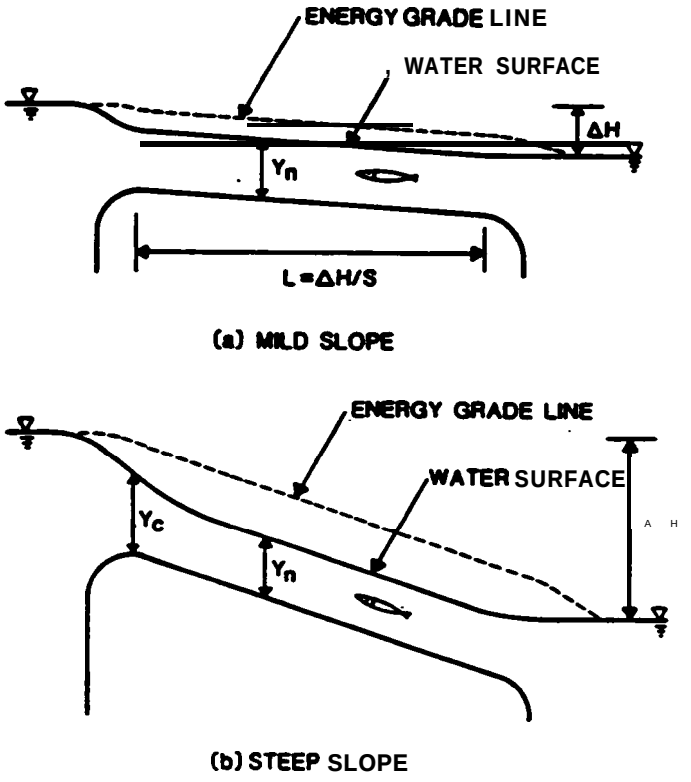

Figure 41. Open channel flow.

where: V_w = the average water velocity in the channel, fps;
n = Manning's roughness coefficient;
R = the hydraulic radius, ft; and
S_e = the slope of the energy grade line.

For a short chute, the entrance loss $(0.2\ (V_w)^2/2g)$ and the exit loss $(1.0\ (V_w)^2/2g)$ cannot be neglected. The energy equation of the flow is

$$\Delta H = 0.2\ (V_w^2/2g) + S_e\ L + (V_w^2/2g)$$

and substituting Eq. (9) for Se

$$AH = 1.2\ (V_w^2/2g) + (n/1.49)2\ [(V_w)^2\ /\ (R)^{4/3}]\ L$$

$$= [1.2 + 2g\ (n/1.49)2\ /\ R^{4/3}\ (L)]\ (V_w^2/2g) \qquad (10)$$

or $$V_w = [2g\ \Delta H/(1.2 + 2g\ (n/1.49)2\ /\ (R)^{4/3}\ L)]^{1/2} \qquad (11)$$

Using the customary units, $g = 32.2\ ft/sec^2$, then

$$V_w\ (fps) = 8[\ \Delta H/(1.2 + 29.0\ n^2\ /\ R^{4/3}\ L)]^{1/2} \qquad (12)$$

For the case of normal depth, $y_n = R = 1$ foot and $n = 0.01$, the water velocity in the ramp can be calculated by Eq. (12) and is shown in Table 14 for several elevation differences, AH, and channel slopes, S_c.

Take the case for $H = 1$ foot, $n = 0.01$, and $S_c = 1/100$, the average water velocity in the ramp is 6.6 fps. If the fish swims at the lower burst speed of 11 fps, it would take 100/(11.0 - 6.6) = 100/4.4 = 23 seconds to complete the passage. This is longer than 15 seconds for which the fish can maintain that speed. If it uses the maximum burst speed of 22 fps, it will take 100/(22.0 - 6.6) = 100/15.4 = 6.5 seconds, which is slightly longer than the 6 seconds that the fish can maintain its maximum speed. This may or may not be, by definition, an impassable situation. In order to successfully pass longer chutes, the water velocity must be slower than the sustained speed which is defined as the speed fish can maintain for 200 minutes. An average sustained speed for chinook and coho is 3.4 fps, 4.6 fps for steelhead, and 2.6 fps for chum.

The situation for passage can be greatly improved if the roughness coefficient is increased, which is the basis of Denil's fishway. For instance, if the Manning's roughness coefficient is increased from 0.010 to 0.030 or 0.05, the velocity in the ramp is much reduced.

For $n = 0.03$, AH = 1 foot, and $S_c = 1/100$, the average water velocity is 4.1 fps. At the lower burst speed of 11.0 fps, it takes 100/(11 - 4.1) = 14.5 seconds which is slightly less than 15 seconds for which the fish can maintain its speed. Therefore, this is a passable condition which some fish will pass and some will not, depending on their condition.

For $n = 0.03$, AH = 2 feet, and $S_c = 1/100$, the water velocity is 4.5 fps. At lower bursting speed of 11 fps, it takes 200/(11.0 - 4.5) = 31 seconds which is longer than the fish can maintain (15 seconds). At a burst speed of 22 fps, it takes 200/(22.0 - 4.5) = 12.9 seconds, which is also longer than 6.0 seconds for that speed. This is an impassable situation. However, it can be made passable by dividing it into two channels with AH = 1 foot, and with a resting pool at the midpoint.

Table 14. Water velocity in a chute for roughness, $n = 0.01$, and hydraulic radius,

Water Average Velocity: V_w (fps) = 8 $[\Delta H/(1.2 + 0.0029L)]^{1/2}$

Elevation Difference H	Channel Slope S_c	Channel Length L	0.0029L	1.2 + 0.0029L	$\frac{AH}{(1.2 + .0029L)}$	W Ve
ft	(-)	ft	ft	ft	(-)	
1	1/100	100	0.290	1.49	0.67	
	1/10	10	0.029	1.23	0.81	
	1/1	1	0.003	1.20	0.83	
2	1/100	200	0.580	1.78	1.12	
	1/10	20	0.058	1.26	1.59	
	1/1	2	0.006	1.21	1.66	
4	1/100	400	1.160	2.36	1.69	
	1/10	40	0.116	1.32	3.04	
	1/1	4	0.012	1.21	3.30	
6	1/100	600	1.740	2.94	2.04	
	1/10	60	0.174	1.37	4.37	
	1/1	6	0.017	1.22	4.93	

In order to calculate the energy requirement for swimming up a steep ramp, it is necessary to estimate the swimming speed of the fish. It can be assumed to vary from 1.2 times the water velocity up to a maximum burst speed of 22 fps. The energy requirement is $E_T = Ed = Dd = \Delta C_d A (V_f)^2/2\ d$. For C_d = 0.06, A =0.23 ft^2, and ρ = 1.94 slug/ft^3,

$$D = 0.0133\ (V_f)^2 \tag{13}$$

$$E_T = 0.0133\ (V_f)^2 d \tag{14}$$

The values of ET are listed in Table 15. For the case of fish drag while swimming up a sloping channel, the channel (chute) length, L, equals distance, d.

In order to calculate the distance a fish can travel up a sloping channel, it is necessary to obtain information on fatigue time versus speed, $t_f = f(V_f)$. It is preferable to have one equation covering the full range of velocity instead of a graphical solution.

For this sample calculation for an adult sockeye, the following relation has been used:

Fatigue Time t_m, minutes	t_s, sec	Upper Speed fps	Description of Speed
200.00	12,000	3.2	Sustained
0.25	15	10.2	Prolonged
0.10	6	20.6	Burst

The following form of the equation may be used to describe the $t_f = f(V_f)$,

$$t_f\ (sec) = k/(V_f - V_o) \tag{15}$$

where: t_f = the fatigue time, seconds;

V_f = fish speed, fps; and

V_o = upper sustained speed, fps, defined as the migration speed under aerobic metabolism which does not cause fatigue. For adult sockeye, V_o = 3.2 fps. The constant k (in feet) can be determined for prolonged and burst speeds

$$k = t_f\ (V_f - V_o)$$

Table 15. Energy requirement for swimming up a chute for roughness, n = 0.0
radius, R = 1 foot.

Elevation Difference	Channel Slope	Channel Length	Water Velocity (Table 3)	Fish Velocity 1.5 V_w	V_f^2	Drag Force	Ener Requi
H	S	L	V_w	V_f		D	ET
ft	(-)	ft	fps	fps	fps^2	lb	ft-l
1	1/100	100	4.1	6.2	37.8	0.50	50.
	1/10			9.9			
	1/1	10	7.2	10.8	116.6	1.55	11.
			4.5	6.8			
2	1/100	200	8.6	12.9	45.6	0.61	121.
	1/10	20	[illegible]	[illegible]	166.4	2.20	44.
	1/1	2	20.1	15.2	229.5	3.05	6.
			4.7	7.1			
4	1/100	400	10.6	15.9	49.7	0.66	264.
	1/10		[illegible]	[illegible]			
	1/1	40	14.0	21.0	252.8	3.36	123.
			4.8	7.2			
6	1/100	600	11.8	17.7	51.8	0.69	413.
	1/10	60	[illegible]	[illegible]	313.3	4.17	250.
	1/1	6	16.8	22.0	484.0	6.44	38.

For prolonged speed $k = 15\ (10.2 - 3.2) = 105.0$ feet

For burst speed $k = 6\ (20.6 - 3.2) = 104.4$ feet

The k values are nearly constant and the average value is assumed to be 105 feet. Therefore, the equation for adult sockeye is

$$t_f\ (\text{sec}) = 105/\ (V_f - 3.2) \tag{16}$$

Eq. (16) is plotted on Fig. 42. The distance adult sockeye can swim is

$$L(\text{ft}) = (V_f - V_w)\ t = (V_f - V_w)\ \frac{105}{V_f - 3.2} \tag{17}$$

where V_w = water velocity in the channel, fps. From Eq. (12)

$$V_w\ (\text{fps}) = 8 \left[\frac{AH}{1.2 + 29\ n^2/R^{4/3}\ (L)}\right]^{1/2} \tag{18}$$

where L is the length of the channel which is equal to $L = AH/S$. For a long channel, wherein friction is an important energy loss, the term 1.2 in Eq. (12), which represents entrance and exit losses, can be neglected so that

$$V_w\ (\text{fps}) = 8 \left[\frac{LS}{29\ n^2/R^{4/3}\ (L)}\right]^{1/2}$$

and

$$V_w = (1.49/n)\ (\ R^{2/3}\ (\sqrt{S})) \tag{19}$$

where $1.49 = 8/\sqrt{2g}$ and the L cancels, yielding Manning's equation.

Assuming the fish migration velocity upstream is 20 percent greater than the downstream water velocity, then $V_f = 1.2\ V_w$, and Eq. (17) becomes

$$L\ (\text{ft}) = (0.2\ V_w)\ \frac{105}{1.2V_w - 3.2}$$

$$L = 21\ \frac{V_w}{1.2\ V_w - 3.2} \tag{20}$$

Combining Eq. (20) with Eq. (19), and letting R = 1 ft as before, yields

$$L\ (ft) = 21 \frac{\frac{1.49\sqrt{S}}{n}}{1.2\ \frac{1.49\sqrt{S}}{n} - 3.2}$$

$$= 31.3\ \frac{\sqrt{S}}{n}\ \frac{1}{\frac{1.79\sqrt{S}}{n} - 3.2}$$

$$= 31.3\ \frac{\sqrt{S}}{n}\ \frac{n}{1.79\sqrt{S} - 3.2\ n}$$

$$L = \frac{31.3\sqrt{S}}{1.79\sqrt{S} - 3.2\ n} \qquad (21)$$

where $V_0 = 3.2$, the upper sustained speed, and the hydraulic radius $R = 1$ foot.

Distance values for adult sockeye are listed in Table 16, and plotted in Fig. 43. Re-arranged as a function of the upper sustained speed, V_0, in Eq. (21) is

$$1.79\sqrt{S} - V_0\ n = [31.1\sqrt{S}]\ /L$$

$$1.79\sqrt{S} = [31.3\sqrt{S}]\ /L + V_0\ n$$

or,

$$V_0\ n = 1.79\sqrt{S} - [31.3\sqrt{S}]\ /L \qquad (22)$$

when $R = 1$, and the distance afish can swim on a particular slope becomes infinity when $V_0 n \longrightarrow 1.79\sqrt{S}$. Thus, stronger fish can swim farther, and all fish can swim farther as the channel roughness is increased.

Recall that this solution was for a wide channel in which $R = y = 1$ foot. The more general equation for the swimming distance before tiring, for any depth of flow, y, and hydraulic radius, R, would be

$$L\ (ft) = 21 \frac{(1.49/n)\ (R)^{2/3}\ (S)^{1/2}}{1.2\ (1.49/n)\ (R)^{2/3}\ S^{1/2} - 3.2}$$

$$= 31.3 \frac{(R)^{2/3}\ (S)^{1/2}}{1.79\ (R)^{2/3}\ (S)^{1/2} - 3.2\ n}$$

Table 16. Distance against velocity for adult sockeye swimming up an inclined plane using Eq. (21)

Manning's Roughness n	$V_0 n = 3.2\ n$	Slope S	$\sqrt{S}$	$1.79\sqrt{S}$	$1.79\sqrt{S} - V_0 n$	$31.3\sqrt{S}$	L (ft)
0.011	0.032	0.005	0.0707	0.1266	0.0946	2.213	23.4
		0.010	0.1000	0.1790	0.1470	3.130	21.3
		0.020	0.1414	0.2530	0.2210		20.0
		0.030	0.1732	0.3100	0.2780	5.420	19.5
		0.040	0.2000	0.3580	0.3260	6.260	19.2
		0.050	0.2240	0.4000	0.3680	7.000	19.0
		0.070	0.2650	0.4740	0.4420	8.280	18.8
		0.100	0.3160	0.5660	0.5340	9.900	18.5
0.02	0.064	0.005	Repeated for each n	Repeated for each n	0.0626	Repeated for each n	35.4
		0.010			0.1150		27.2
		0.020			0.1840		23.4
		0.030			0.2460		22.0
		0 [illegible]			0.2940		21.3
		0 [illegible]			0.3360		20.8
		[illegible]			0.4100		20.2
		0.070			0.5020		19.7
		0.100					
0.03	0.096	0.005			0.0306		72.3
		0.010			0.0830		37.7
		0.020			0.1570		28.2
		0.030			0.2140		25.3
		0.040			0.2620		23.9
		0.050			0.3040		23.0
		0.070			0.3780		21.9
		0.100			0.4700		21.2
0.04	0.128	0.005			0.0014		
		0.010			0.0510		61.4
		0.020			0.1250		35.4
		0.030			0.1820		29.8
		0.040			0.2300		27.2
		0.050			0.2720		25.7
		0.070			0.3460		23.9
		0.100			0.4380		22.6
0.05	0.160	0.005			-0.0330		
		0.010			0.0190		164.7
		0.020			0.0930		47.6
		0.030			0.1500		36.1
		0.040			0.1980		31.6
		0.050			0.2400		29.2
		0.070			0.3140		26.4
		0.100			0.4060		24.4

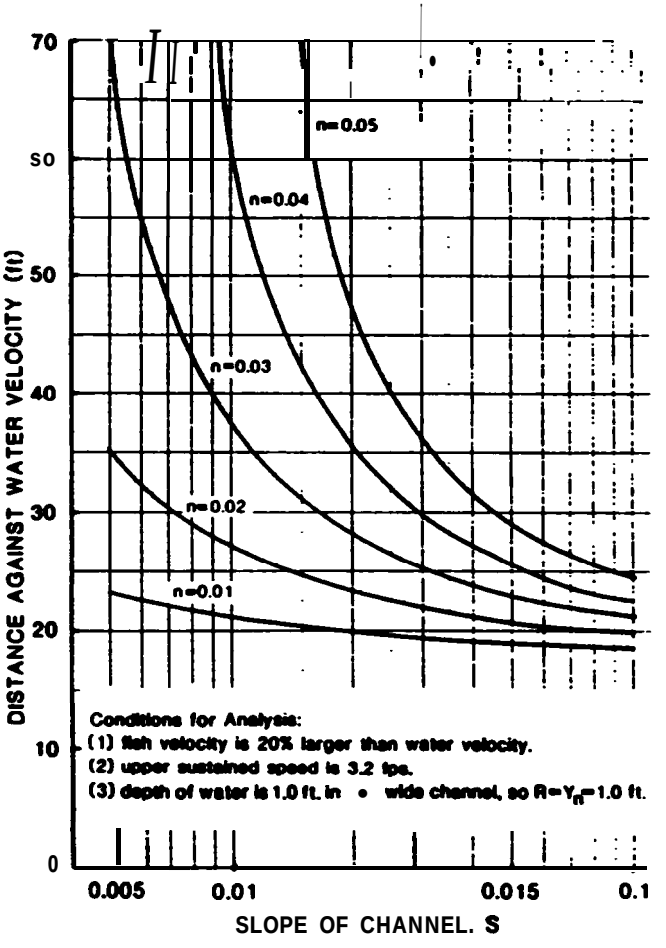

Fig. 43. Distance that adult sockeye can swim before tiring as a function of channel roughness (n) and slope (S_c).

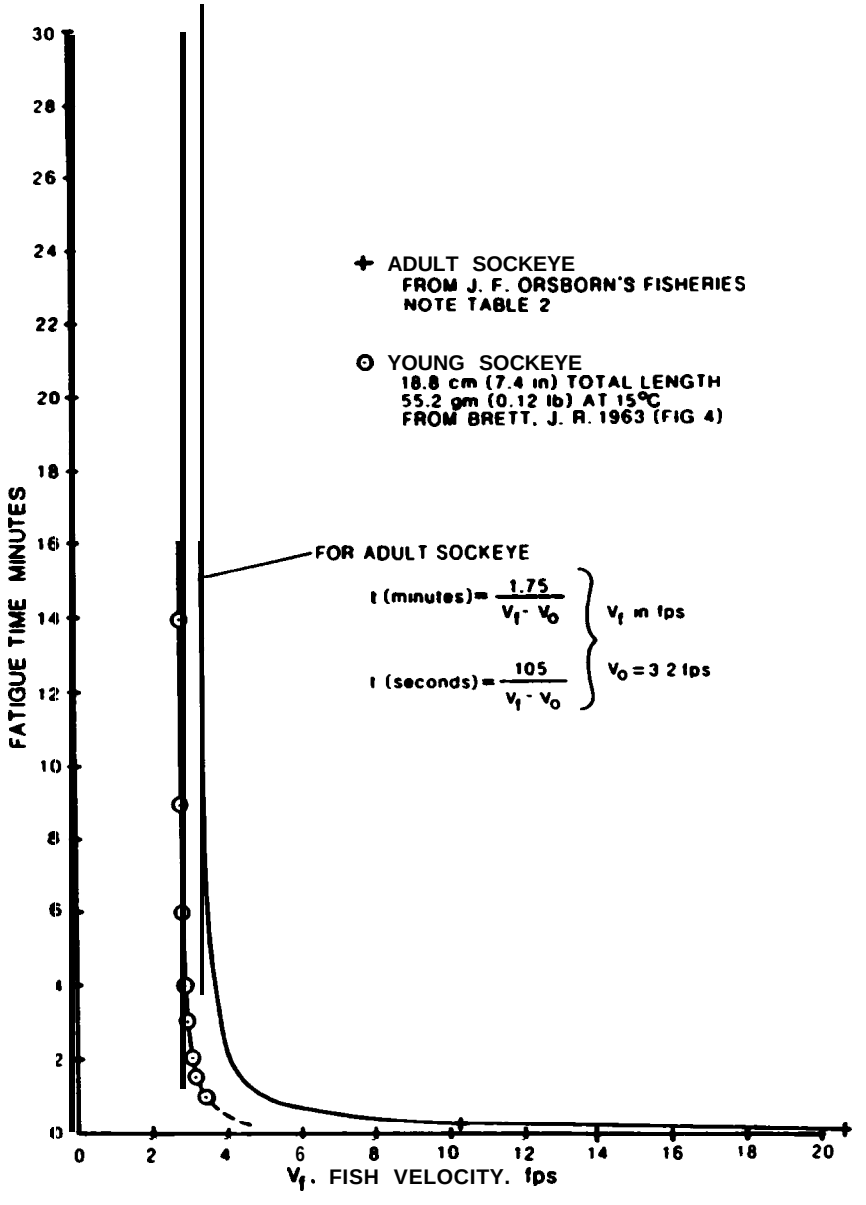

Fig. 42. Sockeye swimming velocity related to fatigue time.

In the form of Eq. 22,

$$V_0 n = 1.79\ (R)^{2/3}\ (S)^{1/2} - [31.3\ (R)^{2/3}\ (S)^{1/2}]\ /\ L \qquad (23)$$

when the fish velocity, V_f, is 20% greater than the mean water velocity. The entrance and exit energy losses are neglected by assuming they are small compared with the channel friction loss. All these losses could be accounted for by using Eq. (12), and repeating the development of Eq. (23).

Leaping Over a Waterfall or Weir

During leaping, the fish passes through air rather than dense water. At a temperature of 50 degrees Fahrenheit, the density of air is 0.00242 slugs/ft^3 which is 800 times lighter than water (1.94 slugs/ft^3). The drag force in the air becomes negligible even at maximum burst speed. The total energy requirement of leaping is solely to compensate for the potential energy increase at the new elevation, ET = E_p = $W\Delta H$. For a one-foot drop and four-pound fish, the energy requirement is 4 ft-lb. In order to reach the new elevation, the fish must have a vertical velocity component of $V_y = \sqrt{2g\ \Delta H} = 8\sqrt{\Delta H}$ when it jumps from the lower quiet pool without a standing wave. Generally the initial leaping velocity is at an angle about 60 to 70 degrees to the horizontal as shown in Fig. 44.

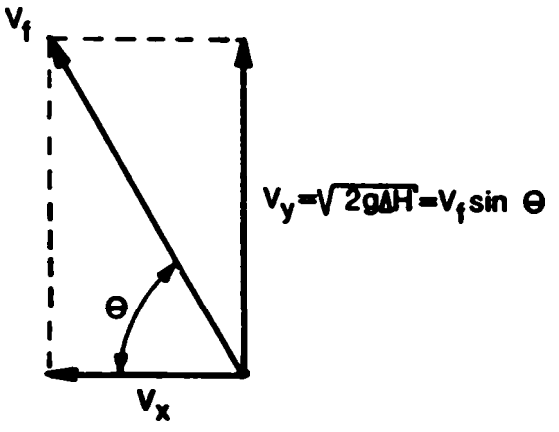

Fig. 44. Angle of velocity of leaping from a quiet pool.

The velocity of the fish $V_f = V_y \sin\theta = \sqrt{2g\ \Delta H}/\sin\theta$. The energy for leaping, ET = E_p is

$$E_p = 1/2mV_f^2 = 1/2(W/g)(V_f)^2 = (W/(2g))(\sqrt{2g\Delta H}/\sin\theta)^2$$
$$= (W/(2g))(2g\,\Delta H/\sin^2\theta)$$
$$= W(\Delta H/\sin^2\theta)$$

For a fish with $W = 4$ lb and $\theta = 60$ degrees:

$$E_p = 4\,[\Delta H/(\sin^2 60°)] = 5.33\,\Delta H \text{ (ft-lb)} \tag{24}$$

The energy requirements in Table 17 are for leaping without any help from the standing wave in front of a waterfall or weir. When the jet is a free fall into water of sufficient depth (about 1.25 times the height of the falls) the fish consistently leap from a point where the pool surface bulges upward, known as a standing wave (Stuart, 1962). Apparently, fish have the instinct to take advantage of the upward current to help in leaping, thus reducing their energy requirements.

Table 17. Energy Requirement for Leaping from a Level Pool for a Four-Pound Fish

Elevation Difference ΔH ft	Energy Required $E = 5.33\,\Delta H$ ft-lb
1	5.3
2	10.7
3	16.0
4	21.3
5	26.7
6	32.0

From tests on weir-type fish ladders by Hilliard (1983) in the Albrook Hydraulics Laboratory at Washington State University , the average standing wave rises above the pool surface by 0.024 ΔH for pool depths ranging from (0.80 to 1.50) ΔH. The upward (vertical) water velocity, V_W, at the standing wave due to the rising velocity of air bubbles, is approximately

$$V_w = \sqrt{2g(0.024)\,\Delta H} = 1.24\sqrt{\Delta H} \tag{25}$$

With this upward velocity component taken into consideration, the vertical fish velocity, V_f relative to the surrounding water is:

$$V_f = V_y - V_w$$

$$V_f = 8\sqrt{\Delta H} - 1.24\sqrt{\Delta H}$$

$$V_f = 6.76\sqrt{\Delta H} \qquad (26)$$

The energy requirement for vertical leaping is:

$$E = W(V_f)^2/2g$$

$$E = 2.84\ \Delta H \qquad (27)$$

There is an upstream (horizontal) water velocity component in a standing wave which also helps the fish leap (Stuart, 1962; Aaserude, 1984). The leaping angle, θ, can be increased to about 75 degrees for a standing wave in comparison to the 60-degree angle used in a still pool. The energy requirement for leaping from a standing wave is:

$$E = W\ (V_f)^2/2g\ (1/\sin^2\theta)$$

$$E = 3.04\ \Delta H \qquad (28)$$

Energy values for the four-pound example fish are listed in Table 18. A more complete hydrodynamic analysis of the leaping mode is presented in Part 2 of this report (Aaserude and Orsborn, 1985).

Table 18. Energy requirement for leaping from a standing wave for a four-pound fish

Elevation Difference ΔH (ft)	Energy Required $E = 3.04\ \Delta H$ (ft-lb)
1	3.0
2	6.1
3	9.1
4	12.2
5	15.2
6	18.2

Summary of Energy Requirements for Fish to Ascend Through Ports, Up Chutes or Over Weirs

A comparison of the energy required for fish to ascend elevations of 1 to 6 feet by various modes--through a port, up a chute, or by leaping, is presented in Table 19 for the assumed flow and fish conditions. As discussed, these modes of transportation from one pool of a fishladder to another require different amounts of energy expenditure. The analysis does not solve the general equations for all the variables (such as different fish species), but it does define the concepts of the model. Further work in this area of fish capabilities should be developed.

Certain conclusions are obvious from the values in Table 19.

- Swimming up a chute takes less energy only for elevation differences of two feet or less and on a 1/1 (45) channel slope.

- Leaping from a quiet pool takes a little less energy, but about the same amount that swimming through a port does, up to H = 2 ft.

- Leaping from a standing wave decreases the energy requirement to about 57 percent of the energy required to leap from a quiet pool, but this is a function of the amount of air rising in the standing wave, and thus the roughness of the weir crest and the height of the fall.

- For a comparative example, when AH = 4 feet in Table 19, swimming up a ramp 400 feet long at a 1 percent grade requires about 10 times as much energy as swimming through a port or leaping the 4 feet from a quiet pool. But leaping 4 feet from a standing wave requires only 4.6 percent of the energy to swim up a 400-foot ramp on a 1 percent slope, and only 42 percent of the energy required to swim through a port. One must realize that this is a comparative analysis and that port fishways are not designed with four-foot drops between pools, because of the prohibitive velocities through the ports.

The application of this biomechanical analysis to fish passage problems in culverts, up chutes, and through various fishway openings (port, slot and weir), should be developed for other variables such as species, port size and shape, slot opening and flow depth, and weir flow.

Table 19. Summary of energy requirements of a four-pound ascending fish swimming through a port, up a chute, and leaping an equivalent height.

Elevation Difference AH	Swim Through Ports	Swim Up a Ramp 1/loo	1/10	1/1	Leap From Level Pool	Leap From Standing Wave
		Table 15			Table 17	Table 18
ft	ft-lb	ft-lb	ft-lb	ft-lb	ft-lb	ft-lb
1		50.3	13.0	1.6		3.0
2	7.2				5.3	
3	14.4	121.0	44.0	6.1	16.0	9.1
4	28.9	264.0	134.4	23.5	21.3	12.2
5	36.1	--	--	--	26.7	15.2
6	43.3	413.4	250.0	38.6	32.0	18.2

THE ROLES OF STIMULUS, RESPONSE, AND STRESS IN THE DESIGN OF FISH PASSAGE STRUCTURES

Introduction

Two primary considerations need to be addressed when discussing fish passage structures. One is the biology of the fish and how the fish's adaptations prepare it for obstacles encountered during the spawning run. Secondly, if a fish passage structure is to aid upstream migration, it should do so without causing additional stressing factors to the upstream movements of the fish.

Hoar (1958) addresses the first concern and categorizes the fish, its environment and how it deals with that environment into a series of stimuli and responses. Responses may be physiological or behavioral with behavior defined by Tinbergen (1951) as the "total movements of the intact animal." An ethological approach (i.e., objective analysis) to fish behavior will be used and explanations of behavior may be in terms of immediate cause-effect relations, or evolutionary adaptations.

Hoar (1958) describes behavior as a series of fixed stereotyped movements. These movements can be the result of a specific internal physiological state or in response to definite factors (termed "releasers") from the external environment. Normally, there is a steering or orienting component to the movement. The term "appetitive behavior" refers to extended activity which frequently precedes the goal situation. This behavior may be described as an "urge" or "appetite".

Three major levels of movements can be described:

1. drive--"the complex of internal and external states and stimuli leading to a given behavior (Thorpe, 1951; Baerends, 1957, as cited in Hoar, 1958);
2. appetitive behavior;
3. the consummatory act.

The series of behavioral movements is set in motion by what Hoar terms "specific releasers" and they are then guided by conditions in the environment. Behavior is a very plastic phenomenon and, depending on circumstances, may not proceed directly from the drive to the consummatory act. Various factors are responsible for the plasticity of instinctive behavior:

1. The intensity of movements may vary in relation to the amount of information received;
2. releaser information is sometimes received through more than one sensory channel; and
3. there may be a change in the intensity of internal motivation.

When two incompatible instincts are simultaneously aroused, or when the normal releaser disappears before the behavior pattern is completed, inappropriate, illogical behavior patterns may result. These are termed "displacement activities." If a strong disturbance occurs, the behavior might regress back to an earlier stage in the hierarchical organization. This condition is known as *fall back."

Within this context, the behavior of a fish negotiating fish passage structures will be discussed, including specific stimulatory or inhibitory factors which should be minimized in the design of passage structures.

Table 20 lists various passage structure and environmental components which contribute to the bio-hydraulic conditions present in a fishway. Also listed are factors which could be considered stimuli, inhibitors, and stressors.

Stimulus and Response

Behavioral patterns of animals can be characterized as a series of responses to stimuli, both external and internal. In the specific case of the upstream migrations of adult salmonids, numerous environmental factors are involved. These factors and the responses they elicit in migrating fish must be recognized if man-made structures are to assist fish (or at least not hinder them) in overcoming natural and artificial obstacles encountered in river systems. A general discussion of environmental factors which may serve as potential stimuli will be followed by a more specific treatment of a pool:weir fish ladder design.

Stuart (1962) in studies on potential stimuli identified direction and strength of flow as directing and releasing stimuli. The natural orientation of movement of a fish is to the direction of the flow. A threshold level of flow is required to initiate and maintain orientation and movement. These threshold levels vary with the size of fish and presumably also vary with species. Sudden increases in flow can initiate upstream movement (Elson, 1939; Hayes, 1953). However, excess flow may be inhibitory. In general, an increase in the rate of flow stimulates greater activity in the fish (Banks, 1969).

The implications for fish passage design are obvious. Sufficient flow must be maintained in order to attract the fish to the pass and to stimulate the fish to move through the fishway. Extreme flows must be avoided because of their inhibitory effect on upstream movement.

Temperature serves as both a stimulatory and inhibitory factor. Within their preferred temperature range, juvenile coho and Atlantic salmon exhibited the greatest frequency of leaping behavior (Symons, 1978). Fisher and Elson (1950) demonstrated that a species' preferred temperature range is also the temperature of maximum response to an external stimulus. Maximum cruising speeds are also exhibited within the selected temperature range

Table 20.--Environmental passage conditions for a fishway unit

Items	Passage Conditions
Variables Contributing to Hydraulic Conditions in a Fish Passage Structure	1. Water a. Flow b. Velocity c. Turbulence d. Momentum e. Entrained Air f. Temperature g. Chemistry h. Debris 2. Passage Opening (Weir, Port, Channel, Slot) a. Difference in pool elevations b. Width c. Type of opening d. Jet geometry e. Flow control 3. Lower Pool (Fishway Entrance) a. Depth b. Pool geometry c. Standing wave d. Entrained air e. Volume of chamber f. Baffles or other structures
External Stimuli	1. Strength of standing wave/jet 2. Location for standing wave/jet 3. Attraction flow 4. Visual perception 5. Color 6. Boundaries 7. Streamlining flow downstream
Internal Stimuli	1. Temperature 2. Light 3. Season
Inhibitory Factors	1. Delay 2. Lack of sufficient flowthrough 3. Excessive flowthrough 4. Temperature barriers 5. Excessive turbulence
"Undue" Stress Sources	1. Mechanical damage 2. 'Hyperactivity 3. Temperature 4. Water quality 5. Delay- 6. Crowding 7. Disease 8. Changes from natural stream environment

Extreme temperatures may elicit avoidance behavior in fish if a temperature front is encountered, or may ultimately result in the death of the fish if avoidance is impossible. Fishways should draw water from areas such that water within and exiting the fishways is at a similar temperature as the downstream receiving water at the fishway entrance.

Specific information on the role of dissolved gases, trace minerals, and pH as stimuli is not available. Banks (1969) suggests that subtle effects on behavior may prevent the ascent of fishways by fish acclimated to water of different characteristics than the water exiting the pass.

Light intensity appears to function also as both a stimulus and an inhibitor. Light is necessary for salmonids to ascend obstacles, but in unobstructed waters, a preference for darkness is seen (Banks, 1969).

The design of a pool:weir fish ladder takes advantage of the natural leaping ability of salmonids. Stuart (1962) investigated the principal stimuli involved in leaping behavior and concluded that this behavior can be directly correlated with hydraulic conditions at natural waterfalls. The specific conditions involve a free-flowing jet plunging into a lower pool, resulting in the formation of a standing wave just downstream from the point of impact. Fish consistently leapt from the crest of the standing wave.

For a given flow, the hydraulic conditions created at the base of the overfall are dependent upon the height of the drop, and the water depth and bed geometry of the lower pool. The height of the drop controls the amount of kinetic energy and momentum contained in the jet. The depth of the lower pool affects the location of the standing wave and velocity distribution in the pool. The bed geometry affects stability of the location of the standing wave and the streamlining of the flow downstream.

In Stuart's observations, the fish consistently jumped when the ratio of kinetic to potential (depth) energies was high in the area just ahead of the fish. Fish are seemingly able to sense the "high energy front" and attempt to leap over it instead of swimming through it. Thus, the presence of the "energy front" may serve as a releaser to the leaping activity. However, the methods used by the fish to detect the energy barrier are unknown.

The standing wave formed in the lower pool played a significant role in the leaping activity. Hydraulic conditions exist which may, in themselves, be providing a releasing stimulus. The standing wave contains a strong upward current. Stuart conducted a series of experiments where balls of various buoyancies were placed in the upstream pool. The balls were projected back upstream from the standing wave over the weir. This observation, in conjunction with the observation that all the fish initiated the leap from this area, led Stuart to conclude that the presence of such a wave was of definite importance. (Results as shown in Report 2 of this project indicate air content is of importance to the formation of some "standing waves" due to the rising bubble velocity.)

Another potential stimulus identified by Stuart was the impact caused by the jet striking the lower pool. Fish which were 15 to 20 feet from the point of such an impact could be stimulated to jump. Jumping activity could be started in a static pool by pouring water from a height to the surface of the pool. The relative size of the fish responding to the apparent impact stimulus varied with the amount of water striking the surface. The impact stimulus (increase in noise level and/or the local velocity past the fish) may serve to stimulate the fish to move forward in preparation for the leap.

A potential directing stimulus may be a visual perception of the environment. Stuart (1962) suggests that the fish may be able to perceive the contrast between light and shade and thereby visually locate obstruction crests by the contrast created between the sky and the barrier. The orientation serves not only to locate the obstruction, but also to indicate the height of the barrier. The suggestion of a visual, directing stimulus is supported by the facts that all leaping stopped at the onset of darkness and that fish were able to leap over a barrier placed just above the weir crest. (Sighting was observed during tests at Johns Creek hatchery ladder as discussed in Report 2 of this project.)

Other components which could function as directing stimuli are factors such as color and the presence of boundaries. Fish orient toward surfaces of lighter colors. The shadings of walls and floors of ladder chambers relative to incident light striking the water surface may affect their orientation within the ladder and ultimately their movement through and out of the ladder. Fish also exhibit a natural tendency to follow boundaries they encounter. Care must be taken in design so as to avoid leading edges that may direct fish into corners or other "dead ends."

Stresses

Mechanical Damage to Fish

Damage could result from sharp-edged structures within the passage structure and on the fishway opening itself as shown in the Denil fishway entrance in Fig. 7. Excessive turbulence within the chamber could magnify the problem.

Hyperactivity

This term refers not only to excessive undirected behavior, but also to excessive energy demands placed on the fish as it negotiates the fishway.

The end result of extreme hyperactivity is the death of the fish (Black, 1958). To avoid undirected behavior, fish should be stimulated to keep

moving through the structure. A balance must be struck between keeping the fish moving and allowing them enough rest so as not to become exhausted. Sufficient, but not stagnant, resting opportunities should be provided.

Delay

A delay of the normal migration schedule of a run of fish may have varying degrees of effects on the spawning success of these fish depending on how much "slack time' has been built evolutionarily into a particular run of fish. If they enter the river system at an advanced stage of gonadal maturation, even a small delay could result in spawning in unsuitable areas or death before spawning at all. Fish entering a system while they are still "bright" may be less affected by delay, depending on how far up the system they have to travel before reaching their spawning grounds, and how long they hold at the site before spawning. Nevertheless, delay is undesirable.

Delay could result from a number of factors. Two that are directly related to fish passage structure design are: (1) inadequate attraction flow--if fish are unable to find the entrance, they may remain below the pass for extended periods of time; (2) lack of correct flow conditions to keep fish moving through the pass. In this situation, fish would either remain in pools, or fall back, and possibly out of the passage structure.

Temperature

Salmonids, being cold-water species, are less tolerant of warmer temperatures. Higher temperatures increase oxygen demand as well as increase the rate of all other metabolic functions and concurrently reduce the oxygen-carrying capacity of the water. Temperature stress also facilitates disease spreading (Hunter et al., 1980). Temperature may also function as a barrier in a fishway. Water drawn from warmer upper levels of a reservoir would be in contrast to the receiving water at the entrance to the fishway and could serve as a barrier as the fish encounter the temperature differential.

Water Quality

Oxygen and carbon dioxide concentrations should not prove to be a major problem in a fishway due to the mixing of the water as it travels through the fishway. These components are more a function of the incoming water than of the fishway itself. By taking care in locating the source of water for the fishway so as not to draw excessively warm or stagnant water, problems could be avoided.

Crowding

Higher biomass of fish per unit volume of water increases the possibility of injury, disease, and stress due to hyperactivity. However, durinq peak spawning runs, avoidance of crowded conditions would be nearly impossible anywhere the natural upstream migration is interrupted by any type of barrier. The best approach would be to provide sufficient attraction flows to eliminate delay below the passage structure and prevent fish from "piling up. Also, correct flow conditions should be provided within the pass to keep the fish moving up and out of the structure. Conservative designs tend to encourage delays and allow nonselective fish passage.

Disease

Disease is more prevalent any time fish are crowded, stressed (due to any factor), physically damaged, and/or water quality is marginal. By optimizing correct conditions discussed above, the threat of disease can be lessened.

SALMONID PREFERENCE FOR HIGHER VELOCITIES DURIN6 UPSTREAM MIGRATION

Introduction

In studies of fish passage facilities, and during other field investigations, it has been observed that upstream migrating salmonids tend to choose the path with the highest velocity associated with the strongest flow filament (largest amount of mass flow). This is a very important consideration in the attraction of fish to the entrances of fish ladders. Even though this need has been realized and studied for many installations, fundamental physical relationships have not been developed between different velocities and the consistent choice of certain velocities by the fish.

In this section some principles of fluid mechanics have been applied to data reported in 1960 on the choice of the higher of two parallel attraction velocities by several species of salmonids (Collins and Elling, 1960). Their original analysis tested the results statistically. The new analysis, involving the momentum differences between two attraction flows, yields a physical basis for the design of attraction flows. The boundary solutions of the developed equations yield the upper limit of salmonid burst speed, and the lower limit is their most efficient sustained speed (about 2.3 fps, Brett, 1965).

Test Data

Data on the preference of chinook salmon *Oncorhynchus tshawytscha*, silver[1] salmon *O. kisutch* and steelhead trout *Salmo gairdneri* for the higher of two velocities in duplicate channels are presented in Table 21 from Collins and Elling (1960). A report by Weaver (1963) gives details of the test apparatus and conditions at the Fisheries-Engineering Research Laboratory at Bonneville Dam in Washington.

The statistical analysis of the data in Table 21 showed significance only for velocity ratios (V1/V2) of almost 5:1, 4:1, and 3:1. There were too few silver salmon to analyze statistically, but the test results are included. The data in Table 21 are average values for all tests, and replicate tests were run alternating the higher and lower velocities in both channels.

Testing was conducted on upstream migrating fish to observe their preference for higher velocities. The results of high velocity tests (6-8 fps) indicate that while both steelhead and the chinook sought higher velocities, the steelhead had greater stamina. During the highest velocity tests, 90 percent of the chinook chose the higher velocity channel, but only

---

I Popular name for coho used by Collins and Elling (1960).

26 of 51 (about 50 percent) traversed the 85-foot channel. Although only 75 percent of the steelhead chose the higher velocity channel, 29 of the 31 (94 percent) successfully neqotiated its full length.

Table 21. Velocity Combinations and Data Reduction for Analyzing the Selection of the Higher Velocity Channel by Silver and Chinook Salmon and Steelhead Trout (from Collins and Elling, 1960).

Test Condition		Average Percent of Fish Choosing Higher Velocity in All Tests		
V1 (fps)	V2 (fps)	Silver (%)	Chinook (%)	Steelhead (%)
8.0	2.0	83	93	79
8.0	4.0	86	68	59
8.0	6.0	46	45	52
6.0	2.0	83	87	73
6.0	4.0	68	62	64
4.0	2.0	100	73	67
Special Test:				
12.9	2.7	--	90	76

Methods of Analysis

To expand the analysis of the data from Collins and Elling (1960), and to develop some parametric relationships, several combinations of velocity multiples, ratios, and differences were analyzed. It is important to consider the velocity squared term, because it is indicative of both the drag and momentum forces, on the fish and in the flow as discussed in the section on locomotion and hydrodynamics.

Analysis to Include Chance

After examining the various combinations of velocity terms in the two channels, it was decided that the differences in momentum between the two channels and their average momentum should be set as boundary conditions on the analysis as summarized in Table 22.

Table 22. Data reduction and velocity combinations for analyzing the selection of t
channel by silver and chinook salmon and steelhead trout using the mo
between two attraction flows and their average momentum--a fish attractio

Test Conditions		Percent of Choosing Higher Velocity			VELOCITY COMB			
							Momentum Difference	Average Momentum
V1 (f/s)	V2 (f/s)	Silver* (%)	Chinook (%)	Steelhead (%)	$V1^2$	$V2^2$	$(V1^2-V2^2)$	$[\frac{1}{2}(V1+V2)$
8.0	2.0	83	93	79	64.0	4.0	60.0	25.0
8.0	4.0	86	68	59	64.0	16.0	48.0	36.0
8.0	6.0	46	45	52	64.0	36.0	28.0	49.0
6.0	2.0	83	87	73	36.0	4.0	32.0	16.0
6.0	4.0	68	62	64	36.0	16.0	20.0	25.0
4.0	2.0	100	73	67	16.0	4.0	12.0	9.0
Special Tests:								
12.9	2.7	--	90	76	166.2	7.2	159.0	60.7

*Name used by Collins and Elling (1961) for coho.

The choice between two velocities must be based on the relative level of what is being sensed by the fish dnear the channel or fishway entrance. More importantly, the difference in momentum forces ($\Delta\rho QV$) is the dominant term, where: ρ is density, Q is flow, and V is mean velocity. Because flow is area times velocity, the momentum in the jets is represented by the velocities squared, and a fish attraction factor can be defined by

$$FAF = \frac{V1^2 - V2^2}{[1/2(V1 + V2)]^2}$$

where the numerator represents the difference in attraction momentum and the denominator represents the average (level of) momentum in the two jets. This could be considered to be an indicator of the attractiveness of one jet divided by the level of attractiveness in both jets.

If one plots these results as shown in Fig.45 they can be related to the statistical analysis which was conducted by the researchers at the Bonneville Laboratory. This is shown by noting that when the percent of fish choosing the higher velocity is 50 percent, this is a chance situation with no real choice being available. The fact that some samples fall below 50 percent demonstrates that at lower values of the "fish attraction factor" (FAF) there is more randomness in the choice. It should be noted again that the coho samples were very small (five fish), and this accounts for the large amount of scatter in their data points.

Some physical boundaries can be put on the graphs in Fig. 45 and the extreme values of V1 and V2. For example, the maximum burst speed for steelhead is about 28 fps or 8.8 m/s. If V1 is the maximum fish speed and V2 is equal to zero (pool condition) then the maximum FAF (X-scale) is 4.0. If one considers the lower limit (of V2) as being the most efficient velocity for energy expenditure (about 2.3 fps) then the FAF term is about 3.4 (using V1 = 28.0 fps). This is probably about the actual maximum conditions that could be achieved by steelhead and Atlantic salmon as shown by the long-dashed line in Fig. 45 leading up to 100 percent of FAF = 3.4. An FAF = 2.8 is the best value for chinook to guarantee maximum attraction. Other, less dynamic species would have their graphical relationships to the left of those shown for chinook and steelhead, and lower limits on their FAF values.

Although the upper limits of the "fish attraction factors" were shown to coincide with the maximum burst speed and most efficient minimum speed, the same high level of FAF can be achieved with other velocity combinations. For example, a FAF = 2.7 can be achieved with V1 and V2 combinations of 22 and 4, 15 and 3, and 10 and 2, respectively. The same analysis can be done for lower FAF values, but with less probability of success and more random choices by the fish as shown in Fig. 45. The attraction flow velocity should, of course, be less than the maximum burst speed of the species in question.

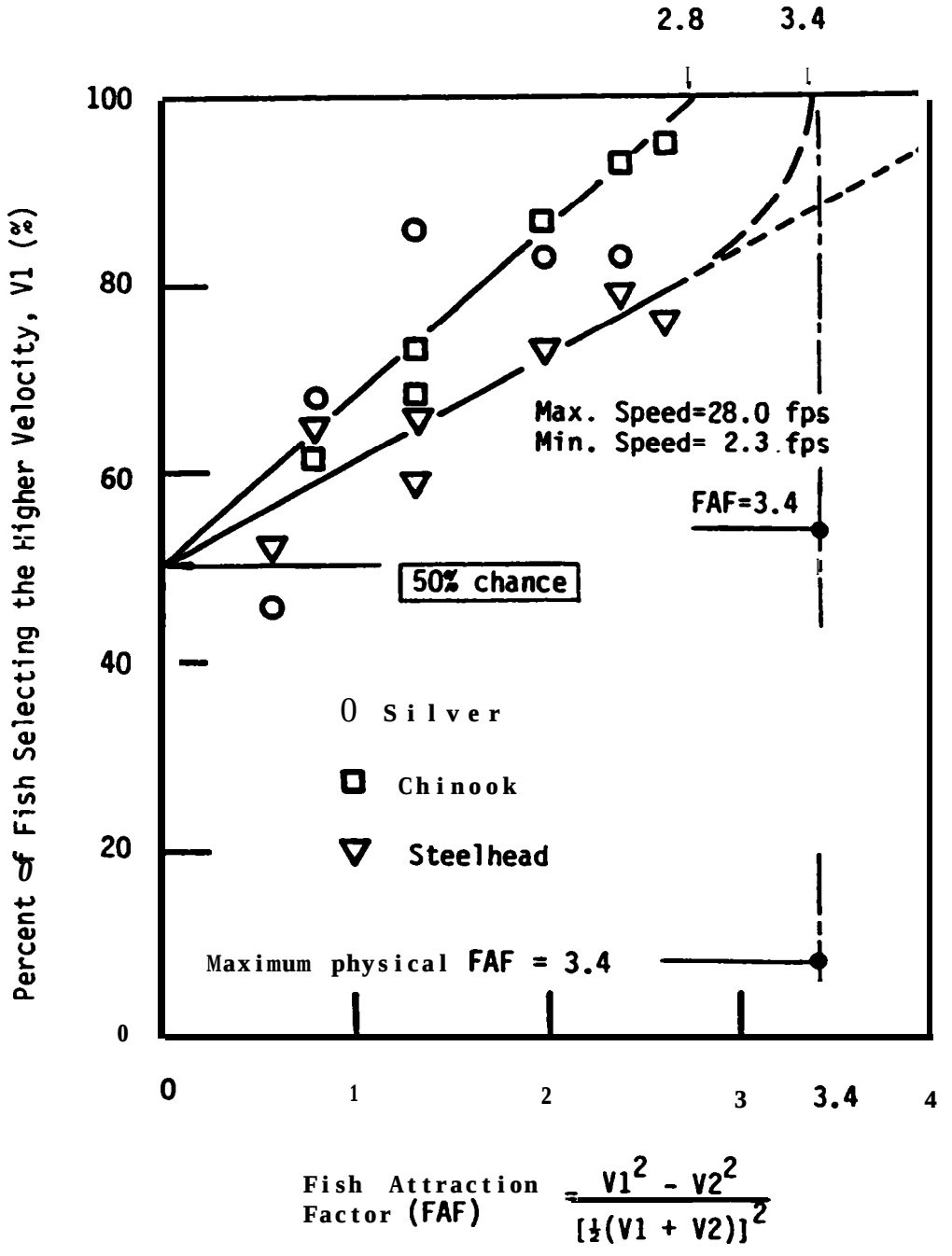

Figure 45. Choice of higher velocities by upstream migrating salmon and steelhead related to momentum level in the attraction flows as defined by the momentum difference divided by the average momentum in the two jets.

Summary

The "fish attraction factor" makes it possible to design attraction flows for fishway entrances by knowing only the ambient velocity conditions (V_2) and the design species.

This physical-mathematical analysis of the selection of higher velocities has demonstrated boundary conditions governed by momentum, velocity differences, fish burst speed and minimum energy expenditure. Similar conditions can be established for other species based on their capabilities so that more effective attraction flows can be designed. The application of this type of physical analysis, which matches fluid dynamic principles to fish locomotion, has application to other problems where design criteria are lacking, such as the analysis of velocity and elevation barriers to upstream migration, including culverts and waterfalls as discussed in Part 4 of this project report (Powers and Orsborn, 1985).

Other factors regarding the attraction of fish have been presented previously in the chapter on fishway classification.

DESIGN SURVEY AND INTERVIEWS

Two different surveys were conducted to obtain information about current fishway design practice:

(1) A questionnaire was mailed internationally to the organizations in Table 23; (NOTE: TABLES 23-27 BEGIN ON PAGE 110); and

(2) Personal interviews were held with fishway designers in British Columbia, Washington, and Oregon.

A copy of the mailed questionnaire is shown in Table 24. The questions used to initiate discussion during the personal interviews are listed in Table 25. As a result of both the survey and the interviews we noticed that certain design information, based on documentation of both successes and problems, does not appear to be widely distributed or in common use. Applications of certain designs to certain species seem to be limited to a country or a region. This "provincial" characteristic was noticed as a result of the numerous comments and questions raised by respondents to the International Survey (Table 24). Three of the questions (3, 5, and 6) were addressed most enthusiastically by the respondents. Their answers to questions 5 and 6 about fishway designs and operation, and question 3 on references, are summarized in Table 26 in that order because of their content.

Our survey and interview questions, plus those raised by respondents, have been categorized, paraphrased and summarized in Table 27. They are included as an overview of the types of questions which must be answered correctly (within certain operational limits) when designing any fishway for particular species. During our personal interviews, the responses to the commnon questions were very similar to those we received from the international survey.

But, during the interviews we asked several other questions regarding fishway design which were not included in the international survey.

We have taken the following questions from Table 25 for further discussion:

7. How do you design for attraction velocity?

9. Have you made observations of fish passage at fishways? Formal or informal? Documented?

11. Please discuss your general design philosophy regarding fishways.

Attraction Velocity

The need for attraction flow at the entrance to a fishway, its amount, orientation and its relationship to ambient flow conditions are all functions of the particular site in question and its flow geometry during the upstream migration season. The state-of-the-art in attraction flow is based primarily on experience, but Bell (1984) gives a few criteria (also referred to by respondents):

(1) Attraction velocities should be 4-8 fps, and preferably in the range of 8 fps, which agrees with the results of the tests by Collins and Elling (1960); and

(2) Cross velocities should not exceed 2 fps.

If one considers the cross velocity of 2 fps to be competing velocity almost parallel to the attraction velocity of 8 fps, the "Fish Attraction Factor* from Fig. 45 in the previous section would be

$$FAF = \frac{V1^2 - V2^2}{[1/2\ (V1 + V2)\ ]^2} = 2.4$$

This would mean that about 90-95% of the chinook would be attracted to the 8 fps flow, but only 75-80% of the steelhead, assuming velocity was the only factor affecting their choice.

If fish are being attracted to a fishway from a quiet pool, the ambient velocity is zero and there is no competition for the attractiveness of the fishway attraction flow (QAT in Fig. 1). As ambient flow becomes stronger (such as from a waterfall, spillway or powerhouse) then the relative strength (momentum = discharge times velocity) of the attraction flow becomes more important. The angle of intersection is extremely important as well as the relative locations of the competing flows. Attraction flows which enter a stronger strean at 90 are sheared off, and lose their attractiveness. Fish can only find the fishway entrance by following the boundary until they sense the attraction flow and turn directly into it.

Some persons interviewed felt that along a parallel boundary, such as a stream bank, it is important to have a 90-degree offset from which the attraction flow (QAT) can be issued parallel to the ambient flow of the stream (QS-QAT) parallel to the main stream and the bank. The offset cannot be wide enough to cause a large eddy in the ambient flow which can sever, dissipate and/or trap the attraction flow.

One of the main features of attraction flow mentioned in the interviews was the necessity to counteract false attraction flow. This would be the case both in the eddy example mentioned above, and in upwelling in fishladder

chambers. Fish are erroneously stimulated to jump by flows which circulate along the floor, and then up the side walls and in the corners. Baffling and diagonal filling of the corners reduces these false attractions. During our interviews we cane across some unique attraction systems which included: (1) barrier fences and fire hoses; (2) a siphon hose to move impounded juveniles upstream; and of course, (3) chemical signature homing to hatcheries which does not require velocity for attraction.

Observations of Fish Passage

We asked this question to ascertain whether or not there was a body of information on fish passage through fishways, other than the information developed during:

(1) Formal tests such as those conducted at the Corps of Engineers Fisheries Engineering Laboratory at Bonneville; and

(2) Fish counts as conducted at most mainstem dams on the Columbia River system dams which have upstream passage facilities.

We were seeking information which might lead to the development of a better way to evaluate fish passage efficiency in terms of its efficiency in energy expenditure, as well as documentation on observed actions and reactions by various species. Some of the persons interviewed have observed passage in fishways and offered these comments:

(1) There is not much well-documented information readily available on fish passage through fishways or over waterfalls;

(2) If given their choice, most species prefer to swim through low level ports as opposed to leaping over a weir (ostensibly to avoid exposure);

(3) Many observation reports have not been formalized, but are residing in agency files;

(4) It is "almost impossible" to get chum salmon to jump;

(5) If a weir drop is nine inches or less, chums will swim through the nappe;

(6) German brown trout in New England were successfully clearing a vertical jump of 28 inches; and

(7) No formal tests have been conducted on pinks and chums to determine their swimming and passage capabilities.

It appears that there is a definite need for a more thorough analysis of "passage efficiency" through various types of fishways. The energy expenditure of fish using different modes of upstream migration was developed in a previous section of this report and summarized in Table 19. Also, in Part 2 of this project report, a probability analysis of energy expenditure based on successful and unsuccessful passage attempts at weirs of various heights was presented. This type of statistical energy analysis holds promise for a better method of evaluating fishway efficiency.

Design Philosophies

Most of the persons interviewed responded to question number 11 with a statement that usually followed this (average) line of reasoning: "Although each system is unique, there are certain criteria which can be applied, but only after careful planning." This may, at first glance, appear to be non-commital, generic or ultraconservative, but it reflects both the true state-of-the-art for fishway design, and the judgment with which it should be applied.

Although many natural passage sites have similar geometric and hydraulic characteristics, a uniqueness may exist in the combinations of species, the timing of their runs, and/or the hydrologic characteristics of the site to which the fish have become biologically attuned. Two points which were emphasized throughout the interviews were to "keep it simple" and *it is better to err on the conservative side."

Some other aspects of design philosophy regarding fishways are:

(1) Use successful precedents as guides for new structures;

(2) Analyze each site for species, size, timing of runs, streamflow, site geometry, blending of flows and the existing attraction flow(s);

(3) Study the combination of factors during high water which adversely affects movement, and design for the worst combination of factors;

(4) Passage conditions at many sites are most strongly influenced by fluctuations in water levels (variations in the drop in water surface across the barrier and through the ladder) as a function of streanflow;

(5) Field observations of the existing species should be made prior to design;

(6) If all you do (in providing fish passage) is mitigate the known affects of a structure, then you (and the fish) lose; and

(7) We should be working to better understand, and improve on, nature's narrow passage "windows."

Table 23. List of Addresses for Fishway Design Questionnaire

United States of America

Atlantic Sea Run Salmon Commission
University of Maine
Orono, Maine

Mr. Don Clark
24370 SE Strawberry Drive
Boring, OR 97009

Mr. Mike Dell
Grant County PUD
PO Box 878
Ephrata, WA 98823

Mr. Carlos M. Fetterolf, Jr.
Great Lakes Fisheries Commission
1451 Green Road
Ann Arbor, MI 48105

Mr. Jack Fisher
425 G Street, Suite 770
Anchorage, AK 99501

Mr. Johanness Larson
Alden Research Laboratories
Worcester Polytechnic Institute
Holden, MA 01520

Maine Atlantic Salmon Federation
36 Pitt Street
Portland, Maine

Mr. Ole Matisen
Fisheries Research Institute
University of Washington
Seattle, WA 98195

Mr. Dick Nadeau
U.S. Fish and Wildlife Service
SRA-134-D
Anchorage, AK 99507

Mr. Ben Rizzo
U.S. Fish and Wildlife Service
One Gateway Center
Newton Corner, MA 01258

Mr. Ted P. Vande Sande
Department of Fish and Game
1416 9th Street

Australia

Department of Fish and Game
Melbourne, Victoria

Department of Fish and Game
Sydney, New South Wales

Scotland

Nature Conservancy
12 Hope Terrace
Edinburgh

Table 23. (Continued)

Canada

Atlantic Salmon Association
Shell Tower
1255 University Street
Montreal, Quebec

International Atlantic Salmon Foundation
PO Box 346
Gaspe, Quebec

Mr. James Walker and
Mr. G. D. Taylor
Fish and Wildlife Branch
Ministry of Environment
Parliament Buildings
Victoria, B.C.

Ireland

Ministry of Agriculture
Small Farms and Fisheries Division
2-4 Queen Street
Belfast

Mr. D. O'Leary
Electricity Supply Board of Ireland
Stephen's Court, St. Stephen's Green
Dublin 2

Department of Lands
Fisheries Division
3 Cathal Brugha Street
Dublin 1

Japan

River and Lake Division
Freshwater Fisheries Research Lab
Hino-shi, Tokyo

Norway

Freshwater Fisheries Research Department
Inspektoren for ferskvannsfisket
Vollebek

Sweden

Fishery Board of Sweden
Institute of Freshwater Research
Drottningholm

Salmon Research Institute
Alvkarleo

Table 24. Fish Ladder Questionnaire for International Survey

Project Title: Development of New Concepts in Fish Ladder Design

Albrook Hydraulics Laboratory
Washington State University
Pullman, WA 99164-3001 USA

1. Have you or your organization worked on the design or performance of fishways? Yes___ No___

2. What types?
Slot___ Weir___ Weir and Port___ Denil___ Steeppass___ Other type_____

3. What references did you use for your designs? (use back if needed)

4. Do you have project design reports, operation records, or other notes on file? Yes___ No___. Please send a few examples of these documents.

For these few examples:

5. If you were to build these ladders today, would you use the same designs? Yes___ No___. What modifications would you like to make?

6. For what species were these ladders built?

7. How well did the species use these ladders?

8. Do you have records or notes on performance evaluation? Yes___ No___. If you do, please send some examples. We are particularly interested in design modifications that were made after the ladder was in operation.

9. Have you documented (e.g., photos or measurements) the leaping abilities of salmon or trout? Yes No___. We would appreciate being able to borrow these photos/notes.

Name_____ Date_____

Address_____ Phone_____

_____

Thank you for your cooperation.
Jack Orsborn and Walter Mih

Table 25. Discussion Topics for Personal Interviews* During The Period of June, 1982-September, 1984

1. Agency of firm.

2. Person(s) interviewed, discipline and experience

3. Types of fishway activity:
   a. Design
   b. Operation
   c. Review
   d. Research
   e. All (a-d)
   f. Other

4. Which major references do you use?

5. What is the relative size of fishways with which you deal?
   a. Large
   b. Medium
   c. Small
   d. All

6. With which types of fishways do you have the most experience?
   a. Weir and pool
   b. Orifice and pool
   c. Weir, orifice and pool
   d. Slotted
   e. Denil or Alaska Steeppass
   f. Other

7. How do you design for attraction velocity?

8. What data sources do you use for fish speeds, and swimming and leaping capabilities?

9. Have you made observations of fish passage at fishways? Formal or informal? Documented?

10. Have you observed passage at natural barriers?

11. Please discuss your general design philosophy regarding fishways.

12. Can you provide examples of design, research or evaluation reports?

13. What are some names, addresses and phone numbers of several other persons who are working on fishways?

14. Do you have an inventory of your existing fishways?

* Persons interviewed are listed in the Acknowledgments.

Table 26. Summary of Responses to Questions 5, 6, and 3 of the International Survey (Table 24)

QUESTION 5. IF YOU WERE TO BUILD A FISH LADDER TODAY, WOULD YOU USE THE SAME DESIGN AS THE OLDER LADDER? IF NOT, WHAT MODIFICATIONS WOULD YOU LIKE TO MANE?

Australia (weir type): We are still experimenting with ladder design. Different designs are applicable to the unique character of certain locations.

Halifax, Nova Scotia: We build about ten new fishways yearly--mostly pool and weir types with two-foot drops.

Sweden: We usually have to change the entrance to the ladders.

Ireland (Department of Fisheries and Forestry) (Borland Fish Lock): We would not use (a lock) unless some modifications could be made to overcome the closed period of operation.

USF&WS (Massachusetts): In most cases we would use the same designs. However, in many cases where American Shad are a target species, we would construct fish elevators.

Marine Atlantic Sea Run Salmon Commission (MASSC) (Maine): We no longer recommend the Denil-type, and strictly prefer the vertical-slot type now.

Grant County PUD (Ephrata, WA): The size of the facilities are over-sizes for the numbers of fish passing upstream. The 1:lO foot on 10-foot slope at Wanapum is an improvement over Priest Rapids design of 1:16 slope. We probably should have vertical-slot weirs to pass all anadromous fish species including shad in the upper control structures at each dam.

Ireland (Electricity Supply Board): We would use the Borland Fish Lock in all dam over 20-feet high. The inlet should be located in a still water area away from the draught tube outlets. There the small flow from the fishpass is easily detected by the salmon.

Scotland: We have both underwater orifices and overfall salmon ladders. Notches in overfall ladders should be trapezoidal with sides at about 60 degrees and a downward curving base. This design concentrates the flow towards the center and directs the fish up the middle of the overfall. Head differences in this type are 1 foot to 2 feet 6 inches, and the flow should not exceed 5 to 6 cfs. (See Question 6, Scotland.)

Table 26. (Continued)

CONCLUSION: It appears that most designers in North America prefer the vertical-slot baffle fishway to pass all anadromous fish species including shad. In Europe, the use of fish locks is still in question where large runs of fish exist.

QUESTION 6. FOR WHAT SPECIES WERE YOUR LADDERS BUILT AND HOW WELL DID THE SPECIES USE THE LADDERS ?

Halifax, Nova Scotia: Atlantic Salmon and trout use pool and weir type the best.

USF&WS (Massachusetts): Atlantic Salmon, coho, chinook, trout, shad--in general efficiencies are adequate, but in some cases poor efficiencies were obtained with fish not *imprinted" above a specific barrier. There was mortality of American shad due to fallback in vertical-slot fishways (without sills).

MASSC (Maine): Large Atlantic Salmon did not use Denil-type fishway. Also, Denil fishway was prone to a lot of maintenance and repairs and did not operate well under our extremely fluctuating water levels.

Scotland: Atlantic Salmon use the weir-type ladders very well. Fish do not leap up a well-designed overfall weir but swim up and do this so quickly they are difficult to observe. (See Scotland answer for Question 5 above regarding shape of weir up which the salmon swim. See also section of report on Fishway Classification, Fig. 23.)

Grant County PUD (Ephrata, WA): Salmonids, quite well; shad are unable to pass through submerged orifice control structures at the upper end of fish ladders. A Denil is used for fish trapping and may hold up fish. Shad will not pass through a Denil fishway.

Ireland (Electricity Supply Board): Under proper conditions, all Atlantic salmon arriving at the Boreland fish lock passed.

CONCLUSION: Denil fishway is limited to use by smaller salmon. Shad will not pass a Denil fishway or use a submerged orifice fishway; they prefer weir or slot, but have difficulty avoiding fallback at night. Atlantic salmon use the pool and weir-type best.

Table 26. (Continued)

QUESTION 3. WHAT REFERENCES DID YOU USE FOR YOUR DESIGN?

Halifax, Nova Scotia: Those developed in the Atlantic Region for east coast fish species.

USF&WS (Massachusetts): Clay, C.H.; "Design of Fishways and Other Fish Facilities.* Various Corps of Engineers and NMFS publications.

Massachusetts (Alden Research Lab): Bell, Milo, "Fisheries Handbook"; and Ben, Rizzo, "Fish Passage Facilities Design Parameters for Connecticut River Dams."

MASSC (Maine): "Fishways in Maine,* Maine Department of F&W, 1967; Clay, C.H., "Design of Fishways and Other Fish Facilities," Ottawa, Canada.

Grant County PUD (Ephrata, WA): Federal and state fishery agency publications.

Ireland (ESB): Glenfield & Kennedy of Kilmarnock (Scotland) and ESB references.

Table 27. Composite of Fishway Design Questions Resulting From Interviews and Survey Responses

---

Introductory Interview Questions

1. With what types of fishways have you worked? (e.g., weir, slot, orifice, Denil, ASP, culverts, fish lifts, others, or combinations)?

2. What references did you use for design?

3. If you installed fishways today, what types would you prefer by species?

4. Do you have records or notes on performance of fishways?

5. Have you photographs or measurements of the leaping abilities of salmon or trout?

6. What are the most common reasons for fishway failure by type?

Hydraulics of Fishways

1. What design criteria are used for fishway attraction flows (e.g., velocities, flow, depths, orientation to stream)?

2. What is the percent of flow through the fishway compared to the river?

3. What criteria do you use to size the ladders?

Fish Leaping

1. What stimulates fish to jump?

2. When fish jump at natural falls, are they stimulated to jump or are they jumping as a last resort?

3. Under what kind of water conditions do fish most often jump?

4. Where do fish jump in relation to an overfall weir?

5. What species of fish swim through waterfalls as compared to jumping?

6. How accurate are fish in jumping, and what factors affect their accuracy?

7. By observations, how high can fish jump?

Table 27. (Continued)

Weir Fishways

1. What weir shapes were used in your fish ladder?

2. Have you observed standing wave heights with different weir shapes?

3. What kind of opening passed the fish most successfully (both in natural and man-made conditions)?

4. How well have different weirs worked over a range of flows?

5. How does the momentum over the weir compare to the momentun through a port as far as stimulating the fish to move?

Fish Movement Through Fishways

1. How long do fish "reside" in fishways, by species?

2. Are there any characteristics that 'hurry* fish through the fishway?

3. How do "delayed movement" and "fast movement" vary with differing flows?

4. What design features minimize physical damage to the fish as they move through the ladder?

5. Please comment on undersizing or oversizing of fish ladders.

6. How does fishway slope effect the rate of passage?

7. Have you worked with covering the parts of the fish pass that have shallow depths (e.g., to eliminate fright response)?

Denil or Alaska Steeppass (ASP)

1. How does the Denil fishway compare to a (weir or slot fishway) in terms of maintenance and operation during fluctuating water levels?

2. How well do large fish (salmon and steelhead) use the Denil or ASP fishway?

3. What type of exit and entrance conditions have you seen on a Denil or ASP fishway (geometry, attraction, location to toe of barrier, inside or outside of a bend, etc.)? How well did they work?

Table 27. (Continued)

Slot Type Fishways

1. How good are the resting conditions in a vertical-slot fishway chamber?

2. Do fish fall back through vertical slot fishways at night? If yes, under what conditions?

3. Have you worked with the Aeroceanics circular fishway for passing smaller fish (e.g., kokanee, trout, etc.)?

Fish Characteristics

1. What stimulates fish to move through a fishway?

2. Do fish have an aversion to surroundings outside their usual habitat?

3. What type of fishway entrance condition should be used to simulate a natural condition?

4. What vertical height do you consider to be an upstream migration?

5. Do fish stop migrating at night?

6. What water conditions do fish tend to avoid?

Fish Lifts or Elevators

1. How well do they work compared with the height to be lifted?

2. What do fish do during closed periods of operation of a fish lift?

Orifice Fishways

1. What experience have you had with shad passing through submerged orifice fishways?

2. In Europe, why is the weir type fishway preferred over the orifice type, unlike North America?

SOME CDNSTRUCTION CONSIDERATIONS

All during this project the importance of using practical construction methods for the fabrication of any new fishway design was foremost in our thinking. For example, when prototype tests were run at the John's Creek hatchery near Shelton our weirs, baffles, chutes and stop logs were all prefabricated in Pullman to fit the stop log slots in the John's Creek fishway. The stop logs were prefabricated to various depths to allow a large variety of ladder step heights within the limitations of the fishway channel slope and depth. Carrying these steps further into the applied construction field (and assuming adequate foundations), we discussed with designers and fabricators various such options as:

(1) Cutting large (8-foot diameter) fiberglass or corrugated metal pipes horizontally to form fishladder units; the weir plates at the ends of the sections would be designed to connect two units at a fixed drop in elevation;

(2) Using sandwich materials (fiberglass layers over plywood) to prefabricate tanks, weirs and baffles as a unit with external flanges to set the drop in elevation between tanks; and

(3) Prefabrication of units of concrete, steel, aluminum, or fiberglass similar to those in option (2), depending on the particular site environment and project objectives.

Wherever excavation through rock would be required, the unitized construction would have a definite advantage over concrete in that the rock would not have to be over-excavated for concrete forms. Also, repair and maintenance could be done quite simply with fiberglass patching, welding, or replacement of the damaged unit(s).

We did not go into detailed cost comparisons, but assuming common costs for site preparation, and assuming adequate foundations, the use of prefabricated units most certainly would be less expensive than concrete, especially in remote areas with off-channel fishways. Considering initial and maintenance operating costs, and special construction requirements, concrete will be the best material to use in certain environments, components and site conditions. But, as in the case of conservative biological design of fishways, there is ample room for creativity in the structural design of fishways.

Some designers and fabricators are already applying these concepts, such as for the adjustable, precast concrete, V-shaped fishway at the Lake Oahe chinook, coho and trout hatchery in South Dakota (Donahue, 1983). The precast concrete fishladder sections are installed seasonally from the hatchery into the reservoir on a gently sloping beach until they reach the water level.

Truncated, triangular weir Plates are placed apex down into slots in the concrete units to provide any desired drop or pool condition depending on the species using the ladder. The ladder had to be built in sections so that it can be extended or shortened to reach the variable water levels of Oahe Reservoir.

A fishladder, built of corrugated metal Binwall, was installed a few years ago at a hydroelectric installation in New Foundland (Penny, 1982). The Binwall formed the rectangular perimeter of the fish ladder units with fill outside. The interior baffle walls and weirs were constructed of marine plywood and supported with steel angles.

Modular fishway construction is discussed with regard to the new WSU weir-pool-baffle fishladder at the back of Appendix II to this report. The weir, pool and baffle design principles of this new fishway (see Fig. 9, and in Appendix II, Fig. 18) were applied in a new fishladder on Rogers Creek in the Chehalis River basin in the Sumner of 1985 (Powers, 1985)*. This project is part of the Washington State Department of Fisheries salmon enhancement program. The drop between pools at low flows (a few cfs) was designed for 2.5 ft. with a plunge pool depth of 3.0 ft. The general site conditions are shown in Fig. 46.

As shown in Figs. 47 through 49, a shorter version of the baffle guide walls was used than is shown in Fig. 9. Also, the baffles were made of standard perforated plate with small (two-inch) holes, so that fish would not be gill netted as occurred during the John's Creek preliminary tests. Wild stock coho have been observed passing through the ladder on Rogers Creek by leaping during low to average fishway flows. At the highest observed fishway flow (20 cfs), the differential is slightly reduced, the weir jet strikes the pool at a flatter angle, and the fish swim up the jet.

Based on the commonly used energy-volume relationship of 4 $ft\text{-}lb/sec/ft^3$ of fishway chamber, at 20 cfs the tank volume would have to be

$$20\ ft^3/sec\ (62.4\ lb/ft^3)\ (2.5\ ft)/4 = 780\ ft^3$$

But, the tank volume is

$$10\ ft\ (L) \times 3\ ft\ (D) \times 6\ ft\ (W) = 180\ ft^3$$

One chamber of the fishway is only eight feet long and dissipates the energy as adequately as the ten-foot chambers. The actual design volume of the new fishway is only about 20% of the size which would have been required using 4 $ft\text{-}lb/sec/ft^3$ of tank as the design criterion. This has been accomplished by the use of a weir which concentrates the flow, the overflow weirs upstream of the baffles, and the energy dissipation by the baffles.

---

* Personal communication.

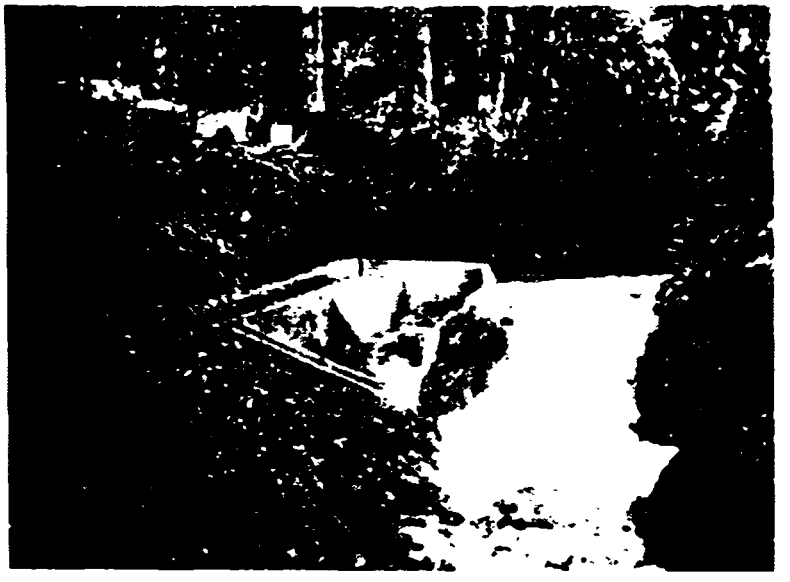

Figure 46. View of Rogers Creek fishway and falls.

Figure 47. Turning chamber near entrance to Rogers Creek fishway at high flow.

Figs. 46-49 by Patrick D. Powers

Figure 48. Rogers Creek weir:baffle: pool fishway operating at a flow of a few cubic feet per second. (WDOF)

Figure 49. Rogers Creek weir:ba pool fishway operating at an i mediate flow of about six to s cubic feet per second.

The new fishway cost about $60,000 with a pool drop (ladder step) of 2.5 feet and a falls height of 14 feet. Standard design practice calls for 1.0 foot of pool drop for stronger salmon and steelhead. Using this design criterion, and assuming all construction costs would scale up directly, a "standard" fishladder would have cost about $150,000.

Another less expensive, research pool and weir fishway has been constructed recently at the Toppenish irrigation diversion darn in the Yakima system. The fishway is designed to assist steelhead in their passage over the seven-foot high, free-overfall spillway at lower flows (75-300 cfs), when the dam has been impassable. Steelhead can pass over the dam at less frequent flows greater than about 300 cfs The new fishway is being constructed of gabion wire baskets filled with rock at a cost of about $30,000-40,000. A traditional slotted fishway at the same sight would have cost on the order of $140,000-160,000, based on a preliminary design estimate.

APPENDIX I.--BIBLIOGRAPHY

Aaserude, R.G., "New Concepts in Fishway Design," M.S. Thesis, Dept. Civil and Environmental Engineering, Washington State University, 1984 (Report Part 2 of 4, BPA Project 82-14 Report, 1985).

Aeroceanics Fish Corporation, "The Aeroceanics Fishway--A New Concept," Product Brochure, 1976.

Albertson, M.L., "Diffusion of Submerged Jets," Trans. of Am. Soc. of Civil Engineers, p. 115, 1950.

Alexander, R.M., "Functional Design of Fishes," London, Hutchinson, 1967.

American Society of Civil Engineers, "Design of Water Intake Structures for Fish Protection,* Task Committee on Fish Handling Capability of Intake Structures, 1982.

Anderson, D.J., "Air Entrainment and Velocity Profile Characteristics Upon Impact of a Free Fluid Jet into a Similar Fluid," M.S. Thesis, University of Minnesota, 1968.

Anderson, John W., "Vincent Creek Fish Pass," USDI, Bur. Land Mgt. Tech. Note 253, Coos Bay Dist., OR, 1974.

Anonymous, Excerpt from the Annual Reports of the Canadian Dept. of Marine and Fisheries, 1886, in Larkin, P.A., "Play it Again Sam--An Essay on Salmon Enhancement," J. Fish. Res. Bd. Can., 31(8):1433-1459, 1974.

Antonnikov, A.F., "Hydroelectric Construction and the Problem of Fish Passage Facilities," Trans. by Ale A. Mathisen from Hydroelectric Construction, No. 3, 26-29, Fisheries Res. Inst., Univ. of Wash., Circular No. 225, 1964.

Babb, A.F., W.C. Mih, and H.C. Aus, "Air-Entrainment Characteristics of Plunging Water Jets and Their Relationship with Nitrogen Supersaturation in Rivers," First Annual Report, OWRT Project W-14, 74-025C, R.L. Albrook Hydraulic Laboratory, Washington State University, Pullman, Washington, 1974.

Bainbridge, R., "An Apparatus for the Study of the Locomotion of Fishes," J. Exp. Biol. 35:109-113, 1958.

Bainbridge, R., "Speed and Stamina in Three Fish," J. Exp. Biol. 37:129-153, 1960.

Bainbridge. R., "Problems of Fish Locomotion," Sympos. Zool. Sac. London, 5:13-32, 1961.

Bainbridge. R., "Training, Speed and Stamina in Trout," J. Exp. Biol. 39:537-555, 1962.

Banks, J.W. 1969. "A Review of the Literature on the Upstream Migration of Adult Salmonids," 3. Fish Biol., 1:85-136, 1969.

Beamish, F.U.H., "Swinning Capacity," Chapter 2 in Vol. VII of Fish Physiology (eds. Hoar and Randall), Academic Press, New York, 1978, pp. 101-187.

Bell. Milo C., "Fisheries Handbook of Engineering Requirements and Biological Criteria," Fish. Engr. Res. Prog., Corps of Engrs., N. Pac. Div., Portland, OR, 1973 and 1984.

Biette, R.H. and Odell, R.M., *An Assessment of a Fish Pass Manufactured by Aeroceanics Fishway Corporation," Ontario Ministry of Natural Resources, circa 1975.

Black, Edgar C., "Hyperactivity as a Lethal Factor in Fish," J. Fish. Res. Bd. Canada, 15(4), 1958.

Blake, R.W. "Fish Locomotion," Cambridge University Press, Cambridge, 1983.

Bohne, Joseph R. and Lee Sochasky, "New England Atlantic Salmon Restoration Conference," Proceedings of the "New England Atlantic Salmon Restoration Conference,* Boston, Mass., January, 1975.

Breder, CA., Jr., "The Locomotion of Fishes," Zoologica, 4(15):159-297, 1926.

Brett, J.R., "Implications and Assessments of Environmental Stress," H.R. MacMillan Lectures in Fisheries: The Investigation of Fish-Power Problems: Symp. of April 29-30, 1957, Inst. of Fisheries, Univ. of British Columbia, Vancouver, 1958.

Brett. J-R., "The Energy Required for Swimming by Young Sockeye Salmon with a Comparison of the Drag Force on a Dead Fish," Trans. of the Royal Soc. of Can., 1, Series IV, 1963.

Brett, J.R., "The Respiratory Metabolism and Swimning Performance of Young Sockeye Salmon," 3. Fish. Res. Bd. Canada, 21(5):1183-1226, 1964.

Brett, J.R., "The Swimming Energetics of Salmon," Reprint 1019 from Scientific American 213(2):80-85, 1965.

Brett, J.R., "Energy Expenditure of Sockeye Salmon During Sustained Performance," 3. Fish. Res. Bd. Canada, 30(12), Pt. 1, 1973.

Brett, J.R., and Glass, N.R., "Metabolic Rates and Critical Swimming Speeds of Sockeye Salmon in Relation to Size and Temperature," J. Fish. Res. Bd. Canada, 30(3), 1973.

Brett, J.R., Holland, M., and Alderdice, D.F., "The Effect of Temperature on the Cruising Speed of Young Sockeye and Coho Salmon," J. Fish. Res. Bd. Canada, 15(4), 1958.

Calderwood, W.L., "Salmon and Sea Trout," Edward Arnold and Co., London, England, 1930.

Cederwall, K. and J.D. Ditmars, "Analysis of Air-Bubble Plumes," W.M. Keck Laboratory of Hydraulics and Water Resources, California Institute of Technology, Report No. KH-R-24, 1970.

Chow, V.T., "Open-Channel Hydraulics," McGraw-Hill Book Company, 1959.

Clausen, J.C. and Floodeen, E.R., "Hydraulic Model Test of Denil Deep Channel Fishway," Washington State Dept. of Fisheries, 1954.

Clay, C.H., "Design of Fishways and Other Facilities," Dept. of Fish. of Canada, Ottawa, 301 p., 1961.

Cobb, John N., "Preliminary Report of Fishway Work," College of Fisheries, University of Washington, Seattle, 1927.

Collins, Gerald B., "Proposed Research on Fishway Problems," Unpublished, submitted to the U.S. Army Corps of Engineers Fish and Wildl. Serv., 1951.

Collins, Gerald B. and Elling, Carl H., "Fishway Research at the Fisheries Engineering Research Laboratory," Bur. of Commerical Fisheries, Circular 98, 1960.

Collins, Gerald B. and Gauley, Joseph, "Ability of Salmonids to Ascend High Fishways," U.S. Bureau of Commercial Fisheries, Trans. of the American Fisheries Society, 91(1), 1962.

Collins, Gerald B., Elling, Carl H., Gauley, Joseph R., and Thompson, Clark S., "Effect of Fishway Slope on Performance and Biochemistry of Salmonids," U.S. Fish and Wildl. Serv. Fish. Bull. 63(1):221-253, Washington, D.C., 1963.

Conrad, V. and H. Jansen, "Refinements in Design of Fishways for Small Water Sheds," Gov't of Canada, Fisheries and Oceans, Fisheries Research Branch, Freshwater and Anadromous Division, Scotia Fundy Region, presented at Northeast Fish and Wildlife Conference, Dover, VT., May 15-18, 1983.

Coots, Mi 1 lard, "Some Notes on Biological Investigations of the Perforated Plate Fish Screen," Inland Fisheries Administrative Report No. 56-8, Calif. Dept. of Fish and Game, 1956.

Cramer, F.K. and Oligher, R.C., "Passing Fish Through Hydraulic Turbines," Trans. Amer. Fish. Soc., 93(3), July, 1964.

Daily, J.W. and Harleman, D., "Fluid Dynamics," Addison-Wesley Pub. Co., Inc., Reading, MA., 1966.

Dane, B.G., "A Review and Resolution of Fish Passage Problems at Culvert Sites in British Columbia," Fish. and Marine Service, Tech. Rpt. 810, 1978.

Dane, B.G., "Culvert Guidelines: Recommendations for the Design and Installation of Culverts in British Columbia to Avoid Conflict with Anadromous Fish," Fisheries & Marine Service Technical Report No. 811, October, 1978.

Davidson, F.A., "The Effect of a Succession of Dams on the Columbia River on the Upstream Movement of the Blueback Salmon Runs," Public Utility District of Grant County, Ephrata, WA, January, 1967.

Davis, G.E., Foster, J., Warren, C.E., and Doudoroff, P., "The Influence of Oxygen Concentration on the Swimming Performance of Juvenile Pacific Salmon at Various Temperatures," Trans. Am. Fish. Soc. 92(2):111-124, 1963.

Decker, Laurence F., "Fishways in Maine," Dept. of Inland Fisheries & Game, Pamphlet No. 5, 1956.

Deedler, C.L., "Modern Fish Passes in the Netherlands," "Progressive Fish-Culturalist," 151-154, October, 1958.

Denil, G., "La Genes d'une Echelle a Poissons Nouvelle," Bulletin Populaire de la Pisciculture et des Ameliorations de la Peche, Duenieme Annee, No. 9, Sept.-Oct., 1909.

Denil, G., "La Mechanique du Possion de Riviere," Chap. X., Les Capacites Mechaniques de la Truite et du Saumon, Ann. Trav., 38(3):411-433, Belquim, 1937.

Dimeo, Art, "Correcting Vertical Fish Barriers," ED&T 2613 USDA Forest Ser., Equip. Develop. Ctr., Missoula, MT, September, 1977.

Donahue, E.E., Pre-cast Concrete, V-Shaped, Extendable Fish Ladder for Chinook Salmon Hatchery on Lake Oahe, South Dakota, Personal Commuinication, 1983.

Douma, J.H., "Open Channel Flow at High Velocities," Trans. Amer. Soc. Civ. Engrs., No. 205, 1462-1473, 1943.

Driedzic, W.R. and Kiceniuk, J.W., "Blood Lactate Levels in Free-swimming Rainbow Trout (Salmo gairdneri) Before and After Strenuous Exercise Resulting in Fatigue," J. Fish. Res. Bd. Canada 33:173-176, 1976.

Dryden, R.L. and Stein, J.M., "Guidelines for the Protection of the Fish Resources of the Northwest Territories During Highway Construction and Operation." Dept. of the Environment, Fish and Marine Service, Tech. Rt. No. CEN/T-75-1, 1975.

Elling, Carl H., "Further Experiments in Fishway Capacity," United States Fish & Wildl. Serv., Special Scientific Report--Fisheries, No. 340, May 1960.

Elling, Carl H. and Raymond, Howard L., "Fishway Capacity Experiment," United States Fish and Wildl. Serv. Fisheries No. 299, May, 1959.

Ellis, Derek V., "Swimming Speeds of Sockeye and Coho Salmon on Spawning Migration," J. Fish. Res. Bd. Canada, 23(2), 1966.

Elson, P.F., "Effects of Current on the Movement of Speckled Trout," J. Fish. Res. Bd. Can. 4:491-499, 1939.

Engel, P., "Fish Passage Facilities for Culverts of the McKenzie Fishway," Dept. of the Environ., Hyd. Div., Canada Centre for Inland Waters, March, 1974.

Ervine, D.A. and E.M. Elsawy, "Effect of a Falling Nappe on River Aeration," 16th Congress of the International Association for Hydraulic Research, Brazil, Vol. 3, pp. 390-397, 1975.

Evans, W.A. and Johnston, B., "Fish Migration and Fish Passage--A Practical Guide to Solving Fish Passage Problems," USDA EM7100-12, Forest Service, June 1980.

Everhart, W.H. and W.D. Youngs, "Principles of Fishery Science," Cornell University Press, Ithaca, New York, 1981.

Falvey, H.T., "Air-Water Flow in Hydraulic Structures," U.S. Dept. of the Interior, Water and Power Resources Services, Water Resources Technical Publication, Engineering Monograph No. 41, 1981.

Fairbridge, R.W., "The Encyclopedia of Geomorphology," Encyclopedia of Earth Sciences Series, Vol. III, Waterfalls by D.C. Ford, Reinhold Book Corp., New York, pp. 1219-1220, 1968.

Feldmeth, Robert C., "An Estimate of Energy Expenditure by Rainbow Trout (Salmo gairdneri) in a Mountain Stream," J. Fish. Res. Bd. Canada,

"Fish Pass at Chester Weir, River Dee," Wallingford Hydraulics Research Station, Wallingford, England, Rpt. EX737, (No author) July 1976.

Fisher, Jack, "Fishway Design," State of Idaho, Fish & Game Dept. In-Service Training School, March 1964.

Fisher, K.C. and P.F. Elson, "The Selected Temperature of Atlantic Salmon and Speckled Trout, and the Effect of Temperature on the Response to an Electrical Stimulus," Physiol. Zool., 23:27-34., 1950.

Forrester, C.R., "A Note on the Practical Use of a Salmon Repellent," The Fisheries Research Board of Canadas Biological Station, Nanaimo, B.C., The Canadian Fish Culturist, Issue 30, pp. 61-62, 1954.

Fry, F.E.J., "The Effects of Environmental Factors on the Physiology of Fish," Chapter 1 in Vol. VI of Fish Physiology (Eds. Hoar and Randall, Ref. 43), Academic Press, pp. 1-98, 1971.

Fry, F.E.J. and Cox, E.T., "A Relation of Size to Swimming Speed in Rainbow Trout," J. Fish. Res. Bd. Canada 27(5):976-978, 1970.

Gauley, Joseph R., "Effect of Fishway Slope on Rate of Passage of Salmonids," USFWS, Bur. Comm. Fish. Spec. Sci. Rpt., Fisheries No. 350, 23 p., 1960.

Gauley, J.R. and Thompson, C.S., "Further Studies on Fishway Slope and Its Effect on the Rate of Passage of Salmonids,"USFWS, Bur. Comm. Fish. Bull. 63(1):45-62, 1963

Gero, D.R., "The Hydrodynamic Aspects of Fish Propulsion," Amer. Mus. Novit. 1601, 32 p, 1952.

Glova, G.J. and McInerney, J.E., "Critical Swimming Speeds of Coho Salmon (Oncorhynchus kisutch) Fry to Smolt Stages in Relation to Salinity and Temperature,* J. Fish. Res. Bd. Canada, 34:151-154, 1977.

Graham, J.M., "Some Effects of Temperature and Oxygen Pressure on Metabolism and Activity of Speckled Trout (S. fontinalis)," Can. J. Res. 27:270-288, 1949.

Grahame, A., "Over the Top" (Dead salmon rivers revive when Percy Nobbs works magic), Outdoor Life, May, 1953.

Gray, Sir James, "How Fish Swim," Sci. Am. 197(2):48-54, 1957.

Gray, J., "Animal Locomotion," W.W. Norton and Co., Inc., New York, New York, 1968.

Greenland, Donald C. and Thomas, Allan F., "Swimming Speed of Fall Chinook Salmon Fry," Trans. Amer. Fish. Soc., No. 4, 1972.

Griffiths, J.S. and Alerdice, D.F., "Effects of Acclimation and Acute Temperature Experience on the Swimming Speed of Juvenile Coho Salmon," J. Fish. Res. Bd. Canada 29:251-264, 1972.

Haberman, W.L. and R.K. Morton, "An Experimental Investigation of the Drag and Shape of Air Bubbles Rising in Various Liquids," David W. Taylor Model Basin, Report 802, 1953.

Hall, L.S., "Open Channel Flow at High Velocities," Trans. Amer. Soc. Civ. Engrs., No. 2205, 1393-1434, 1943.

Harvey, H.H., Hoard, U.S., and Bothern, C.R., "Sounding Response of the Kokanee and Sockeye Salmon", J. Fish. Res. Bd. Canada, 25(6):1115-1131, 1968.

Hasler, A.D., "Underwater Guideposts--Homing of Salmon," University of Wisconsin Press, Madison, 1966.

Hasler, Arthur D. and Larsen, James, "The Homing Salmon," Reprint 411 from Sci. Amer., 97(2):48-54, 5 p., 1955.

Hayes, F.R., "Artificial Freshets and Other Factors Controlling the Ascent and Population of Atlantic Salmon in the La Have River, Nova Scotia," Bull. Fish. Res. Bd. Can., 99:47pp., 1953.

Hilliard, D., "Weir Optimization: A New Concept in Fish Ladder Design," Dept. of Civil and Environmental Engr., Washington State University, Pullman, Washington, 1983.

Hines W.W., and D.C. Montgomery, "Probability and Statistics in Engineering and Management Science, "John Wiley & Sons, New York, New York, 1980.

Hoar, William S., "The Analysis of Behaviour of Fish," H.R. MacMillan Lectures in Fisheries: The Investigation of Fish-Power Problems,* Symp. of April 29-30, 1957, Inst. of Fisheries, Univ. of British Columbia, Vancouver, pp. 99-111, 1958.

Hoar, U.S. and Randall, D.J. (Eds.), "Fish Physiology," Vol. VI, Chap I, (F.E.J. Fry, Environ. Effects on Physiology--Ref.29), Academic Press, N.Y., pp. 1-98, 1971.

Hoar, U.S. and Randall, D.J. (Eds.), "Fish Physiology," Volume VII, Locomotion (Selected chapters on locomotion, swimming capacity, and hydrodynamics by Lindsey, Beamish and Webb, see separate references by these authors), Academic Press, New York, 1978.

Holmes, H.B. and Bell, M.C., "A Study of the Upstream Passage of Anadromous Fish at Willamette Falls with Recommendations for Improvements in Fish-Passage Facilities," Final Report (unpublished) to Oregon Fish Comm., Portland, OR, 1960.

Homma, M., "An Experimental Study on Waterfall,* Proceedings of the Minnesota International Hydraulics Convention, International Association for Hydraulic Research and the Hydraulics Division, American Society of Civil Engineers, Joint Meeting, Univ. of Minnesota, Minneapolis, Minnesota, 1953.

Horak, Donald L., "Survival of Hatchery-Reared Rainbow Trout (Salmo gairdneri) in Relation to Stamina Tunnel Ratings," J. Fish. Res. Bd. Canada 29:1005-1009, 1972.

Hourston, W.R., *Power Developments and Anadromous Fish in British Columbia," H.R. MacMillan Lectures in Fisheries: The Investigation of Fish-Power Problems, Symp. of April 29-30, 1957, Inst. of Fisheries, Univ. of British Columbia, Vancouver, 15-24, 1958.

Hunter, V.A., M.D. Knittel, and J.L. Fryer, "Stress-Induced Transmission of Yersina Ruckeri Infection from Carriers to Recipient Steelhead Trout Salmo gairdneri (Richardson)," J. Fish. Diseases, 3:477-472, 1980.

Idler, D.R. and Clemsen, W.A., "The Energy Expenditures of Fraser River Sockeye Salmon during the Spawning Migration to Chilko and Stuart Lakes," Inter. Pac. Sal. Fish. Comm., New Westminister, B.C., Canada, 1959.

Idyll, C.P., "The Incredible Salmon," National Geographic Magazine, Vol. 134, No. 2, August, 1968.

Institution of Civil Engineers, Report of the Committee on Fish-Passes, William Clowes and Sons, Limited, London, 1942, Reprinted 1948.

Jackson, J.R., "Variations in Flow Patterns at Hell's Gate and Their Relationships to the Migration of Sockeye Salmon," Intl. Pac. Salmon Fish. Comm. Bull. No. 3:85-129, 1950.

Jones, D.R., Kiceniuk, J.W., and Bamford, O.S., "Evaluation of the Swimming Performance of Several Fish Species from the Mackenzie River," J. Fish. Res. Bd. Canada, 31(10), 1974.

Katopodis, C. and Rajaratnam, N., "A Review and Laboratory Study of the Hydraulics of Denil Fishways," Can. Tech. Rpt. of Fisheries and Aquatic Sciences No. 1145, Winnipeg, Manitoba, 1983.

Kay, A.R. and Lewis, R.B., "Passage of Anadromous Fish through Highway Drainage Structures," Calif. Div. of Highways. Res. Rpt. 629110, 15 p. plus tables and figures, 1970.

Kerr, Cons et al., "Stream Enhancement Guide," Prepared for Prov. of British Columbia, Ministry of the Environment, Vancouver, B.C., 82 p., 1980.

Kipper, Z.M. and Mileiko, I., "Fishways in Hydrodevelopments of the USSR," Rybnoe Khozyaistvo, Moscow, 1962, Translated by A. Wald, Israel, Program for Scientific Translations, Ltd., U.S. Dept. of Commerce, CFSTI, Springfield VA, 1967.

Kutty, M.N. and Saunder, R.L., "Swimming Performance of Young Atlantic Salmon (Salmo salar) as Affected by Reduced Ambient Oxygen Concentration," J. Fish. Bd. Canada 27:1987-1995, 1973.

Lauman, Jim E., "Salmonid Passage at Stream Road Crossings," A Report with Dept. Standards for Passage of Salmonids, Ore. Dept. of Fish and Wildl., Portland, 1976.

Lighthill, M.J., "Large-Amplitude Elongated-Body Theory of Fish Locomotion," Proc. R. Soc., Ser. B 179, p. 125-138, 1971.

Lighthill, M.J., "Aquatic Animal Propulsion of Fish Hydro-Mechanical Efficiency," J. Fluid Mech., 44:265-301, 1977.

Lighthill, Sir James, "Mathematical Theories of Fish Swimming," in Fisheries Mathematics, pp. 121-144, Ed. J.H. Steele, Marine Lab Aberdeen, Scotland, 1977.

Lind, O.T., "Handbook of Common Methods in Limnology," C.V. Mosby Co., St. Louis, MO, 1974.

Lindsey, C.C., "Form, Function and Locomotory Habits in Fish," Chap. 1 in Vol. VII of Fish Physiology Locomotion (Eds. Hoar and Randall, Ref. 44), Academic Press, New York, pp. 1-100, 1978.

Liscon, K.L., "Orifice Placement in Gatewells of Turbines Intakes for Bypassing Juvenile Fish Around Dams," Trans. Amer. Fish. Soc. 100(2), March, 1971.

Long, Clifford W., "Passage of Salmonids Through a Darkened Fishway," USFWS, Fisheries No. 300, May, 1959.

Lowman, Ben J., "Investigation of Fish Passage Problems through Culverts," USDA Forest Ser. Equipment Development Center, ED&T 2427, Missoula, MT, 1974.

MacPhee, Craig and Watts, F.J., "Swimming Performance of Arctic Grayling in Fishway Culverts," Final Proj. Rpt. to USFWS, Anchorage, AK, 41 p., 1976.

Mahmood, Khalid, "Fish Facilities at River Development Projects," Institute of River Mechanics, Colorado State University, Ft. Collins, CO, August 11, 1972.

McKeown, B.A., "Fish Migration," Croom Helm, London and Timber Press, Portland, Oregon, 1984.

McKinley, W.R. and Webb, R.D. "A Proposed Correction of Migratory Fish Problems at Box Culverts," Washington Dept. of Fisheries, Fish. Res. Papers, 1(4)33-45, 1966.

McLeod, A.M. and Nemenyi, Paul, "An Investigation of Fishways," University of Iowa, Studies in Engr. Bulletin 24, 1939-1940.

McNeish, Dennis J. and Hatch, R.W., "Stamina Tunnel Tests on Hatchery-Reared Atlantic Salmon," The Progressive Fish-Culturist, 40(3), July, 1978.

Meehan, William R., "Fish Habitats," In The Forest Ecosystem of Southeast Alaska, Part 3, USDA For. Ser. Gen. Tech. Rpt. PNW-15, 1974.

Menzies, W. J.M., "Salmon Passes--Their Design and Construction, 1 at Smaller Obstructions," Fish. Bd. of Scotland, His Majesty's Stationery Office, Edinburq, 1934.

Michel, B. and Nadeau, R., "A New Type of Fishway Designed for Continuous Operation," La Houille Blanche, 20(6), October, 1965 (in French).

Mills, Derek, "Salmon and Trout: A Resource, Its Ecology, Conservation and Management," Oliver and Boyd, Edinburq, 336 p. ,1971.

Milne, D. J., "Moricetown Falls as a Hazard to Salmon Migration," Bull. Fish. Res. Bd. Canada (86), 1950.

Moffit, Christine M., Kynard, B., and Rideout, S., "Fish Passage Faciltities and Anadromous Fish Restoration in the Connecticut River Basin," Fisheries 7(6), November-December, 1982.

Natl. Marine Fish. Svc., Information on Fish Facilities, Portland, OR, 1979.

Nemenyi, Paul, "An Annotated Bibliography of Fishways," Iowa State Conservation Commission, University of Iowa, No. 389, 1941. Also published by the University of Iowa, Studies in Engineering Bull. 23, Iowa City, 1941.

Neproshin, A.Y., "The Acoustic Behavior of Some Far Eastern Salmon in the Spawning Period," Journal of Ichthyology, 14(1):154-157, 1971.

Nikolayev, A.S. and Neproshin, A. Yu, "Acoustic Activity of the Sockeye in Fresh Water," Journal of Ichthyology, 12(1):134-143, 1969.

Northwest Power Planning Council, "Northwest Energy News," Vol. 1(3), May/June, 1982, p. 17.

Northwest Power Planning Council, "Columbia River Basin Fish and Wildlife Program," Portland Region, Adopted November 15, 1982, Amended Oct. 10, 1984.

Orsborn, John F., "Preliminary Notes on the Development of a Fish Ladder for Small Systems," Suislaw National Forest, Corvallis, Oregon, April 20, 1981.

Orsborn, J.F., "Low-Cost Fish Passage Facilities at Five Waterfalls," Stikine and Ketchikan Areas, Tongass National Forest, Alaska, 1982.

Orsborn, John F., "Relationships between Fish and Velocity," USDA, Tongass Natl. For., Ketchikan, AK, August, 1983.

Osborne, M.F.M., "The Hydrodynamical Performance of Migratory Salmon," J. Exp. Biol. 38:365-390, 1961.

Paulik, G.J. and DeLacy, A.C., "Swimming Abilities of Upstream Migrant Silver Salmon, Sockeye Salmon, and Steelhead at Several Water Velocities," Univ. Wash. Coll. Fish. Tech. Rpt. 441, 40 p., 1957.

Paulik, G.A., DeLacy, A.C., and Stacy, E.F., "The Effect of Rest on the Swimming Performance of Fatigued Adult Silver Salmon," Univ. Wash. Coll. Fish. Tech. Rpt. 31, 24 p., 1957.

Penny, D.J.,Personal Communications, ARMCO Canada Ltd., Guelph, Ontario, 1982, with article on "The Fish Must Get Through," Author Unknown, Civil Public Works, Sept., pp. 8-10, 1982.

Perkins, L.Z. and Smith, P.M., "Modification of Fish Ladders, Bonneville Dam, Columbia R. Oregon and Washington," Hydraulic Model Investigation, U.S. Army Corps of Engrs, North Pac. Div., Hyd. Lab Tech. Rpt. No. 141-1, Bonneville, OR, December, 1973.

Pickering, A.D. (Ed), "Stress and Fish," Academic Press, Ltd., London, 1981.

Platts, W.C., "Trout Streams and Salmon Rivers" (Their Management and Improvement), The Field Press Ltd., London, 1930.

Powers, E.B., "Chemical Factors Affecting the Migratory Movements of Pacific Salmon," Publs. Am. Ass. Advmt. Sci., 8:72-85, 1939.

Powers, E.B., "Physio-chemical Behaviors of Waters as Factors in the Homing of the Salmon," Ecology 22:1-16, 1941. From Banks, J.W., "A Review of the Literature on the Upstream Migration of Adult Salmonids," J. Fish. Biol. 1:85-136, 1969.

Pryce-Tannatt, T.C., "Fish Passes in Connection with Obstructions in Salmon Rivers, "The Buckland Lectures for 1937, Edward Arnold and Co., London, England, 1938.

Rajartnam,N. and Katopodis, C., "Hydraulics of Denil Fishways," Amer. Soc. Civil Engrs., Journal of Hydraulic Engr., V. 110(9), September, 1984. (Summary of report No. 1145 by Katopodis and Rajaratnum).

Renard, K.G. and Laursen, E.M., "Dynamic Behavior Model of Ephermeral Stream," J. Hyd. Div., ASCE, 101 (HY5):511-528, 1975.

Richey, E.P., "A Model Study of Some Fish Facilities for the Proposed Mayfield Dam," University of Washington, Seattle, January, 1957.

Richardson, E.G., "The Physical Aspects of Fish Locomotion," J. Exp. Biol. 13(1):63-74, 1936.

Rizzo, B., "Fish Passaqe Facilities Design Parameters for Connecticut River Dams, Holyoke Dam," Bureau of Sport Fisheries and Wildlife, Boston, Massachusetts, November, 1968.

Rizzo, B., "Fish Passaqe Facilities Design Parameters for Connecticut River Dams," Vernon, Bellows and Wilder Dams, Bureau of Sport Fisheries and Wildlife, Boston, MS, 1968-1970.

Rizzo, B., "Fish Passage Facilities Design Parameters for Connecticut River Dams," U.S. Bureau of Sport Fish and Wildlife, August, 1969.

Rizzo, B., "Fish Passaqe Facilities Design Parameters for Connecticut River Dams," Turner Falls Dan, Bureau of Sport Fisheries and Wildlife, Boston, MS, August, 1969.

Rizzo, B., "Fish Passage Facilities Design Parameters for Connecticut River Basin," Rainbow Dam, Bureau of Sport Fisheries and Wildlife, Boston, MS, March, 1972.

Rouse, H., J.W. Howe, and D.E. Metzler, "Experimental Investiqation of Fire Monitors and Nozzles," Proc. Am. Soc. Civ. Enq., Vol. 77, pp. 1147-1175, 1951.

Sakowicz, Stanislaw and Zarnecki, Stanislaw, "Pool Passes--Biolqical Aspects in Their Construction," Roczniki Nauk Rolniczych, Warsaw, Poland, 69, Series D5, p. 171, 1954, Translated from Polish 171, U.S. Dept. of Comm. Office of Tech. Serv., Washington, D.C., 1962.

"Salmonid," Dept. of Fish. and Oceans, Vancouver, B.C., Vol. VIII, No. 4, 1983.

Sedqwick, S.D., Personal Communication--Response to Design Questionnaire, 1982.

Slatick, Emil, "Laboratory Evaluation of a Denil-Type Steeppass Fishway with Various Entrance and Exit Conditions for Passage of Adult Salmonids and American Shad," U.S. Fish and Wildlife Serv., March, 1969.

Slatick, Emil, "Passage of Adult Salmon and Trout through Pipes," U.S. Fish and Wildlife Service, Fisheries No. 592, January, 1970.

Smallwood, S., "A Way Out for Trout," Ducks Unlimited, p. 14-15, Sept./Oct., 1982.

Steele, J.H. (Ed.), "Fisheries Mathematics," The proceedings of a conference organized by the Institute of Mathematics and its applications at the Marine Laboratory, Aberdeen, Scotland, (Nov. 24-26, 1975), 1977.

Steele, J.H., Wardle, C.S. and Reid, A., "The Application of Large Amplitude Elongated Body Theory to Measure Swimming Power in Fish, Chap. 11, in Ref. 89, 1977.

Stringham, E. 1924. "The Maximum Speed of Fresh-Water Fishes," Amer. Nat. 58:156-161, 1924.

Stuart, T.A., "The Leaping Behavior of Salmon and Trout at Falls and Obstructions," Department of Aq. and Fish. for Scotland, Freshwater and Salmon Fisheries Research, His Majesty's Stationery Office, Edinburgh, No. 28, 1962, Reprinted in 1964.

Symons, P.E.K., "Leaping Behavior of Juvenile Coho (Oncorhynchus kisutch) and Atlantic Salmon (Salmo salar)," J. Fish. Res. Bd. Canada 35:907-909, 1978.

Tack, Stephen L. and Fisher, Jack G., "Performance of Arctic Grayling in a Twenty-Foot Section of Model 'A' Alaska Steeppass Fish Ladder," Report to the Army Corps of Engrs Alaska Division, 1976.

Talbot, G.B., "A Biological Study of the Effectiveness of Hell's Gate Fishways," Intl. Pac. Salmon Fish. Comm., Bull. III Part 1:7-80, 1950.

Tavolga, William N., "Masked Auditory Thresholds in Teleost Fishes," Dept. of Animal Behavior, The American Museum of Natural History, N.Y. Dept. of Biology, The City College of the City University of New York. date?

Taylor, G.I., "The Action of a Surface Current Used as a Breakwater," Proc. Royal Soc., Vol. A231, 1955.

Thomas, Allen E. and Donahoo, Michael J., "Differences in Swimming Performance Among Strains of Rainbow Trout (Salmo gairdneri). J. Fish. Res. Bd. Canada 34:304-306, 1977.

Thompson, C.S., "Effect of Flow on Performance and Behavior of Chinook Salmon in Fishways," USFWS Bur. Comm., Fish. Spec. Sci. Rpt. Fisheries No. 601, 1970.

Thompson, C.S. and Gauley, J.R., "Laboratory Evaluation of 1-on-10 Slope Ice Harbor Fishway Design," USFWS, Bur. Comm. Fish. Spec. Sci. Rpt. Fisheries No. 509, 1965.

Thompson, C.S., Davis, W.S. and Slatick, E., "Response of Migrating Adult Salmonids to Vertical and Horizontal Rectangular Orifices at Two Depths," USFWS, Spec. Rpt. Fisheries No. 547, Washington, D.C., June, 1967.

Tinbergen, N., "The Study of Instinct," Claredon Press, Oxford, 1951.

Tredger, C.D., "Experimental Testing of Kokanee Passage in an Aeroceanics Spiral Fishway at Meadow Creek, B.C.," For G.D. Taylor, Fish Habitat Improvement Section, Fish and Wildlife Branch, Ministry of Environment, Victoria, B.C., May, 1982.

Trefethen, Parker S., "Effect of Impoundments on Migratory of Fish," In Fish-Passage Research, Review of Progress, 1961-1966, U.S. Bur. of Comm. Fish. Circular 254:3-5, Seattle, WA, October, 1968.

Trefethen, Parker S., "Passage of Migrant Fish at Dams," In Fish-Passage Research, Review of Progress, 1961-1966," U.S. Bur. of Comm. Fish. 254:1-14, Seattle, WA, October, 1968.

Truebe, J. and Drooker, M., "Modular Innovations in Upstream Fish Passage," DOE/ID/12207-T2 (Cont. No. 82010268), Dept. of Energy, Available from NTIS, 1981.

U.S. Army Corps of Engineers, North Pacific Division, "Buoyant Submerged Orifice Research," p. 56, In Progress Report on Fisheries-Engineering Research Program," Portland, OR, November, 1956.

U.S. Army Corps of Engineers, North Pacific Division, "Fishway Attraction Water Supply Study," pp. 43-45, In Progress Report on Fisheries-Engineering Research Program, Portland, July, 1960.

U.S. Army Corps of Engineers, North Pacific Division, "Powerhouse System Attraction and Transportation Flows, Bonneville Dam," pp. 42-48, In Progress Report on Fisheries-Engineering Research Program, November 1956 and July 1960.

U.S. Army Corps of Engineers, North Pacific Division, "Research on Fishway Problems." pp. 76-90A, In Progress Report on Fisheries-Engineering Reserach Program, July. 1960.

U.S. Army Corps of Engineers, North Pacific Division, "Submerged Orifice Research Powerhouse Fish Collection, Bonneville Dam," pp. 67-73, In Progress Report on Fisheries--Engineering Research Program, pp. 131-135, November, 1956 and July 1960.

U.S. Army Engineering Division, Hydraulic Laboratory River, "Fish Ladder for Charles River Dam, Charles River, Mass.," Tech. Rept. No. 157-1, December, 1977.

U.S. Department of Agriculture Forest Service, Notes on "Model Demonstration, Helical Fishway," Memorandum to Director Fish and Wildl. Management R-6, May 24, 1982.

U.S. Department of Interior, "Determination of Fishway Size--Columbia River," Bureau of Commercial Fisheries, Columbia Fisheries Program Office, Portland, Oregon, 1960.

VanDerwalker, J.G., "Response of Salmonids to Low Frequency Sound," in Marine Bio-Acoustics, Vol. 2, Proc., 2nd Symposium, 13-15 April, 1967.

VanDomelen, J.L. and Garber, W.E., "Engineering Study Report of Fish Passage Facilities on North Santiam River near Stayton Oregon," Fish Commission of Oregon. Portland, Oregon, 1964.

Vaux, W.G., "Interchange of Stream and Intragravel Water in a Salmon Spawning Riffle," USFWS Spec. Sci. Rpt. Fish., No. 405, p 11, 1962.

Vincent, R.E., "Some Influences of Domestication Upon Three Stocks of Brook Trout Salvelinus fontinalis (Mitchill), "Trans. Am. Fish. Soc. 89:35-52, 1960.

Walker, M. Greer and Emerson, L., "Sustained Swimming Speeds and Nyotomal Muscle Function in the Trout," J. Fish. Biol. 13:475-481, 1978.

Wardle, C.S., "Limit of Fish Swimming Speed," Nature, 225:725-727, 1975.

Ware, D.M., "Bioenergetics of Pelagic Fish: Theoretical Change in Swimming Speed and Ration with Body Size," Bedford Institute of Oceanography, Canada, 1976.

Warner, J., Personal communication, 1985.

Watts, F.J., "Design of Culvert Fishways," Water Resources Research Inst., Univ. of Idaho, Moscow, ID, 1974.

Weaver, Charles R., "Influence of Water Velocity Upon Orientation and Performance of Adult Migrating Salmonoids," USFWS Bur. Comm. Fish. 63(1):97-121, 1963.

Webb, P.W., "The Swimming Energetics of Trout," I) Thrust and Power Output at Cruising Speeds, J. Exp. Biol. 55:489-520, 1971a.

Webb, P.W., "The Swimming Energetics of Trout,* II) Oxygen Consumption and Swimming Efficiency, J. Exp. Biol. 66:521-540, 1971b.

Webb, P.W., "Hydrodynamics and energetics of fish propulsion," Bull. Fish. Res. Bd. Can., 190:159, 1975.

Webb, P.W., "Hydrodynamics: Nonscombroid Fish," Chap. 3 in Vol. VII of Fish Physiology (Eds. Hoar and Randall, Ref. 44), Academic Press, New York, pp. 189-237, 1978.

Webster, D.A., "Leaping Rainbows of the Finger Lakes," N.Y. State Conservation Dept., Division of Conservation Education, Information Leaflet, 1965.

Weihs, D., "Optimal Fish Cruising Speed," Nature, 245: September, 1973.

Weihs, D., "Energetic Advantages of Burst Swimming of Fish," J. Theor. Biol., 48:215-229, 1974.

Weihs, D., "Some Hydromechanical Aspects of Fish Schooling," in Swimming and Flying in Nature, Vol. 2, Eds., T.Y. Wu, C.J. Brokaw, and C. Brennen, p. 203-218, New York, Plenum, 1974.

Welch, H.E., "Swimming Performance of Arctic Char from the Saqvaqjuac River, Northwest Territories," West. Reg. Dept. Fish. and the Environ, Fish. and Mar. Svc. Tech. Rpt. 854, 1979.

White, C.M. and Nemenyi, P., "Survey of the Hydraulic Investigations Carried Out," within Part III of Report of the Committee on Fish-Passes, Institution of Civil Engineers, William Clowes and Sons, Limited, London, 1942, Reprinted 1948.

White, D.K. and Pennino, B.J., "Connecticut River Fishways: Model Studies," J. Hyd. Div. ASCE, 106(HY7): Paper No. 15554, July 1980.

White, W.R. and Hartley, W.G., "Experiments to Compare the Passage of Fish Over Two Triangular Profile Flat-Vee Weirs," Hydraulics Research Station, Report No. INT67, Wallingford, England, n.d.

Wickett, W.R., "The Oxygen Supply to Salmon Eggs in Spawning Beds," J. Fish. Res. Bd. Can., 11:(6)933-953, 1954.

Ziemer, G.L., File Notes
(1) "Fishways for Heights Under 20 feet"
(2) Data Required for Planning Fish Facilities
(3) Fishway Design
(4) Alaska Dept. of Fish and Game (1960)

Ziemer, G.L., "Fish Transport in Waterways," Alaska Dept. of Fish and Game, 1961.

Ziemer, G.L., "Steeppass Fishway Development," Alaska Dept. of Fish and Game, Info. Leaflet No. 12, April 17, 1962.

Ziemer, G.L. and Behlke, C.E., "Analysis of Salmon Capabilities in Steep Fish Ladders," Proc. Second Annual American Water Resources Conference, Univ. of Chicago, Nov. 1966.

APPENDIX II

RESEARCH SUMMARY FOR THE INITIAL DEVELOPMENT OF NEW CONCEPTS IN WEIR AND POOL FISH LADDER DESIGN

Prepared by

ROBERT G. AASERUDE

On work conducted in 1982-83

TABLE OF CONTENTS

	Page
Fundamental Ideas	145
Components and Functions	145
Summary of Test Programs and Significant Results	146
Half-Scale Model/Weir Optimization Study	146
Full-Scale Model/Energy Dissipation Study	151
Survey, Interviews, and Literature	154
Summary	156
General Structural Considerations	157
Final Weir and Pool Design	158
REFERENCES	161

LIST OF FIGURES

Figure		Page
1.	Waterfall Weir Chamber and Nomenclature	147
2.	Schematic of Fishway Entrance Chamber	148
3.	Schematic of Fishway Exit Chamber	148
4.	Subfunction Analysis for Weir Chamber of Fish Ladder	149
5.	Subfunction Analysis for Entrance Chamber of Fish Ladder	149
6.	Subfunction Analysis for Exit Chamber of Fish Ladder	149
7.	Hexagonal Weir Shape with One-on-One Side Slopes	150
8.	Semicircular Weir Shape	150
9.	Trapezoidal Weir Shape with Four-to-One Side Slopes	150
10.	Triangular Weir Shape with a 68-Degree V-Notch	150
11.	Ogee crested weir with sidewalls and rounded entrance that was developed by a trial and error approach concurrent with the systematic approach of the weir optimization study	152
12.	Frothy appearance of the standing wave formed downstream of the plunging jet	152
13.	Semicircular Weir Shape Identified in the Weir Optimization Study as the Best Weir Shape, Looking Upstream	153
14.	Baffle Pattern Used in the Energy Dissipation Study	153
15.	Baffle pattern designed to shut off the boundary flow and pass incrementally large volumes of flow per unit area towards the upper center of the pool	155
16.	Plan view showing baffling orientation	155
17.	Plan view of possible configurations using standard modular components	159
18.	Recommended geometry for new weir and pool fishladder	160

APPENDIX II.

RESEARCH SUMMARY FOR THE INITIAL DEVELOPMENT OF NEW CONCEPTS IN WEIR AND POOL FISH LADDER DESIGN

Fundamental Ideas

Since Stuart's (1962) investigation of the leaping behavior of salmon and trout, it has been known that salmonids can be stimulated to leap when presented with certain hydraulic conditions. Stuart identified the standing wave developed downstream of flow plunging into a pool as a significant hydraulic condition for leaping. Fish initiate their leaps from the standing wave and utilize the upward flow momentum of the wave as a boost. The utilization of the upward flow momentum increases the maximum height that a fish can jump, thus possibly extending the range of its upstream migration, and also provides an advantage in terms of bioenergetic efficiency. Since anadromous salmon have fixed energy reserves when they begin their upstream migration, the efficient use of their reserves can have an important bearing on whether they spawn successfully.

The swimming motion of fish, whether it is constant or varied, also influences their bioenergetic efficiency. Weihs (1974) has shown that a burst-glide sequence of swimming motion offers energetic advantages over constant swimming motion. The burst-glide swimming sequence is characteristic of leaping. If the accurate leaping of fish can be obtained, leaping offers the most energetically efficient means of passing fish upstream of an obstruction.

The objective of the "waterfall weir" fishway is to provide fish with hydraulic conditions which are optimal for leaping. By accomplishing this objective, fish will be stimulated to pass an obstruction in as swift and efficient a manner as possible.

Components and Functions

A hydraulic system, such as the waterfall weir fishway, consists of various components and functions with complex interactions. To facilitate the understanding of the system it is helpful to identify each component (Figures 1, 2, and 3) and the corresponding functions (Figures 4, 5, and 6). Only with this understanding is it possible to develop and integrate a test program which will provide feedback concerning system response which is meaningful With understanding and feedback, it is possible to test and adjust the system to achieve the program objective.

Some pertinent definitions follow:

(1) Waterfall Weir: Routes the flow through the fishway and concentrates the flow momentum prior to the plunge into the downstream pool. Produces a stable standing wave over a range of flows. Also serves as an access opening to upstream pools for leaping fish.

(2) Overflow Weir: Extends the range of flows over which the fishway can function. From the model studies it is also apparent that the overflow aids with energy dissipation and may enhance the standing wave.

(3) Fishway Chamber: Provides water storage capacity and constitutes the base structure of the fishway. The tank geometry influences the hydraulic conditions developed within the pools of the fishway.

(4) Baffling: Dissipates hydraulic energy, directs flow, and guides fish. Influences the overall hydraulics within the pools of the fishway. Contains turbulence upstream of the baffles in each pool.

(5) Downstream Fishway Portal: Attracts fish to the entrance structure and provides access into the fishway. Serves as the hydraulic exit.

(6) Upstream Fishway Portal: Regulates flow into the fishway and serves as an exit for fish.

Summary of Test Programs and Significant Results

Half-Scale Model/Weir Optimization Study

The purpose of the weir optimization study was to determine the weir shape and orientation angle with the flow that produced the "best" water jet for use in the fishway. Functional considerations included concentration of flow momentum and development of a stable standing wave in the downstream plunge pool.

Four weir shapes were tested: 1) hexagonal with one-on-one side slopes, 2) semicircular, 3) trapezoidal with four-on-one side slopes, and 4) triangular with a 68-degree, V-notch (Figures 7, 8, 9, and 10). Each weir shape was tested at five orientation angles with the flow (rotated about the upstream edge of the weir from the horizontal position). These were 1) 18 degrees, 2) 33 degrees, 3) 45 degrees, 4) 90 degrees, and 5) 135 degrees. Each combination of shape and orientation angle was tested over a range of discharges (0.1-2.0 cfs) and tailwater depths (8-40 inches).

The study identified the semicircular shape oriented at 45 degrees as the best combination. This combination produced the most circular jet, which was the criteria for concentration of flow momentum, and the most stable (height and location) standing wave.

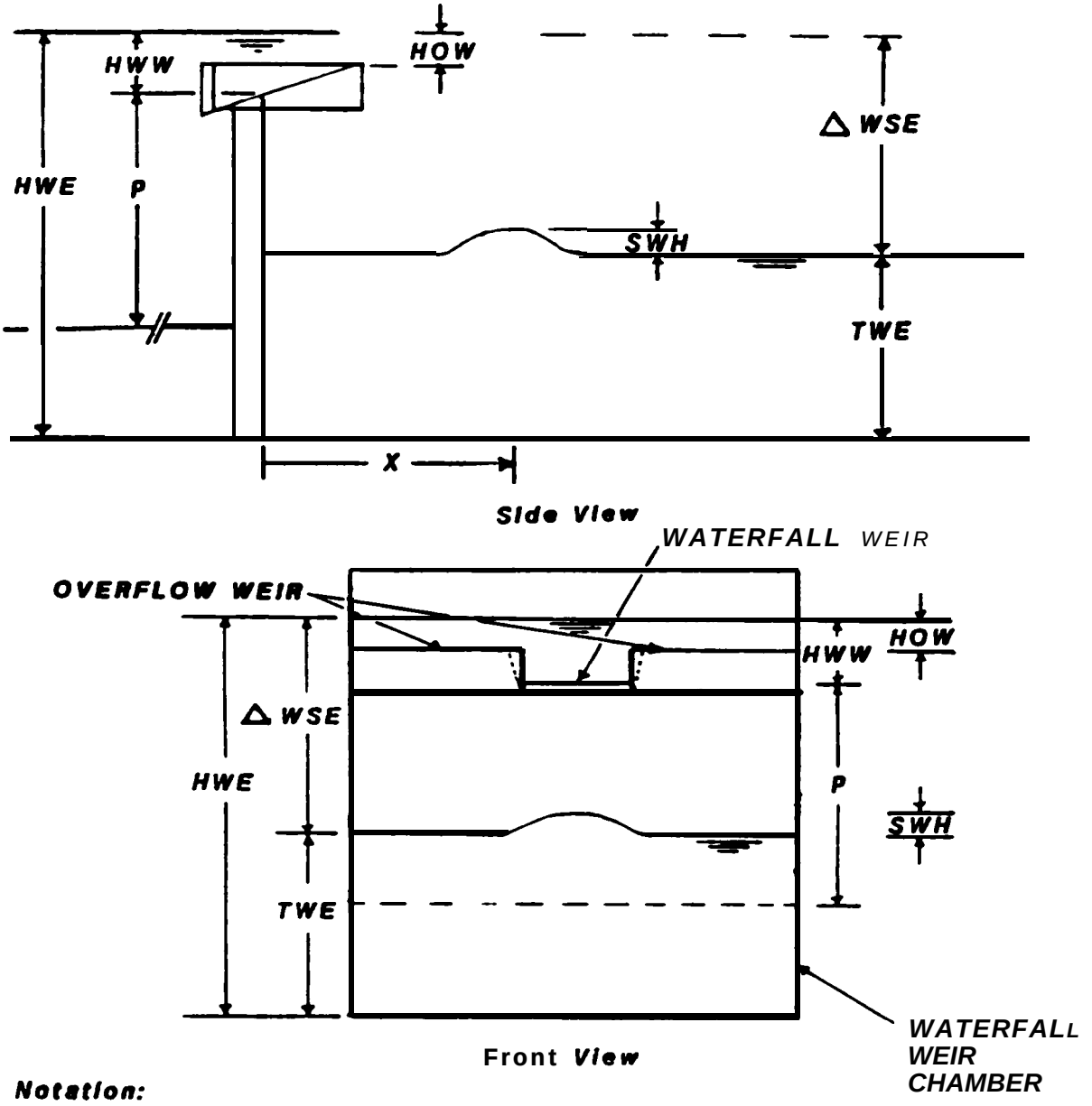

Notation:

HWE = Headwater elevation;
TWE = Tailwater elevation;
Δ WSE = Change in water surface elevation;
P = Distance from upstream tank floor to weir crest;
HWW = Head on waterfall weir;
HOW = Heed on overflow weir;
SWH = Standing wave height;
X = Distance to standing wave from weir bulkhead.

Figure 1--Waterfall Weir Chamber and Nomenclature

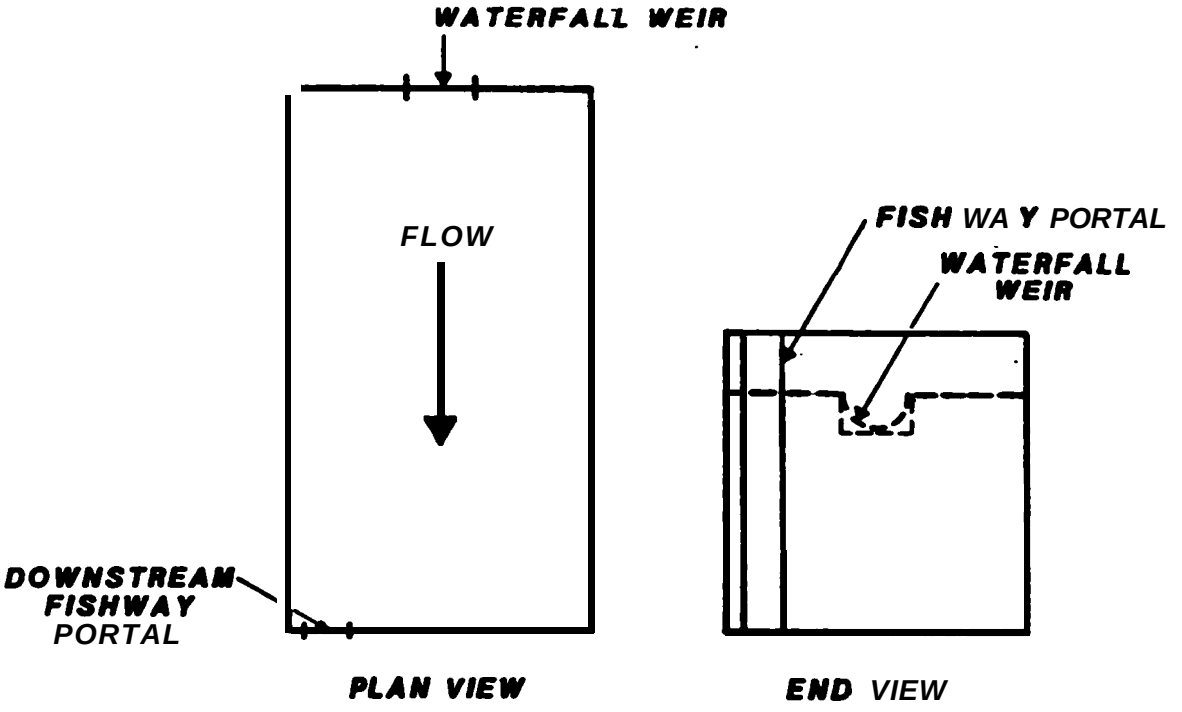

Figure 2--Schematic of Fishway Entrance Chamber

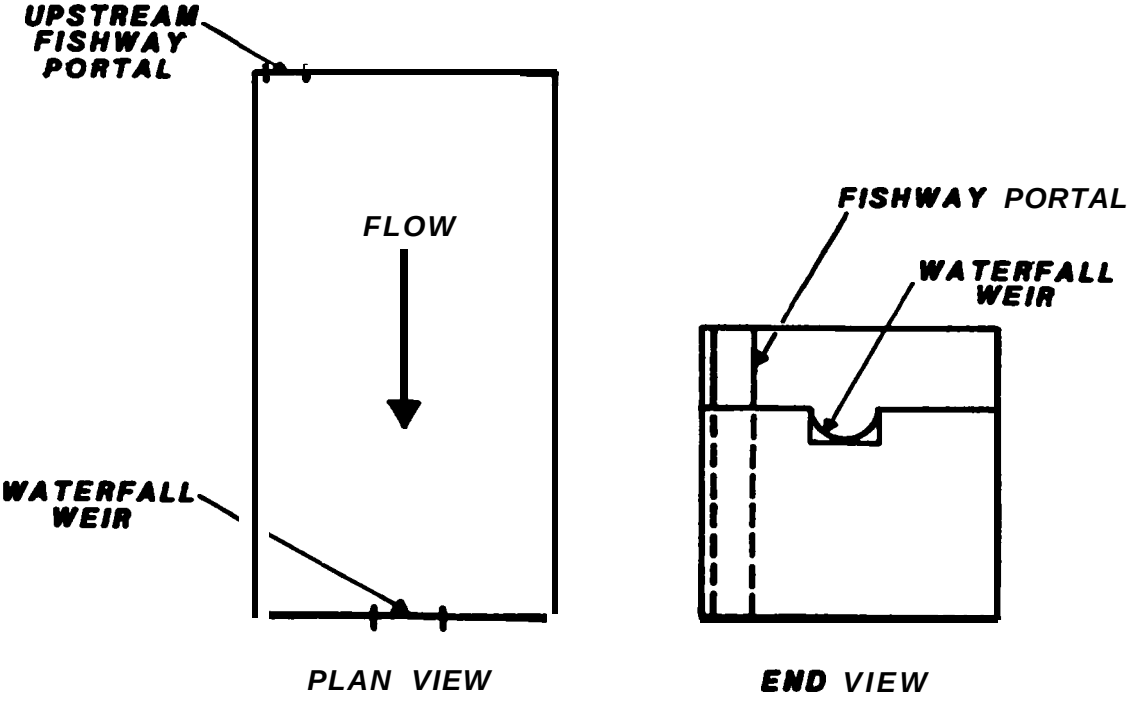

Figure 3--Schematic of Fishway Exit Chamber

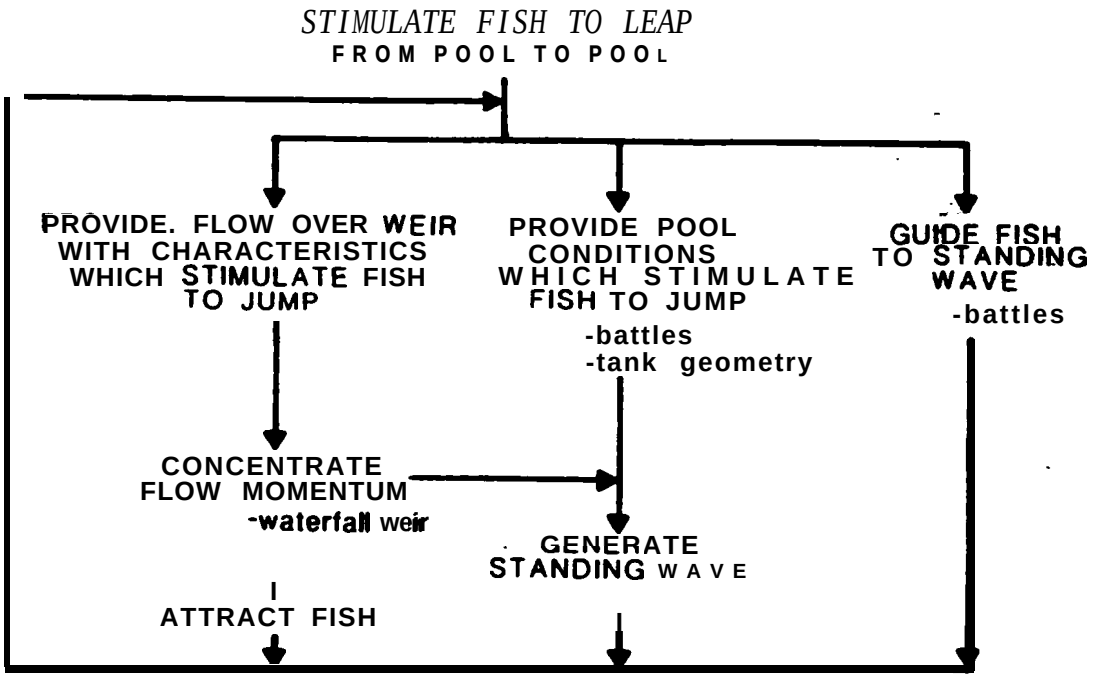

Figure 4--Subfunction Analysis for Weir Chamber of Fish Ladder

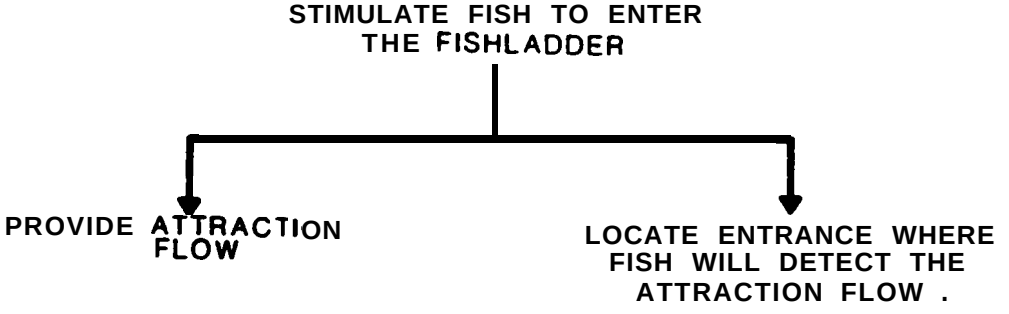

Figure 5--Subfunction Analysis for Entrance Chamber of Fish Ladder

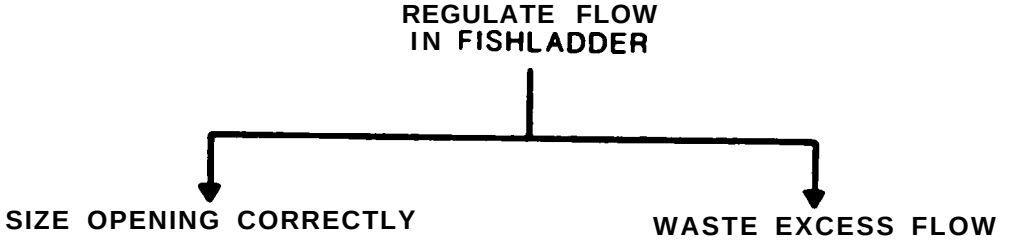

Figure 6--Subfunction Analysis for Exit Chamber of Fish Ladder

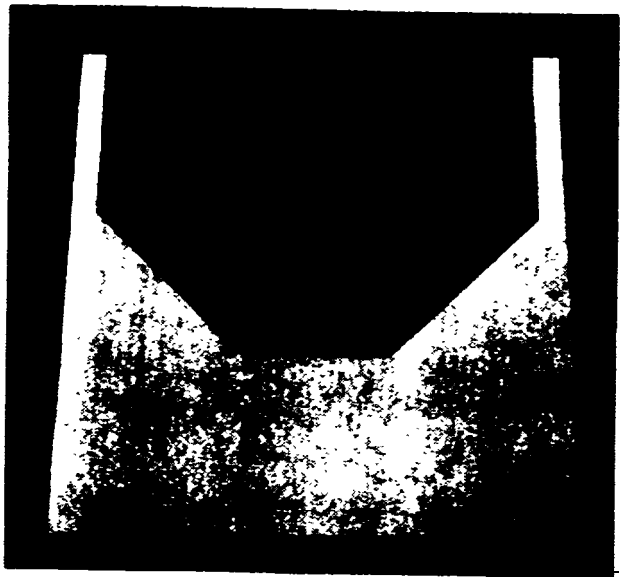

Fig. 7--Hexagonal Weir Shape with One-on-One Side Slopes

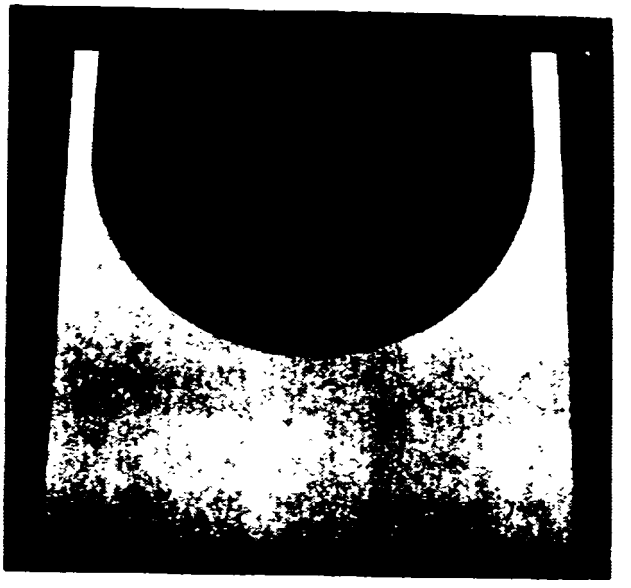

Fig. 8--Semicircular Weir Shape

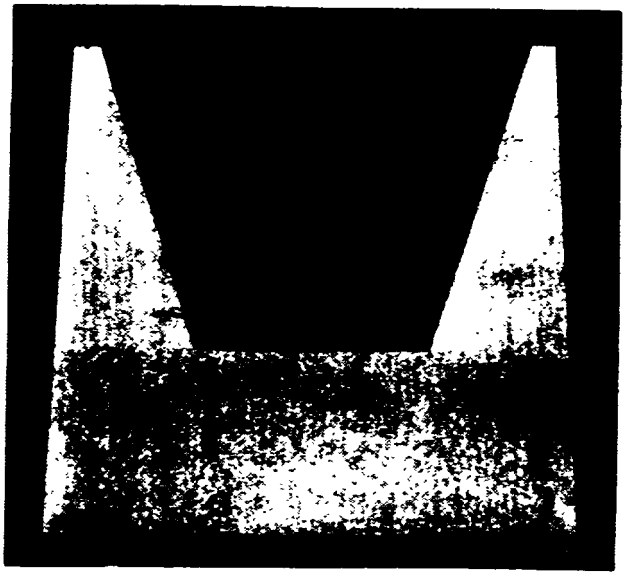

Fig. 9--Trapezoidal Weir Shape with Four- to-One Side Slopes

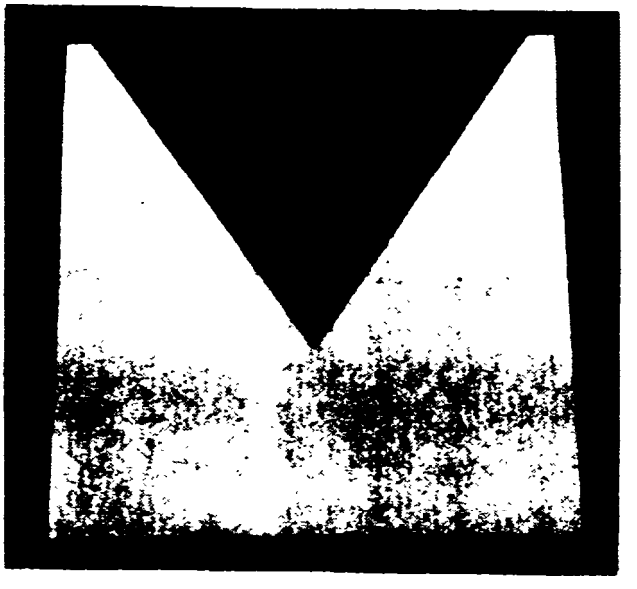

Fig. 10--Triangular Weir Shape with a 68-Degree V-Notch

Additional testing indicated that the incorporation of sidewalls and rounded entrances to the weir further improved the jet shape and stability. These tests were completed early in year 2. (See Project Report Part 2 of 4, Aaserude and Orsborn, 1985).

Full-Scale Model/Energy Dissipation Study

The purpose of the energy dissipation study is to identify the combination of weir and baffling layout which provides the "best" hydraulic conditions for leaping. The essence of this study is the development of the final design for use in prototype fishways. Functional considerations include energy dissipation, flow direction, fish guidance, and standing wave formation and stabilization. A more detailed description of the test has been prepared by Aaserude (1983) and Aaserude and Orsborn (1985).

The qualitative phase of the energy dissipation study has been completed with the result that much has been learned about the response of the system to various baffling and weir layouts. The study proceeded with a trial and error approach to develop the best waterfall weir. This portion of the study was concurrent with the systematic approach taken to identify the best waterfall weir in the weir optimization study. The results highlighted the importance of sidewalls and rounded entrances to the development of a circular jet (Fig. 11). Without sidewalls the jet shape was elongated. To reduce the fluctuations in the location of the standing wave (Fig. 12), an ogee-shape crest was added to the weir to direct the jet along the same plunge path for varying discharges. This effectively helped stabilize the location of the standing wave and could be useful in the final weir design. Because of problems with the integrity of the construction of the weir, the seemingly less than adequate opening for leaping fish and the undesirable jet shape (horseshoe shaped--not circular) produced, the weir was abandoned. It was decided to replace it with the semicircular shape identified in the weir optimization study (Fig. 13).

A rectangular overflow weir layout was studied concurrently with the waterfall weir development. As anticipated, this is a viable way to extend the operational range of discharge through the fishway without adversely affecting the pool hydraulics. After observing the model, it became apparent that the sheetflow characteristic of the overflow could provide some hydraulic benefit. By shearing countercurrents as the sheetflow plunges vertically into the receiving pool, water pile-up and vorticies in the upstream corners of the pool are attenuated and hydraulic energy is dissipated. When the overflow weirs are positioned such that the sheetflow plunges adjacent to the weir bulkhead, the circulation pattern promoted may enhance the standing wave. These qualities were analyzed in the quantitative phase of the study early in year 2.

Figure 11--Ogee-crested weir with sidewalls and rounded entrance that was developed by a trial and error approach concurrent with the systematic approach of the weir optimization study.

Figure 12--Frothy appearance of the standing wave formed downstream of the plunging jet.

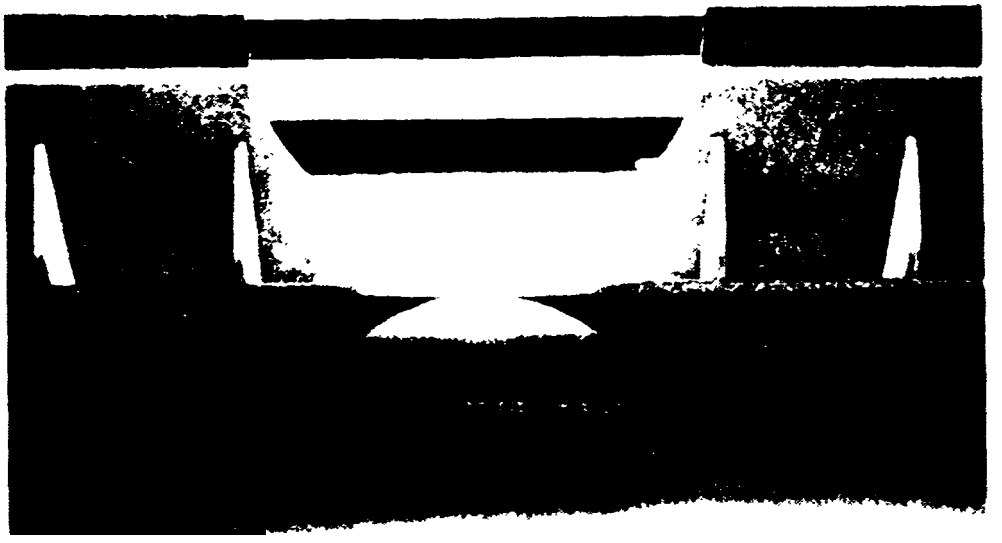

Figure 13--Semicircular Weir Shape Identified in the Weir Optimization Study as the Best Weir Shape, Looking Upstream

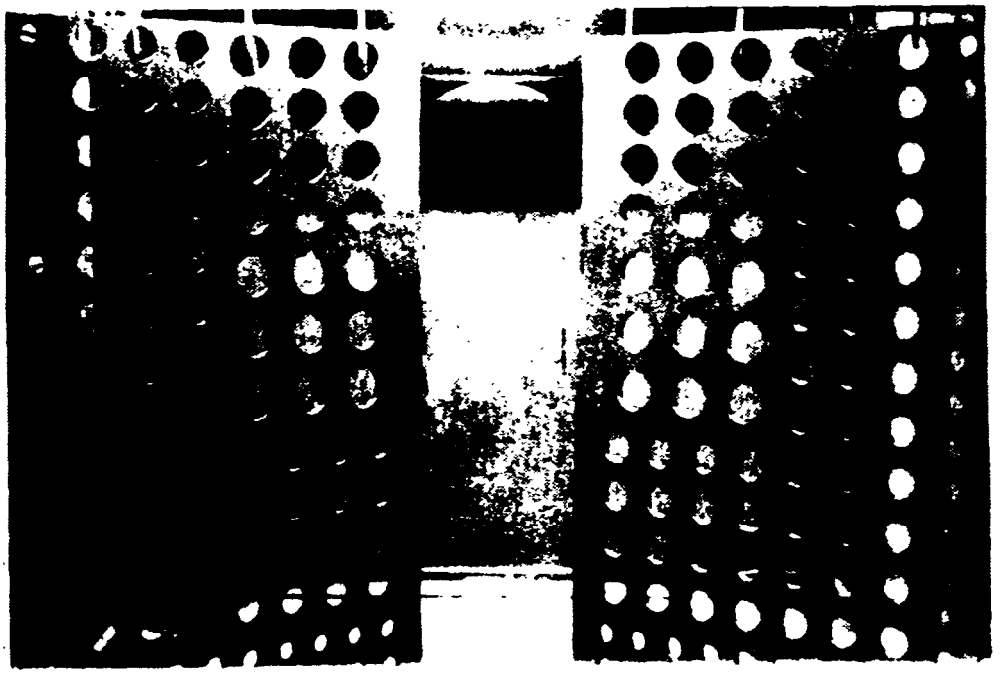

Figure 14--Baffle Pattern Used in the Energy Dissipation Study

Without baffles, a three-foot overfall (US) caused vorticies, scattered areas of upwelling flow, and a generally turbulent appearance throughout the upstream two-third of the receiving pool. Turbulent hydraulic activity was particularly vigorous along the tank boundaries as evidenced by viewing air bubbles entrained in the flow. To prevent the boundary jets from competing with the desired flow path for fish attraction, a baffle pattern was designed which shut off the boundary flow and passed incrementally larger volumes of flow per unit area towards the upper center of the pool (Figs. 14 and 15). When oriented at 45 degrees from the tank sidewalls in the upstream direction, and attached at points such that the plane of the baffle aligns with the far side of the weir (Fig. 16), this baffle eliminated most of the vorticies and upwelling and stabilized the standing wave. As anticipated, the area downstream of the baffles is suitable resting area for fish. The flow moves well, has simple direct flow lines, and has the appearance of "green water." Much of the air entrained by the jet had been caught and vented to the surface by the baffles. The overall performance of the baffle was encouraging. In the succeeding phase of the study the effectiveness of various baffling schemes were quantified.

Following the installation of the semicircular weir that was identified as the best in the weir optimization study, it became apparent that the jet shape was dependent on the orientation of the sidewalls. Testing revealed that both the skew and the lean of the sidewalls significantly affected the jet shape. The less skew and lean, the more laterally expanded the jet shape becomes. Preliminary results were that a 5-degree skew and a lo-degree lean produced the most circular jet. Subsequent testing underscored the influence of discharge on jet shape. Higher discharges tend to expand the cross-sectional jet shape longitudinally. A more thorough analysis of sidewall orientation versus discharge which considers the tradeoffs between the two has been completed. The study identified a workable sidewall orientation for the operational flow range of the fishway early in year 2.

In addition to the hydraulic benefits of the semicircular weir shape, there are two others. One is the 32-inch weir opening. It is anticipated that leaping fish will be sufficiently accurate to hit this opening with a high percentage of success. This opening is eight inches wider than the minimum opening size recommended by Stuart (1962). Tests on leaping accuracy will be conducted this fall. Another benefit is that the simplicity of the weir form lends itself to ease of fabrication. The three-dimensional ogee-crested weir that was developed earlier was not easy to fabricate.

Survey, Interviews, and Literature

The results from the survey, interviews, and literature review provided valuable information that was used in the development of criteria for inclusion in our test programs (Aaserude, 1983). This research also highlighted the need for additional testing by identifying gaps in the understanding of fish capabilities, fish behavior, and fishway performance.

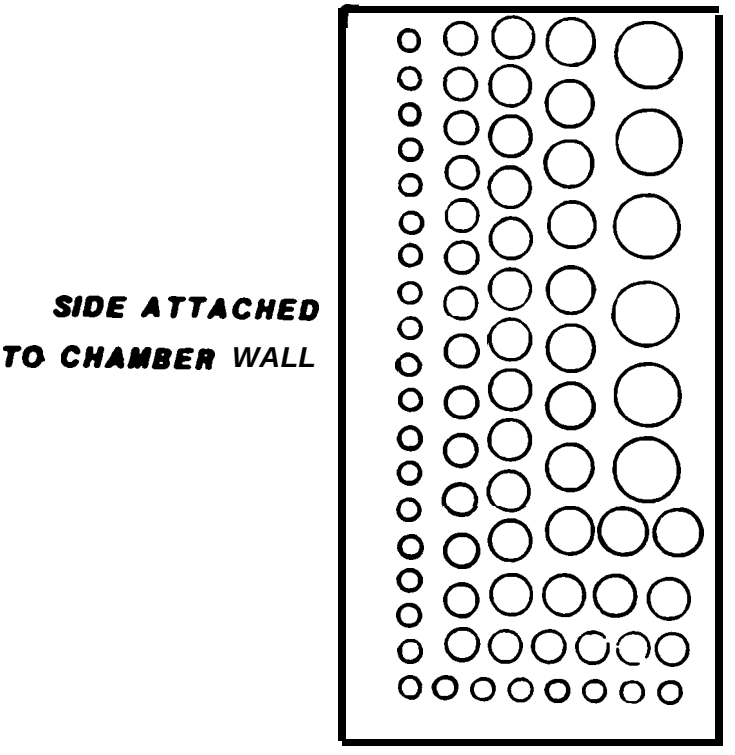

Figure 15--Baffle pattern designed to shut off the boundary flow and pass incrementally larger volumes of flow per unit area towards the upper center of the pool.

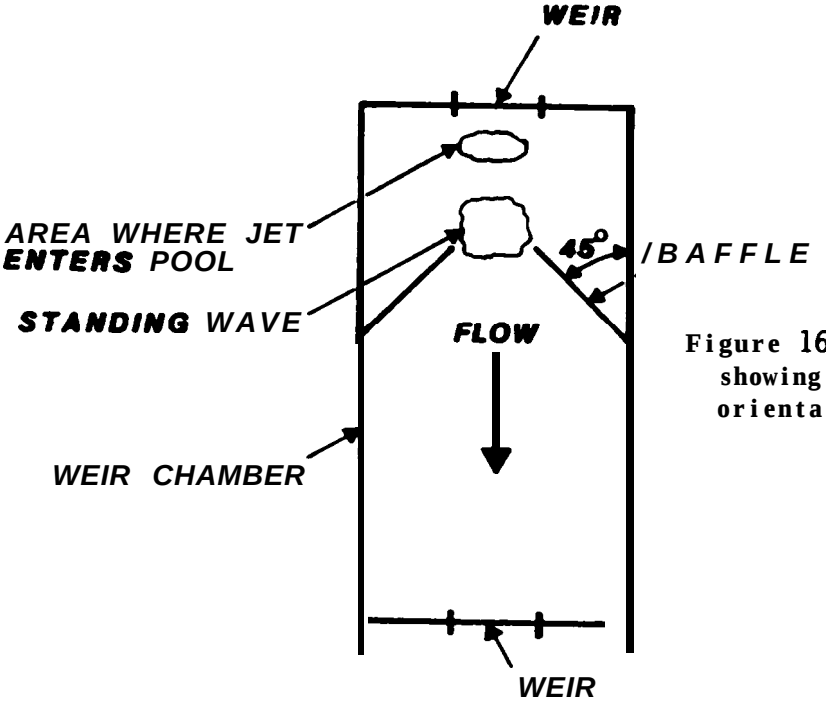

Figure 16--Plan view showing baffle orientation.

The result has been an expanded testing program for year 2 with studies designed to resolve: 1) whether fish can be stimulated to jump, 2) the threshold flow momentum required to stimulate fish to move or leap, 3) fish preference for weirs, slots, or orifices (i.e., testing of the differential flow momentum theory), and 4) the accuracy of leaping fish. Below is a summary of the significant findings resulting from this outside-contact phase of the project, some with application to the new weir-pool-baffle fishway.

Summary

1. In some regions, including Scotland and Nova Scotia, and Canada, weir and pool fishways are preferred. In other areas vertical slot, or weir and orifice types are preferred. Preference seems to be based on tradition and the experience of the designer.

2. Weir and pool fishways have been designed with drops between pools as large as 2.5 feet. With such a drop, fish pass by swimming over the weir (Sedgwick, 1983).

3. At natural falls, fish initiate their leaps from the standing wave formed in the plunge pool.

4. A weir and pool fishway in Scotland uses a rounded weir notch similar to the semicircular weir shape identified in the weir optimization study. This fishway operates successfully with a discharge of 5-6 cubic feet per second (cfs) (Sedgwick, 1983).

5. Much of the disagreement between researchers regarding fish capabilities and behavior can be attributed to the natural variation of the different fish stocks studied and unaccounted for hydraulic conditions at the observation site.

6. The stimulus, fluid, and body mechanics of fish leaping behavior is poorly understood.

7. A weir and pool fishway which utilizes energy dissipation baffles and is designed specifically to promote leaping is a new concept in fishway design.

To convey the flavor of this realm of research, several quotes have been selected:

1. *Jumping still may occur as the phenomenon is not fully understood, although it is known to be triggered by shadow patterns or upwelling," (Bell, 1973, 1984).

2. "Salmon will always avoid having to leap to ascend an obstruction if they can possibly do so, but they frequently indulge in random leaps both at the foot of falls and in pools for no apparent reason," (Sedgwick, 1983).

3. "Salmonids do not jump waterfalls as a last resort but do so with purpose and with a certain calculation." (Bakke, 1983).

4. " . . . the standing wave forming the departure point. It was no accident that these fish, and many others like them, followed an identical route. They picked a common watery pathway enabling them to take full advantage of the hydraulics of the currents and turbulence below the falls--a path culminating in the spectacular jumps." (Webster, 1965).

5. "All leaps in the laboratory and in the field were observed to be initiated at the surface of the pool (on the neutral point of the standing wave) . . ." (Stuart, 1962).

6. "Sensing that the conditions are right to permit their escapement. That is, the proper water velocity (or quantity) to permit their successful navigation over the obstacle," (Evensen, 1983).

7. "The overfall type has the advantage of being attractive to the fish," (McLeod and Nemenyi, 1940).

From our research, it is apparent that we are on the right track. This has been a constant source of encouragement. The studies completed for Year 2 provided valuable information for refinement of the waterfall weir fishway.

General Structural Considerations

To insure that a structure is appropriate for more than a specific application it must be developed with consideration for the range of expected site conditions. For a fishway, these include remote sites with variable field conditions as well as the controlled environment of a dam. Because of the lack of control, applications at remote sites are more difficult and should be considered the worst case for design. If remote sites can be accommodated, applications at dams should prove easy.

To develop a fishway structure for widespread application at remote sites, versatility and economics must be at the forefront of thought. Versatility is required so that the structure can be fitted to variable topography. Minimizing the cost of the structure is important so that a greater number of sites can be justified economically for its application. For the waterfall weir fishway, modular construction satisfies both of these criteria.

The advantages of modular construction are many: 1) it allows the fishway to be designed using standard components of known hydraulic performance, 2) components can be prefabricated and flown into remote sites, 3) components can be assembled on site with a minimum of time and manpower, 4) off-site fabrication provides versatility in material selection (e.g., fiberglass, aluminum, steel), 5) components can be easily repaired or replaced (e.g., welded, patched), 6) a minimum of foundation preparation is required, and 7) components can be designed to be assembled in versatile configurations (Fig. 17). The net effect is adaptability to variable site conditions and minimal engineering, construction, and maintenance costs. -Resource managers will be able to mitigate more obstructions to the migration of anadromous fish than before for the same capital investment.

Final Weir and Pool Design

The final weir and pool fishladder design was developed from the preliminary laboratory work described in this appendix coupled with the field work at Johns Creek hatchery (Aaserude and Orsborn, 1985). The final design is summarized in Fig. 18, and is discussed in more detail in Report Number 1 of 4 for this project series (Orsborn, 1985).

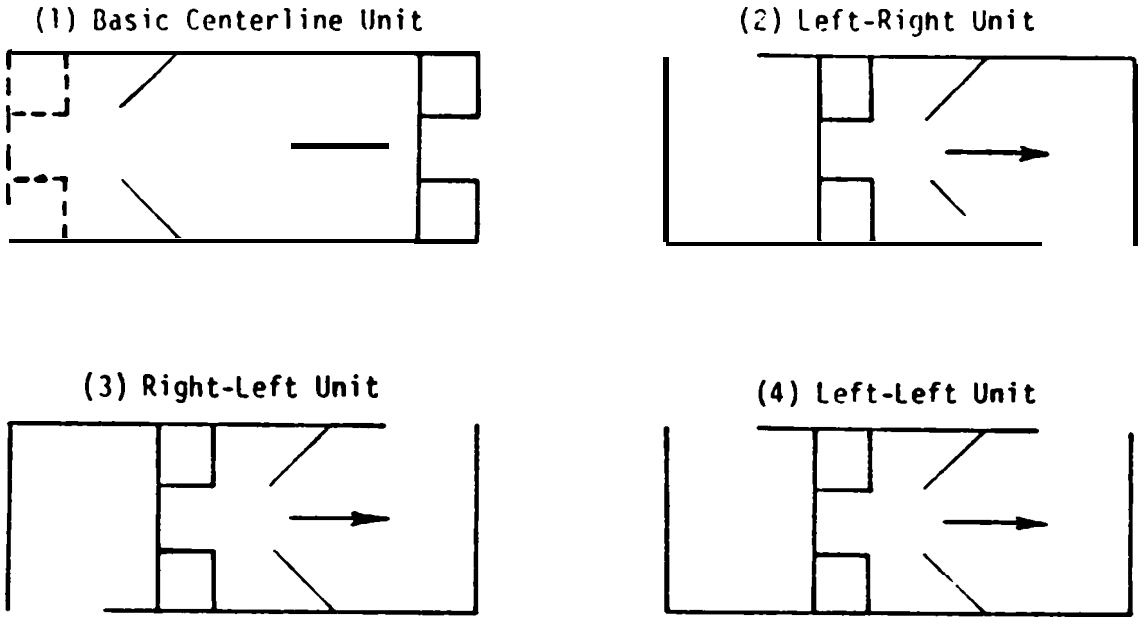

(a) Basic Unit Chamber and Variations--- Designations Relate Inlet and Outlet Location to Direction of Flow Through the Units....

(b) Some Possible Unit Arrangements

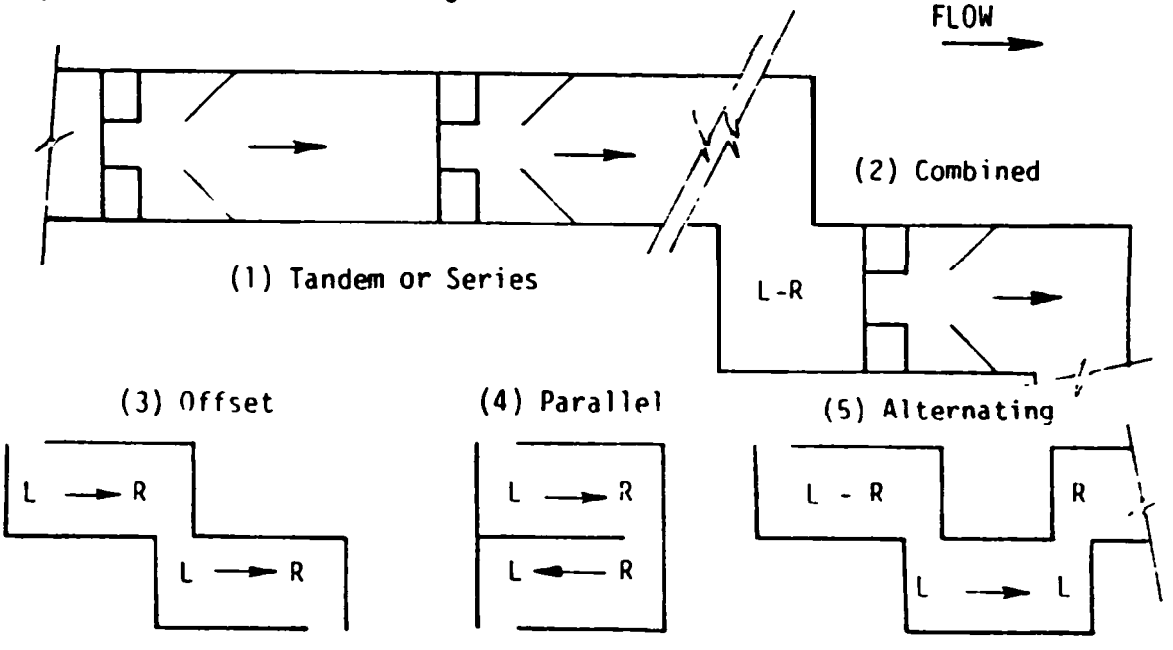

Figure 17--Plan view of possible configurations using standard modular components

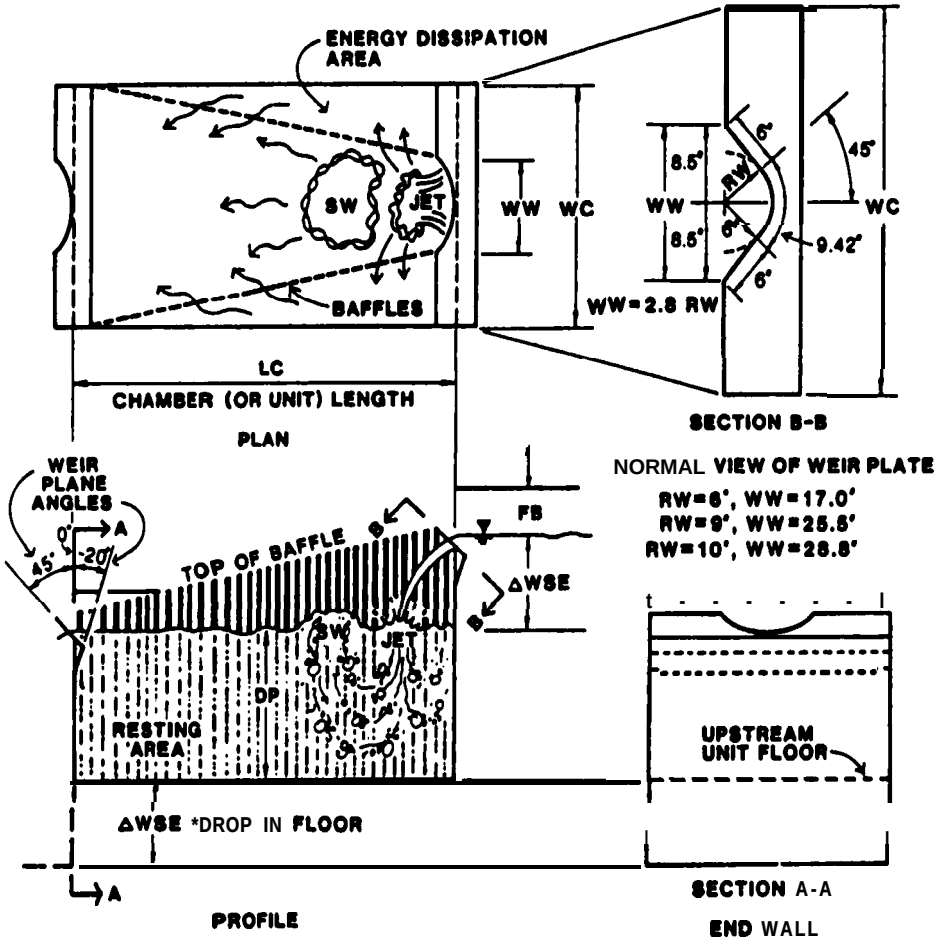

NOMENCLATURE FOR NEW WE

DP . Depth of *Pool*
FB . Freeboard
LC . Chamber Length
RW - Radius of Weir

CRITERIA FOR DESIGN

- Slotted baffles at 50% opening; 1" x
- Leave 1-ft. square opening at botto fish exit in case they fell behind ba
- Perforated plate baffles with round
- For baffle arrangement shown, ch minimized.
- Baffles make flow uniform, dissip downstream, end guide fish to jump fr
- Vertical weir angle 9 . 45° works b if not covered by baffles; 0° O.K. cling to well.
- For weirs shown, range of operatin how anxious to move the fish are.
- Will operate at higher *flows* (10 baffles.
- Flared weir gives better clearan range, and better Jet shape then semic
- Water Surface Drops (ΔWSE) tested up
- Weir Width (WW) should not be greater
- Length (LC) to Width (WC) Ratio a ladder for resident trout.

Fig, 18. Recommended geometry for new weir and pool fishladder.

REFERENCES FOR APPENDIX II

Aaserude, R.G., "Waterfall Weir Energy Dissipation Study--Summary Report," unpublished paper in Quarterly Progress Report for December, 1982-February, 1983, BPA Project DE-AI79-82BP36526, Fishladder Development, Albrook Hydraulics Laboratory, Washington State University (1983).

Aaserude, R.G. and J.F. Orsborn, "New Concepts in Fishladder Design," Part 2 of 4 of a BPA Fisheries Project, No. 82-14, Department of New Concepts in Fishladder Design, August 1985.

Bakke, Bill M., Director, Trout and Salmon Resource Center, Portland, Oregon, letter dated May 25, to Dr. John F. Orsborn and Dr. Walter Mih, Department of Civil and Environmental Engineering, Washington State University, Pullman, Washington (1983).

Bell, Milo C., "Fisheries Handbook of Engineering Requirements and Biological Criteria," Fish. Engr. Res. Prog., Corps of Engineers, Portland, Oregon, (1973).

Evensen, John C., Past President of Steelhead Trout Club of Washington, letter dated April 9 to Dr.John F. Orsborn and Dr. Walter C.Mih, Department of Civil and Environmental Engineering, Washington State University, Pullman, Washington (1983).

McLeod, A.M. and Paul Nemenyi, "An Investigation of Fishways," University of Iowa Studies in Engineering, Bulletin 24, 63 p. (1940).

Sedgwick, S. Drummond, Consultant to the Scotland Hydroelectric Board, letter dated February 16 to John F. Orsborn, P.E., Department of Civil and Environmental Engineering, Washington State University, Pullman, Washington (1983).

Stuart, T.A., "The Leaping Behavior of Salmon and Trout at Falls and Obstructions," Department of Agriculture and Fish for Scotland, Freshwater and Salmon Fisheries Research, Her Majesty's Stationery Office, Edinburgh, No. 28, 46 p, (1962).

Webster, Dwight A., "Leaping Rainbows of the Finger Lakes," Information Leaflet, N.Y. State Conservation Department, Division of Conservation Education, 4 p. (1965).

Weihs, D, "Energetic Advantages of Burst Swimming of Fish," Journal of Theoretical Biology 48, 215-229 (1974).