UNITED STATES DEPARTMENT OF THE INTERIOR

FISH AND WILDLIFE SERVICE

ANADRUMOUS FISH PRODUCTION FACILITY STUDY

ON THE

UMATILLA INDIAN RESERVATION

R. Kahler Martinson

Regional Director

Cover Photo by:
Mr. David W. Quaempts
Umatilla Indian Tribe

ANADROMOUS FISH PRODUCTION FACILITY STUDY

ON THE UMATILLA INDIAN RESERVATION

TABLE OF CONTENTS

	Page
INTRODUCTION	1
SITE CRITERIA	1
HATCHERY SITE INVESTIGATIONS	2
Surface Waters Investigated	2
Spring Waters Investigated	2
Water Quality Analysis	4
Water Quantity	6
Climatological Data	6
Soils	6
Site Recommendations	7
MINTHORN SPRINGS HATCHERY SITE DEVELOPMENT	7
Site Development	7
Hatchery Production	7
Proposed Facilities	8
BONIFER SPRINGS HATCHERY SITE DEVELOPMENT	10
Site Development	10
Hatchery Production	10
Proposed Facilities	11
OPERATIONS	13
COSTS	14
Hatchery Construction Costs	14
Hatchery Operation and Maintenance Costs	15
SPECIAL HABITAT PROBLEMS ON THE UMATILLA RIVER TO BE CONSIDERED PRIOR TO ANADROMOUS FISH PRODUCTION DEVELOPMENT	16
CONCLUSION	19

EXHIBITS

Exhibit #1A	Location Map, Minthorn Springs Site
1B	Location Map, Bonifer Springs Site
1C	Location Map, Thorn Hollow Site
Exhibit #2A	Minthorn Springs Water Analysis
2B	Bonifer Springs #1 Water Analysis
2C	Bonifer Springs #2 Water Analysis
2D	Bonifer Springs #3 Water Analysis
2E	Thorn Hollow Springs Water Analysis
Exhibit #3A	Minthorn Springs Thermograph Chart Summary
3B	Bonifer Spring #1 Thermograph Chart Summary
3C	Bonifer Spring #2 Thermograph Chart Summary
3D	Bonifer Spring #3 Thermograph Chart Summary
3E	Thorn Hollow Springs Thermograph Chart Summary
Exhibit #4	Climatological Data
Exhibit #5	Land Status Report, Umatilla Reservation Hatchery Sites
Exhibit #6A	Construction Drawings, Minthorn Springs Site
6B	Construction Drawings, Bonifer Springs Site
Exhibit #7A	Construction Specifications, Minthorn Springs Site
7B	Construction Specifications, Bonifer Springs Site
Exhibit #8A	Engineering Construction Cost Estimate, Minthorn Springs Site
8B	Engineering Construction Cost Estimate, Bonifer Springs Site

ANADROMOUS FISH PRODUCTION FACILITY STUDY

ON THE UMATILLA INDIAN RESERVATION

INTRODUCTION

During FY-78 and FY-79 the Fisheries Assistance Office, Vancouver, of the U.S. Fish and Wildlife Service, conducted an Anadromous Fish Enhancement Study on the Umatilla Indian Reservation on behalf of the Confederated Tribes of the Umatilla Indian Reservation. Engineering for the study was provided by the Fish and Wildlife Service Engineering Branch in Portland, Oregon. This was a cooperative study with the Columbia River Inter-Tribal Fish Commission, and was funded by the Bonneville Power Administration. The purpose of the study was to determine the best potential sites for developing anadromous fish production facilities on the Umatilla Indian Reservation. This is part of an overall study to determine the feasibility of developing or enhancing the anadromous fish production on the Reservation.

The number of anadromous fish returning to the Columbia River has been drastically reduced in recent years as a result of the combined impacts of construction and operation of mainstem dams, loss or degradation of spawning habitat, and increasing sport and commercial fisheries. These reduced runs have had a severe social and economic impact on the Umatilla Indian Tribe. The Tribe has placed high priority on restoration of runs to combat the declining trends, and to re-establish significant tribal fisheries.

Evaluation of data collected during this study indicated that three sites for fish production facilities exist on the Umatilla Indian Reservation.

SITE CRITERIA

1 The site must have a dependable water supply of adequate quality, volume, and temperature; and must not contain toxic materials or pollutants. The water supply transportation distance should be minimized to feasible costs limits. A gravity water supply is most economical, although pumping auxiliary surface or ground water to augment quantity or adjust quality is practical in some instances.

2. The site should have a dependable water avenue, downstream from-its location, for the return of brood stock to assure a perpetual egg supply The stream should be free of pollution and other obstacles which would. hamper migration of adultsalmon and steelhead trout to the hatchery.

3. The site must have sufficient acreage for construction of the physical facilities included in a hatchery development. The terrain and foundation material should be such that cost of site preparation is minimized; and the site, when developed, should be protected from flooding.

4. The site must have year-round vehicle access for delivery of fish food, supplies, and transportation of personnel.

HATCHERY SITE INVESTIGATIONS

Preliminary investigations began in May 1978, and were confined to waters within the boundaries of the Umatilla Indian Reservation. Many water sources were initially examined; however, all but three were dropped from further consideration.

Surface Waters Investigated

The Umatilla River, Meacham Creek and Upper McKay Creek are the only perennial streams located within the Reservation boundaries. These waters were investigated within the study area and found to have undesirable characteristics. The Umatilla River and Meacham Creek exhibit a wide range of temperatures, with extremes beyond compatible fish rearing conditions. Eight miles of Upper McKay Creek are located on the Reservation, but are blocked at the lower end by McKay Dam. Discharge from the reservoir is controlled for irrigation purposes, and water is released only four to five months per year. Upper McKay Creek shows large fluctuations in flow and would not be dependable for a fish production facility.

All three of these water sources were dropped from further consideration.

Spring Waters Investigated

Three spring water sites were identified on the Reservation. Each appeared to have good rearing potential and they were monitored for one year.

1. Minthorn Springs Site (Figure 1) is located adjacent to the Umatilla River (Exhibit lA), at River Mile 65.4. The springs originate primarily at two locations in a heavily vegetated area, and form a small stream which flows approximately l/4 mile to the study site. Beyond the study site, the stream flows another l/4 mile before its confluence with the Umatilla River. In addition to the two primary springs, seven more contributing springs enter upstream from the site and three more enter downstream.

The site was utilized by the Tribe for fish rearing in 1967. A small concrete dam provided head to four gravel incubation boxes used to incubate coho salmon eggs. The facility was destroyed by a flood, and there has been no development since. The Tribe acquired, and still has, a right-of-way from the private owners for the purpose of rearing fish. The right-of-way is located on both sides of the stream, extending 20 feet per side.

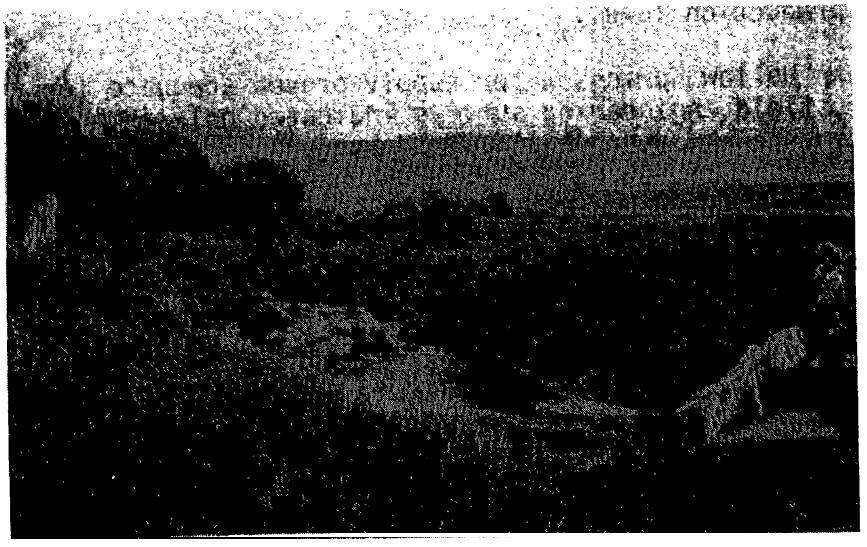

Figure 1. Minthorn Springs

2. The Bonifer Springs Site (Figure 2) is located on Meacham Creek 1.5 miles upstream from its confluence with the Umatilla River (Exhibit lB), at River Mile 80.9. Currently at the site there is a one-acre pond fed by three springs. Two of the springs originate on private land, and the other on Union Pacific Railroad land. The site is located within the Reservation boundary, but is privately owned.

3. Thorn Hollow Springs Site (Figure 3) is a privately owned fish farm located on the Reservation. The site consists of four earthen ponds, located in a sequential pattern, with the water source being three springs originating within 100 feet of the first pond. After the water leaves the last pond, it flows 100 yards prior to its confluence with the Umatilla River (Exhibit lC), at River Mile 73.3.

The smallest of the ponds is being used by the present land owner to raise a small number rainbow trout. Due to flood damage that occurred in 1975, renovation of flood control dikes, spring development, and pond renovation would be necessary before the private owner can operate at a higher production level.

The Thorn Hollow Springs water supply proved adequate for fish rearing. However, field engineering surveys indicated only a minor difference in elevation occurs, and pumping would be mandatory to operate a fish production facility. Due to the high costs associated with pumping and small amount of water available (average-.45 cfs), this site is not recommended at this time.

Water Quality Analysis

Complete water chemistry analysis was conducted twice at each of the following: Minthorn Springs (Exhibit 2A); Bonifer Springs #l, #2, #3 (Exhibits 2B, 2C, and 2D, respectively); and Thorn Hollow Springs (Exhibit 2E

Results of the analysis for all water sources sampled indicated the water to be-within the compatible range for fish rearing. Some of the parameters tested approached the tolerance levels for anadromous fish, but these parameters could be buffered by simple facility alterations. High filterable residue values in Minthorn Springs could be avoided by transporting the water to the facility through a pipe. Bonifer Springs showed low pH, low 0^2 intermittently low total dissolved gas, and high CO_2 quantities. By aeration of the water prior to rearing, these levels could be altered to a more compatible level. The zinc level in Bonifer Spring #3 is high, but any effects of the zinc would be buffered by the dilution from the other two springs, aeration and calcium carbonate present in the water.

Temperatures at both Minthorn (Exhibit 3A) and Bonifer Springs (Exhibits 3B, 3C, and 3D) are within compatible ranges. Thorn Hollow temperatures (Exhibit 3E) approached allowable extremes at both high and low ranges.

Figure 2 Bonifer Springs

Figure 3 Thorn Hollow Springs

Water Quantity

Water-quantity analysis was conducted throughout the year at the sites by the use of staff gauges and actual measurements.

Below is the estimated water available, by month for the two sites.

Available Flow-Cubic Feet/Second

Month	Minthorn Springs	Bonifer Springs
May	3.0	2.2
June	1.3	2.0
July	1.4	1.8
August	1.4	1.5
September	1.8	1.5
October	2.0	1.7
November	1.3	1.5
December	5.4*	2.0
January	2.4	1.9
February	3.2	2.2
March	7.4*	2.4
April	4.4	2.4

*Surface water included

Climatological Data

Climatological data from the U.S. Weather Service is available for Pendleton, Oregon, (Exhibit 4) the nearest reporting station to the two sites. The data are valid as presented for the Minthorn Springs Site, but some differences can be expected at the Bonifer Springs Site. Due to altitude and terrain differences between Bonifer Springs and the reporting station, it is estimated that daytime high temperatures will be 10 degrees lower than Pendleton. The daily low temperatures are also expected to be 10 degrees lower at the site, with extreme lows running as much as 20 degrees lower than Pendleton.

Annual precipitation at Minthorn Springs is expected to be the same as that at Pendleton, while the annual precipitation at Bonifer Springs is expected to be slightly higher. Most of the difference is expected to occur as snowfall.

Soils

Although no subsurface investigations were made, visual inspection indicates that both sites have a silty-sand and gravel material at the surface. The surface material at both sites appears to have been deposited from old stream flows and is expected to be several feet deep. This would be a satisfactory foundation material for the planned structures.

One problem may occur at the Minthorn Springs Site. After construction, the settling pond may prove to be too porous and not seal in the first years of operation. If this occurs, the application of bentonite or similar material would be required.

Site Recommendations

Upon evaluation of the data and associated operating costs developed during this study, Minthorn Springs and Bonifer Springs Sites are the areas most economically feasible for fish production facilities on the Reservation.

MINTHORN SPRINGS HATCHERY SITE DEVELOPMENT

Site Development

The hatchery site is located on private land (Exhibit 5, Land Status Report) along the bank of the Umatilla River at River Mile 65.4, in Section 7 of Township 2N and Range 34E at a mean sea level elevation of 1,320 feet. The site is located approximately six miles east of Pendleton, Oregon. Access to the site is by Umatilla County Road 900, and approximately l/4 mile of private road mostly unimproved. Acquisition of a right-of-way for the access road would be required. The new access would require very little grading, with most of the expense in the gravel surfacing since it follows an existing track. A culvert with fill material must be installed to allow vehicles to cross a small ditch. A right-of-way would also be required along the stream from the site to the Umatilla River to maintain suitable passage for migrating fish.

Cattle presently using this area for grazing, would have to be relocated to another area. A Water allotment for cattle use may need to be worked out with local farmers. Also four beaver dams in the stream below the site would have to be removed to assure up and downstream movement of fish.

The Minthorn Springs Site is subject to frequent (if not annual) flooding from the Umatilla River during the spring runoff. Specific flood elevation data are not available for the adjacent stretch of the river. An inspection indicated that site inundation occurs from Umatilla River overflow to the northeast of the springs and follows the lower elevations onto the site. Construction of a dike would block this flow and prevent future flooding.

A trap for returning adults could be installed in the outlet channel immediately above its confluence with the Umatilla River.

Hatchery Production

Minthorn Site development is restricted by the quantity of water available and the limited hydraulic head. The production levels provided are based upon the entire available flow, and a single-pass facility. Depending on the desired species, this facility would be capable of producing the numbers and pounds of salmonids listed in the following

table. Production figures are for a single species only, and are not to be considered cumulative.

Minthorn Springs Site	Steel head	Spring Chinook	Fall Chinook	Coho
Number of adults required	120	45	38	58
Survival to spawn	80%	80%	959'	80%
Number adult spawning	96	36	36	46
Percent females	50%	50%	50%	50%
Number females	48	18	18	23
Number eggs per female	4,000	4,000	5,000	3,000
Number of eggs	190,400	69,900	92,100	70,000
Survival, eggs to smolts	50%	70%	70%	70%
Number of smolts liberated	95,209	48,900	64,460	49,000
Number per pound at liberation	7.3(7.3")	4.1(9.3")	9.4(7.1")	6.3(7.8")
Number of pounds at liberation	13,040	12,000	6,900	7,800
Survival smolts to adults	2%	2%	.05%	1%
Number of returning adults	1,908	978	32	499
Approximate egg take date	April l-30	Sept. l-30	Oct. l-31	Nov. l-30
Approximate months rearing	10	15	9	11
Approximate release date	May 1	March 1	Nov. 30	March 1

Proposed Facilities

1. Water collection, supply, distribution and drain system.

2. Adult fish barrier with trap and combination adult holding pond and spawning facility.

   Criteria for adult holding and fish rearing facilties:

   a. For adult holding, 10 cubic feet of water per adult chinook and 4 cubic feet for coho and steelhead will be required.

   b. Minimum water depth for adult holding should be 4 feet, and 4 feet of water depth will also be required for fish rearing.

   c. Three water changes per hour for adult holding and 1.6 water changes per hour for fish rearing will be required.

   d. Suggested adult holding pond dimensions are 12' wide x 30' long x 5.5' high.

3. Two baffled incubation troughs 2' wide x 1.5' high x 16' long,

4. Three circular rearing ponds 24' diameter x 5' depth with external standpipes.

5. Feed Storage Facility with a 40,000 lb. capacity. Fish food required for annual operation for both this site and Bonifer Site could be stored on site or at the Tribal Headquarters.

6. Settlement pond (Z-hour detention time) for pond cleaning wastes only. Earthen Pond 28' x 120' x 6' and water depth of 2'. Sized for 5 pond cleanings per week per pond and 3 ponds cleaned per hour.

Buildings

1. Hatchery building which includes:

   a. Fish Food Storage
   b Equipment and miscellaneous storage
   c: Staff Room with lavatory
   d. Space for hatching troughs

Other

1. Gravel access road (one bridge may be required)

2. Vehicle Parking areas

3. Domestic Water

4. Storm Drainage

5. Fencing

6. Miscellaneous equipment including freezer, tools and a small flatbed truck for transferring fish and fish food (with a removable fish distribution box).

Optional Construction

1. Residential housing one trailer pad.

2. Automatic feeders.

3. Monitor and alarm systems for fish facility operations.

4. Sewage Systems.

5. Electrical Service.

6. Telephone Service,

The inclusion of future residential housing and restroom facilities in the hatchery buildings makes development of potable water and domestic sewage systems essential. On-site underground sewage disposal using conventional septic tanks and drainfields is feasible at the Minthorn Springs location. The spring water flows would be suitable for potable use, with the addition of a chlorinator, booster pump, and contact tank since the required flow for domestic use would be only about 400 gallons/ day maximum.

Electricity is available within l/2 mile of site, however, hatchery facilities have been planned to permit fish-rearing operations without the need of electric power. Electrical service is on the list for future construction and consequently, so is the potable water system. Drinking water needs can be met in the interim in several ways, such as personnel bringing in their requirements daily. A chemical toilet will be needed until the domestic water system is completed.

Construction drawings and specifications are presented in Exhibits 6A and 7A respectively.

8ONIFER SPRINGS HATCHERY SITE DEVELOPMENT

Site Development

The site is located on private land (Exhibit 5, Land Status Report) along the bank of Meacham Creek 1.5 miles upstream from its confluence with the Umatilla River at River Mile 80.9 in Section 6, Township 2N, Range 34E. The site is approximately 21 miles east of Pendleton, Oregon, with main access by Umatilla County Road 900. The last two miles of access to the site are by a gravel road owned by the Union Pacific Railroad Company. A railroad crossing and fill or a small bridge would be required for vehicle access to the site. The Union Pacific service road, though not the only access to the site, is by far the most desirable, since the route is the most direct and the grade is ideal. The Tribe would have to secure a joint-use agreement from the Union Pacific Railroad. In addition, the agreement should include provisions for use of the road by hatchery construction contractors. It is anticipated that the railroad will require that Union Pacific do the engineering and construction of the crossing adjacent to the site with Tribal funds. An amount is included in the Engineering Cost Estimate for this purpose.

The Bonifer Springs area shows no signs of any flooding. The site is completely protected by a railroad berm along Meacham Creek, and adequate surface drainage structures exist to handle any runoff.

A trap for returning adults could be installed in the outlet channel immediately above its confluence with Meacham Creek.

Hatchery Production

The production levels provided are based upon the entire available flow and a single-pass facility. Depending on the desired species, this fish hatchery would be capable of producing the salmonid outputs listed in the following table. Production figures are for a single species only and are not to be considered cumulative.

Bonifer Springs Site	Steelhead	Spring Chinook	Fall Chinook	Coho
Number of adults required	183	63	61	110
Survival to spawn	80%	80%	95%	80%
Number adult spawning	146	50	58	88
Percent females	50%	50%	50%	50%
Number females	73	25	29	44
Number eggs per female	4,000	4,000	5,000	3,000
Number of eggs	292,000	99,100	143,200	133,300
Survival, eggs to smolts	50%	70%	70%	70%
Number of smolts liberated	146,000	69,400	100,210	93,300
Number per pound at liberation	11.2(6.3")	5.8(8.3")	15.1(6.1")	9.8(6.6")
Number of pounds at liberation	13,030	12,000	6,640	9,520
Survival smolts to adults	2%	2%	.05%	1%
Number of returning adults	2,928	1,388	50	933
Approximate egg take date	April l-30	Sept. l-30	Oct. l-31	Nov. l-30
Approximate months rearing	10	16	9	10
Approximate release date	May 10	April 20	Nov. 30	March 1

Proposed Facilities

Fish production facilities needed would include the following:

1. Water collection, supply, distribution and drain system.

2. Adult fish barrier with trap and combination adult pond and spawning facility.

   Criteria for adult holding and fish rearing facilities:

   a. For adult holding, 10 cubic feet of water per adult chinook and 4 cubic feet of water for coho and steelhead would be required.

   b. Minimum water depth for adult holding should be 4 feet, and 4 feet of water depth would also be required for juvenile fish rearing.

   c. Three water changes per hour for adult holding and 1.3 water changes per hour for fish rearing would be required.

   d. Suggested adult holding pond dimensions are 12' wide x 30' long x 5.5' high.

3. Two baffled incubation troughs 2' wide x 1.5' high x 16' long.

4. Four circular rearing ponds 24' diameter x 5' depth with external standpipes

5. Feed storage facility 40,000 lb. capacity. Fish food required for annual operation for both this site and Minthorn Site could be stored on site or at the Tribal Headquarters.

6. Settlement pond (2-hour detention time) for pond cleaning wastes only. Earthen pond with at least 9,600 cubic feet capacity. Sized for 5 pond cleanings per week per pond and 4 ponds cleaned per hour.

Buildings

1. Hatchery building which includes:

   a. Fish food storage
   b Equipment and miscellaneous storage
   c: Staff room
   d. Lavatory

Other

1. Gravel access road (one bridge may be required)

2. Vehicle Parking areas

3. Domestic Water

4. Storm Drainage

5. Fencing

6. Miscellaneous equipment including freezer, tools and a small flatbed truck for transferring fish and fish food (with removable fish distribution box).

Optional Construction

1. Residential housing one trailer pad.

2. Automatic feeders.

3 Monitor and alarm systems for fish facility operations.

4. Sewage Systems.

5. Electrical Service

6. Telephone Service.

As with the Minthorn Spring facility, the inclusion of future residential housing and restroom facilities in the hatchery building makes development of potable water and domestic sewage systems essential. On-site

domestic sewage disposal is impossible due to the proximity of surface water. The only feasible solution appears to be the use of sewage holding tanks. The spring water flows would be suitable for potable use with the addition OS a chlorinator, booster pump and contact tank since the required flow for domestic use would be only about 400 gallon/day maximum.

Electricity is available within 100 yards of site, however, hatchery facilities have been planned to permit fish-rearing operations without the need of electrical power. Electrical service is on the list for future construction, and consequently, so is the potable water system. Drinking water needs can be met in the interim in several ways, such as personnel bringing in their requirements daily. Since potable water is not required for toilet operation and there is sufficient head available, a temporary water connection is planned.

Construction drawings and specifications are presented in Exhibit 6B and 7B respectively.

OPERATIONS

Since the combined production of these two sites is relatively small, it is recommended they be considered as a complex. If the Tribe desires to increase the production above the potential of these water supplies (and pay the extra expenses of pumping), additional water might be obtainable from wells at both sites. Production could be increased substantially if sufficient water was obtained from wells during the limiting months. The Tribe may want to conduct ground-water exploration at both sites prior to any construction. To increase production, pumping at these two sites would be more feasible than developing the Thorn Hollow Site.

Minthorn Springs and Bonifer Springs could be developed in two stages. One site could be built and operated first with the other constructed at a later date. This would allow the Tribe to get into immediate production at one. site and gain experience in hatchery operation. The initial hatchery design could be tested, and any improvements found necessary, incorporated into the design of the second facility.

To operate the complex, one manager and two assistants (one at each facility) would be required. The manager must have some training in fish culture. Temporary help may be required at distribution and/or spawning time. If qualified individuals are available, the positions should be filled by Tribal members.

The objective of the complex would be to produce salmon and/or steelhead to partially fulfill the Tribe's fishery management program for the Umatilla River. The annual hatchery production for. the complex should approach 26,OOO pounds as identified in the production tables.

The production tables were calculated with the maximum poundage each facility would be capable of producing for each individual species. The final decision as to what species would be raised at the hatchery, rests with the Umatilla Tribe. Due to the limited amount of water available

and relatively low production releases possible, the single species approach might be the most advantageous approach for the operator to undertake.

From a production standpoint, steelhead and/or spring chinook appear to be the best suited for this type of facility. Both these species would have the best return rate to the Umatilla River. Fall chinook on the other hand, would not be self-sufficient since fewer adults would be expected to return to the facility than are needed for brood stock.

Initially there would probably not be sufficient numbers of brood fish entering the Umatilla River to furnish eggs for the hatchery program. Consequently, eggs would have to be obtained from mature fish entering adjacent streams, or from other hatcheries. After the first full production cycle, it is expected the hatchery could be self-supporting.

COSTS

Hatchery Construction Costs

A few explanatory remarks should be made that are pertinent to both locations. First, the construction of the facilities has been organized into Phase 1, Phase 2, and Optional Future Construction categories, to provide flexibility in fund allocation. Phase 1 items are the "barebones" minimums necessary before fish production can be started. Phase 2 items are those remaining that are deemed essential for satisfactory continuous fish production. Optional future construction items are those desirable at a later date but not essential for operations. Plans and specifications have been prepared for both Phase 1 and Phase 2.

All costs have been prepared for construction during the remainder of 1980. For any construction of items started in 1981, the amounts should be increased by an additional 12%. Additional increases to reflect expected inflation rates should be made for subsequent years. cost estimates for Phase 1 and Phase 2 and Optional Future Construction are provided for Minthorn Springs and Bonifer Springs facilities in Exhibit 8A and B respectively.

Equipment costs for each facility are also listed in Exhibits 8A and B. These are for items that are expected to have a life expectancy of more than 1 year. Not included in these figures, is the initial purchase cost of a truck and small (2,000 lbs. capacity) fork lift. It is believed that one vehicle and fork lift could serve both stations. This would require the availability of another truck from time to time during periods of repair and maintenance. For the total initial costs, an additional $l0,000.00 should be added for acquisition of the truck, and $9,000.00 for the fork lift.

The total cost (based upon 1980 figures), for full development including optional construction is as follows:

Minthorn Springs	$ 673,760.OO
Bonifer Springs	796,845.OO
Shared Equipment	19,000.00
	$1,489,605.00

Operations and Maintenance Costs

Steelhead was considered in estimating operation costs since production of this species would result in the greatest number of pounds of smolts released. Local conditions may require adjustment in the salaries paid in order to obtain and retain qualified personnel. The figures are based on expected increases in cost of living and are presented for the calendar year of 1981.

The following expenses are expected to be shared should both stations be developed:

Item		1 Station	Both Stations
1. Personnel:	Manager	24,200.00	24,200.00
2.	Technician (17,500 ea.)	17,500.00	35,000.00
3.	Clerical (part-time)	1,700.00	2,700.00
4.	Laborer (part-time)	8,000.00	14,100.00
5.	Fringe benefits (10%)	5,200.00	7.600.00
6. Truck expense:	operation	4,500.00	7,500.00
7.	amortization	4,000.00	4,000.00
8. Fork Lift:	amortization	3,000.00	3,000.00
	Total	$68,100.00	$98,100.00

The next expense items will vary depending upon the stage of development at either location. The costs presented assume each station is fully developed for the recommended production levels of this study.

Item		Minthorn	Bonifer
1. Fish Feed		$7,800.00	$7,800.00
2. Facility Maintenance		3,500.00	4,000.00
3. Equipment Amortization		1,800.00	1,800.00
4. Supplies		5,000.00	5,000.00
5. Utilities:	sewage-Hatchery Bldg.	300.00	8,000.00
6.	sewage-trailer residence	300.00	4,000.00
7.	electricity	1,000.00	1,000.00
8.	telephone	500.00	500.00
9.	trash disposal	1,000.00	1,000.00
10. Miscellaneous		300.00	300.00
	Total	$21,500.00	$33,400.00

During the first year of operation with only Phase 1 and 2 facilities in place the additional 0 & M costs would be:

Item		Minthorn	Bonifer
1. Fish Feed		$ 7,800.00	$ 7,800.00
2. Equipment Amortization		1,800.00	1,800.00
3. Supplies		4,000.00	4,000.00
4. Utilities:	sewage-Hatchery Bldg.	1,100.00	1,100.00
5.	trash disposal	1,000.00	1,000.00
6.	Miscellaneous	300.00	300.00
	Total	$16,000.00	$22,900.00

For the second and subsequent years with Phase 1 and 2 facilities only in place the additional O & M costs would be:

Item	Minthorn	Bonifer
1. Fish feed	$ 7.800.00	$ 7,800.OO
2. Facility maintenance	2,300.00	2,700.00
3. Equipment amortization	1,800.00	1,800.OO
4. Supplies	4,000.00	4,000.00
5. Utilities: sewage-Hatchery Bldg.	1,100.00	1,100.00
6. trash disposal	1,000.00	1,000.00
7. Miscellaneous	-- 300.00	300.00
Total	$18,300.00	$25,600.00

The above operational and maintenance costs are about twice the costs of existing Federal facilities when reviewed on a cost per pound of fish released basis. The higher cost is to be expected where the water supply precludes greater production.

SPECIAL HABITAT PROBLEMS ON THE UMATILLA RIVER TO BE CONSIDERED PRIOR TO ANADROMOUS FISH PRODUCTION DEVELOPMENT

Any organization planning to invest in a fish production facility in the Umatilla watershed must be aware of the operation of diversion structures on the river and their adverse impact on anadromous salmonids. Construction of irrigation dams and diversion canals on the Umatilla River (beginning in the early 1900's). marked the start of the decline in anadromous fish runs in the river. Summer steelhead are presently the only anadromous species of significance in the system. Now only an occasional coho and chinook are observed.

Juvenile salmonids released on the Umatilla Indian Reservation would have eight irrigation dams on the Umatilla River, and three hydroelectric dams on the Columbia River to pass in their migration to and from the ocean.

Recentobservation indicate that some irrigation dams on the Umatilla River lack fish ladders and/or screens. Stanfield Dam is without a fish ladder; and Stanfield, Maxwell and Brownwell irrigation dams are deficient in diversion canal screens (Figures 4.5 and 6). The lack of proper passage facilities on these structures inhibits adult upstream migration and/or allows juveniles to be diverted into irrigation ditches. The structures should be modified to remedy these problems in order to receive maximum production from any anadromaus fish facility constructed in the basin.

Figure 4. Stanfield Irrigation Diversion Dam

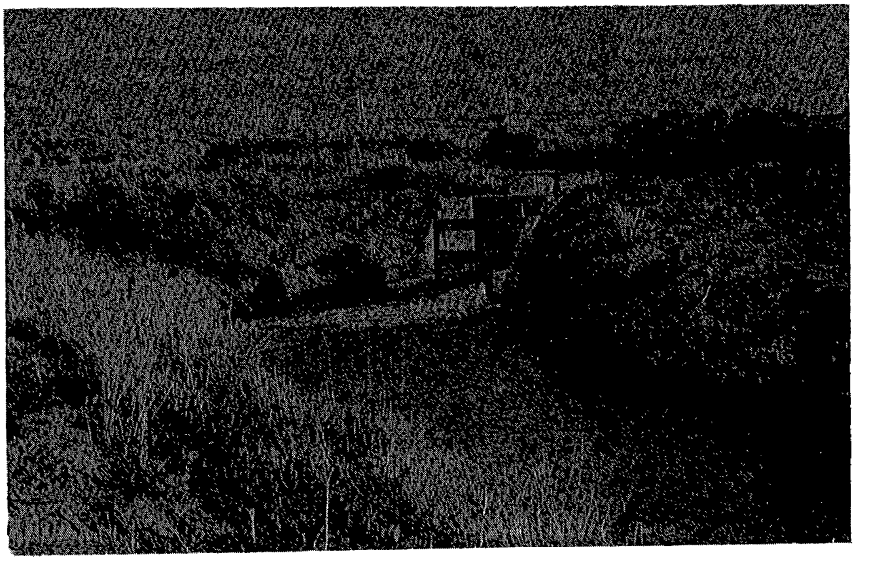

Figure 5. Maxwell Irrigation Diversion Dam

Figure 6. Brownwell Irrigation Dam

Fish passage facilities are very poor at Three Mile Dam (Figure 7), which is on the lower Umatilla River approximately 3 miles upstream from its confluence with the Columbia River. Two ladders were installed on the dam, but only one is presently functional. In addition, the dam is wide and water spills over most of its width creating a series of shallow channels downstream from the dam. The channels then combine to form the main river (Figure 8). Two possible modifications could easily be made to aid fish passage. The dam could be modified by installing a raised lip along the entire crest, except for a section near the left bank. The majority of the flow would then be diverted adjacent to left bank where the functional ladder is located. This attraction water would allow returning fish to more effectively find the ladder. In addition, a deeper water channel on the left side of the river would be created, thus providing better passage conditions for upstream migrants. Secondly, renovation of the channel leading to the fish ladder would enhance the upstream migrants capability to locate the ladder.

The Umatilla River has been overappropriated to the. extent that in most years there is essentially no flow immediately downstream from Three Mile Dam during the irrigation season. Lack of instream flows in this river section, and reduced flows during the irrigation season at other diversion sites, have destroyed the spring and fall chinook runs into the river. Adult steelhead normally migrate upstream during February and March, prior to any major irrigation withdrawals; however, downstream migrants are impacted by low flows and unscreened diversions later in the year.

Structural alterations to the irrigation dams and diversion canals would aid in increasing anadromous fish production in the basin. However, the present main inhibitor is lack of adequate passage water below Three Mile Dam. Until adequate sustained flows can be maintained, alterations to diversion facilities would not maximize even the current potential production level.

CONCLUSION

Of all the potential sites examined on the Umatilla Reservation for developing fish production facilities, Minthorn Springs and Bonifer Springs Sites are the most feasible. These sites have the most reliable water sources that would allow fish production with the least development cost. The detailed engineering designs and specifications for Minthorn Springs and Bonifer Springs presented can be used for bid solicitation prior to construction.

Due to the present passage problems associated with diversion dams, and lack of adequate fish flows in the Umatilla River, it is recommended that both adult and juvenile fish be trucked to and from this complex until these problems are solved. The juveniles would be released below Three Mile Dam and the adults trapped there upon return. Details of trapping the adults should be worked out with the Oregon Department of Fish and Wildlife (ODFW). That agency has an adult fish trap constructed for use at Three Mile Dam, and the Tribe may be able to jointly use this trap. When passage problems are corrected the trapping facilities designed for each of the sites would be installed.

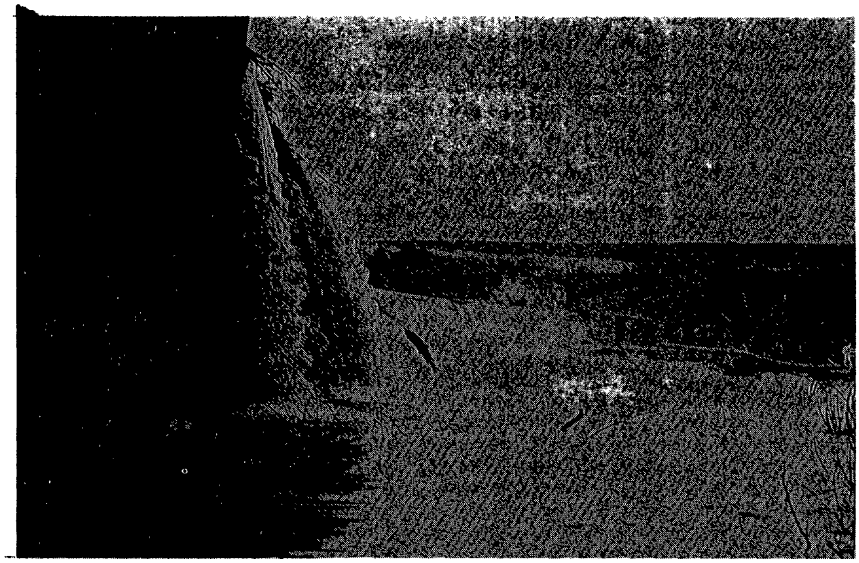

Figure 7. Three Mile Dam. A steelhead jumping at the base of Dam on the side opposite the fish ladder.

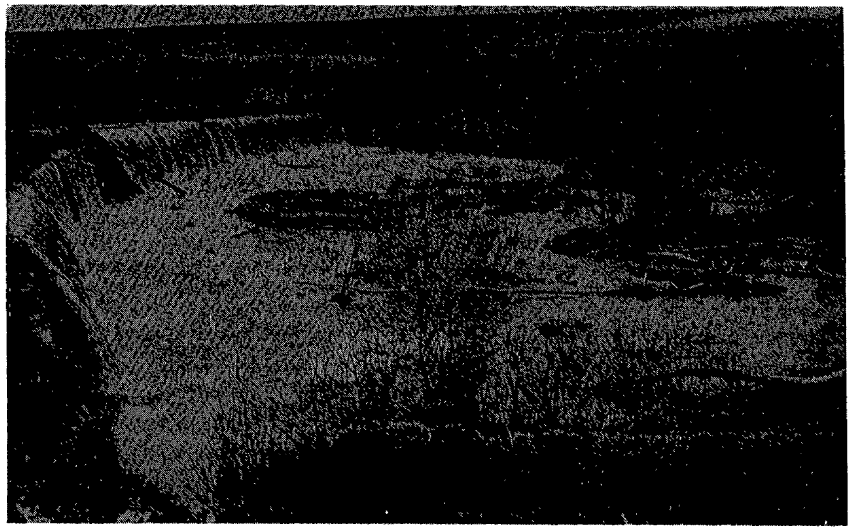

Figure 8. Three Mile Dam. The water spill is over most of the width of the dam. The series of shallow channels can be seen downstream from dam.

The production from these facilities would benefit not only the tribal fishermen on and off Reservation, but also other user groups fishing on stocks of fish originating in the Umatilla River.

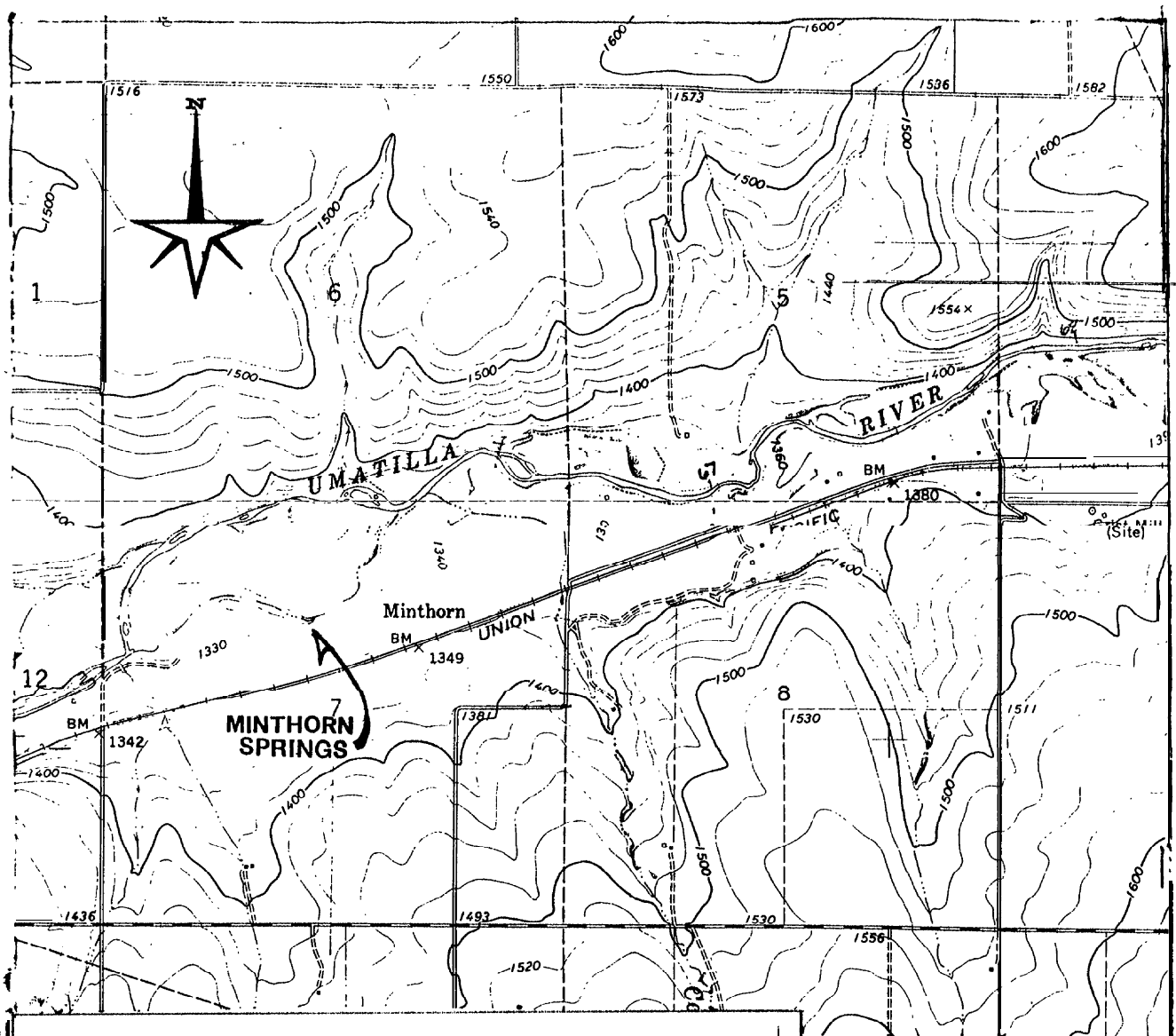

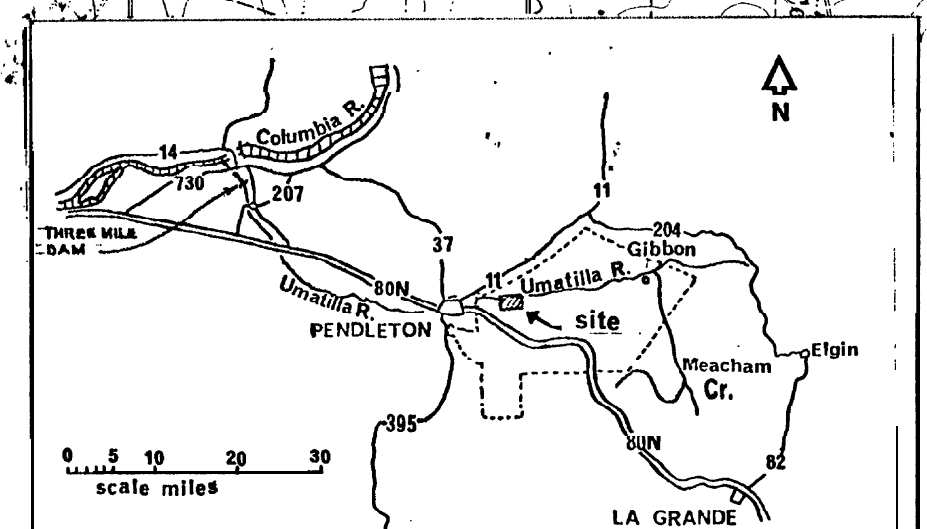

VICINITY MAP

PROPOSED
HATCHERY SITE
MINTHORN SPRINGS
UMATILLA RESERVATION

EXHIBIT 1A

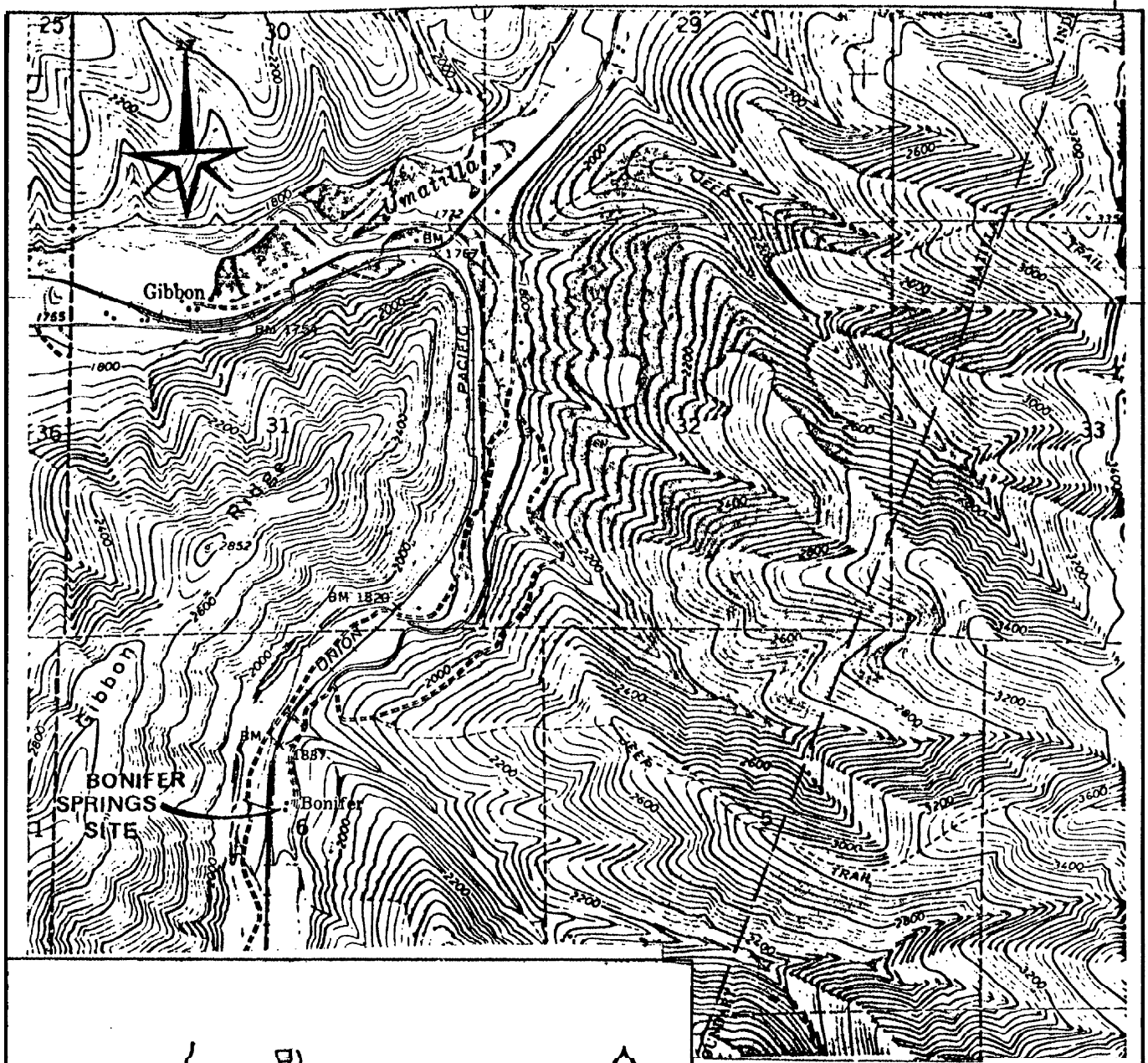

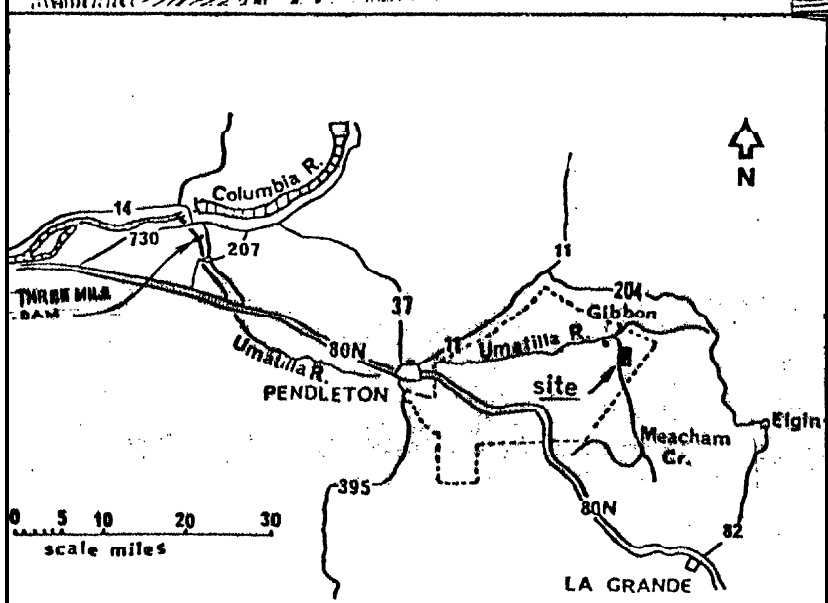

VICINITY MAP

0 5
scale miles

PROPOSED
HATCHERY SITE
BONIFER SPRINGS
UMATILLA RESERVATION

EXHIBIT 1B

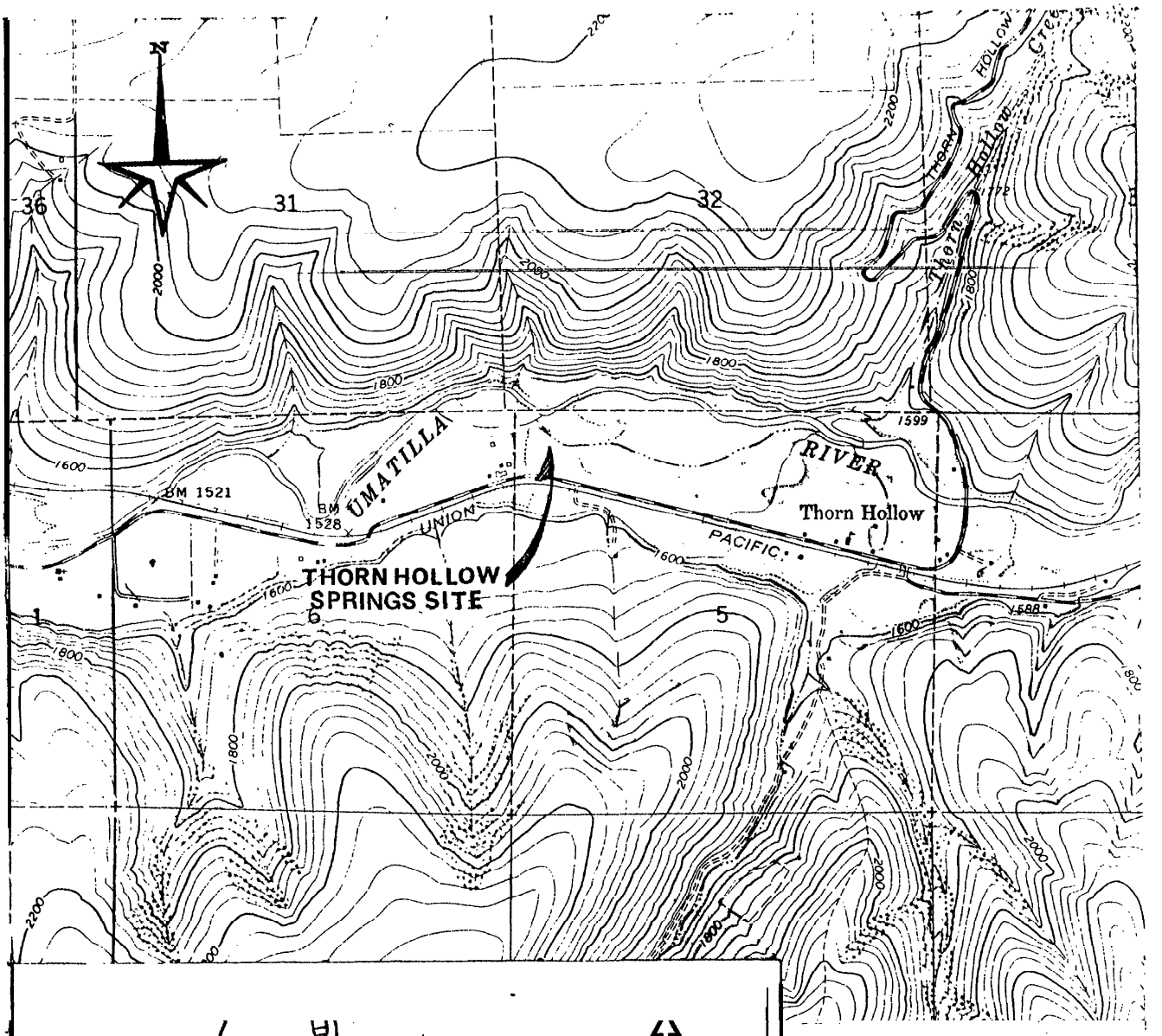

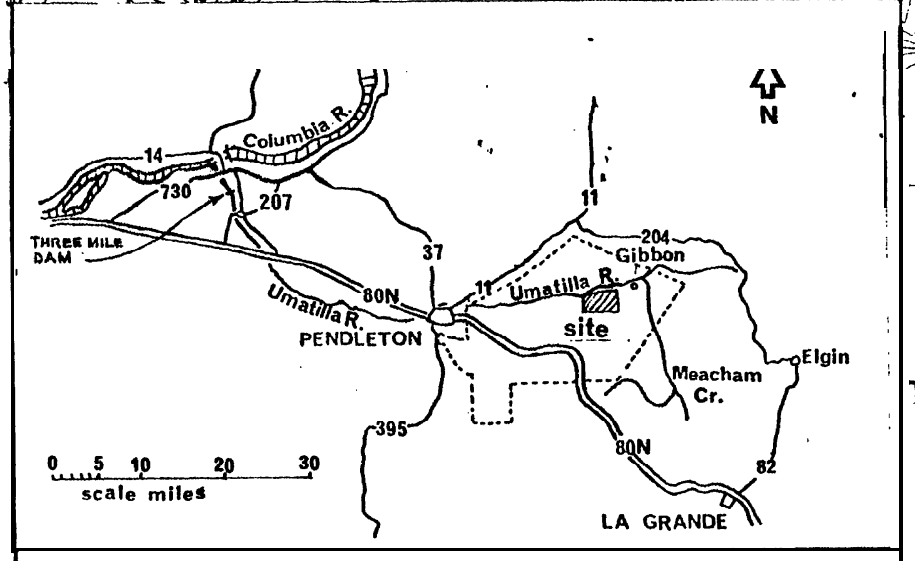

VICINITY MAP

HATCHERY SITE
THORN HOLLOW SPRINGS
UMATILLA RESERVATION

EXHIBIT IC

Water Analysis

Minthorn Springs

	Concentration (parts per million except where otherwise noted)	
	9/19/78	3/5/79
1/Temperature (°F)	52	47
Dissolved O_2	7	10
Dissolved CO_2	5 - 10	0 - 5
Dissolved H_2S	< 0.1	< 0.1
Total Dissolved Gas (%)	96.84	97.96
pH	7.5	7.4
2/Residue, filtrable	179.0	179.0
Residue, nonfiltrable	4.5	12.5
Turbidity (N.T.U.)	5.0	7.0
Total Alkalinity (ph 4.5 as $CaCO_3$)	96.3	57.3
Hardness (calculated as $CaCO_3$)	70.0	61.4
Nitrogen, ammonia	< 0.05	< 0.05
Nitrogen, nitrite	< 0.01	< 0.01
Nitrogen, nitrate	1.64	2.24
Dissolved orthophosphates	< 0.1	0.028
Dissolved chloride	3.7	3.0
Calcium	17.7	16.5
Cobalt	< 0.08	< 0.0571
Copper	< 0.0040	< 0.0044
Iron	< 0.0667	0.0618
Magnesium	7.0	4.9
Manganese	0.0178	0.0080
Molybdenum	< 0.0667	< 0.0727
Sodium	14.8	11.3
Zinc	0.014	0.0200
3/Cadmium (Parts Per Billion)	< 0.10	< 0.006
Lead (Parts Per Billion)	< 0.50	< 0.30

1/Analyses by U.S. Fish and Wildlife Service, Fisheries Assistance, Vancouver, Washington.

2/Analyses by U.S. Fish and Wildlife Service, Marrowstone Field Station, Nordland, Washington.

3/Analyses by U.S. Geological Survey, Central Laboratory, Denver, Colorado.

Exhibit 2A

Water Analysis

Bonifer Spring #1

	Concentration (parts per million except where otherwise noted)	
	9/11/78	3/5/79
1/Temperature (°F)	57	44
Dissolved O_2	7	10
Dissolved CO_2	5 - 10	0 - 5
Dissolved H_2S	< 0.1	< 0.1
Total Dissolved Gas (%)	96.7	102.94
pH	6.5	7.0
2/Residue, filtrable	82.5	70.0
Residue, nonfiltrable	2.3	5.0
Turbidity (N.T.U.)	2.0	2.4
Total Alkalinity (ph 4.5 as $CaCO_3$)	33.2	17.8
Hardness (calculated as $CaCO_3$)	27.5	23.1
Nitrogen, ammonia	0.075	< 0.05
Nitrogen, nitrite	< .01	< 0.01
Nitrogen, nitrate	< .10	0.35
Dissolved orthophosphates	.025	0.01
Dissolved chloride	< 1.0	0.98
Calcium	6.9	6.3
Cobalt	< 0.08	< 0.0571
Copper	< 0.0040	< 0.0044
Iron	0.0667	0.0327
Magnesium	2.5	1.8
Manganese	0.0156	0.004
Molybdenum	< 0.0667	< 0.0727
Sodium	4.2	4.0
Zinc	0.038	0.020
3/Cadmium (Parts Per Billion)	< 0.10	< 0.006
Lead (Parts Per Billion)	< 0.50	< 0.30

1/Analyses by U.S. Fish and Wildlife Service, Fisheries Assistance, Vancouver, Washington.

2/Analyses by U.S. Fish and Wildlife Service, Marrowstone Field Station, Nordland, Washington.

3/Analyses by U.S. Geological Survey, Central Laboratory, Denver, Colorado.

Exhibit 2B

Water Analysis

Bonifer Spring #2

	Concentration (parts per million except where otherwise noted)	
	9/11/78	2/5/79
1/Temperature (°F)	57	43
Dissolved O_2	3	9
Dissolved CO_2	10 - 15	0 - 5
Dissolved H_2S	< 0.1	< 0.1
Total Dissolved Gas (%)	89.84	100.70
pH	6.1	6.4
2/Residue, filtrable	76.0	79.0
Residue, nonfiltrable	0.8	5.5
Turbidity (N.T.U.)	1.3	2.6
Total Alkalinity (ph 4.5 as $CaCO_3$)	34.9	19.9
Hardness (calculated as $CaCO_3$)	28.0	18.9
Nitrogen, ammonia	< 0.050	< 0.05
Nitrogen, nitrite	< 0.01	< 0.01
Nitrogen, nitrate	< 0.1	0.28
Dissolved orthophosphates	0.038	0.02
Dissolved chloride	< 1.0	1.06
Calcium	7.1	6.4
Cobalt	< 0.08	< 0.0571
Copper	< 0.0040	< 0.0044
Iron	< 0.0667	0.0691
Magnesium	2.5	0.7
Manganese	< 0.0089	< 0.0040
Molybdenum	0.0833	< 0.0727
Sodium	4.1	3.6
Zinc	0.008	0.0190
3/Cadmium (Parts Per Billion)	< 0.10	< 0.006
Lead (Parts Per Billion)	< 0.50	0.30

1/Analyses by U.S. Fish and Wildlife Service, Fisheries Assistance, Vancouver, Washington.

2/Analyses by U.S. Fish and Wildlife Service, Marrowstone Field Station, Nordland, Washington.

3/Analyses by U.S. Geological Survey, Central Laboratory, Denver, Colorado.

Exhibit 2C

Water Analysis

BONIFER SPRING #3

	CONCENTRATION (parts per million except where otherwise noted)	
	9/11/79	2/5/79
1/ TEMPERATURE (°F)	52	44
DISSOLVED O_2	8	9
DISSOLVED CO_2	5 - 10	o - 5
DISSOLVED H_2S	< 0.1	< 0.1
TOTAL DISSOLVED GAS (%)	99.16	99.23
pH	6.4	6.5
2/ RESIDUE, FILTRABLE	93.0	87.5
RESIDUE, NONFILTRABLE	4.5	7.0
TURBIDITY (N.T.U.)	3.3	4.7
TOTAL ALKALINITY (ph 4.5 as $CaCO_3$)	36.5	30.3
HARDNESS (calculated as $CaCO_3$)	32.0	27.5
NITROGEN, AMMONIA	< 0.050	< 0.05
NITROGEN, NITRITE	< 0.01	< 0.01
NITROGEN, NITRATE	< 0.1	0.39
DISSOLVED ORTHOPHOSPHATES	0.050	0.02
DISSOLVED CHLORIDE	< 1.0	0.95
CALCIUM	7.7	7*4
COBALT	< 0.08	(0.0571
COPPER	< 0.0040	< 0.0044
IRON	< 0.0667	0.0982
MAGNESIUM	3.1	2.2
MANGANESE	< 0.0089	0.0080
MOLYBDENUM	< 0.0667	< 0.0727
SODIUM	3.2	3.3
ZINC	0.100	0.0470
3/ CADMIUM (Parts Per Billion)	< 0.10	< 0.006
LEAD (Parts Per Billion)	< 0.50	< 0.30

1/ Analyses by U.S. Fish and Wildlife Service, Fisheries Assistance, Vancouver, Washington.

2/ Analyses by U.S. Fish and Wildlife Service, Marrowstone Field Station, Nordland, Washington.

3/ Analyses by U.S. Geological Survey, Central Laboratory, Denver, Colorado.

Exhibit 2D

Water Analysis

Thorn Hollow Springs

	Concentration (parts per million except where otherwise noted)	
	9/19/78	3/5/79
1/Temperature (°F)	54	46
Dissolved O_2	3	10
Dissolved CO_2	5 - 10	0 - 5
Dissolved H_2S	< 0.1	< 0.1
Total Dissolved Gas (%)	91.33	98.12
pH	6.4	6.4
2/Residue, filtrable	107.5	134.0
Residue, nonfiltrable	3.5	9.4
Turbidity (N.T.U.)	1.5	7.2
Total Alkalinity (ph 4.5 as $CaCO_3$)	43.2	40.0
Hardness (calculated as $CaCO_3$)	27.5	27.8
Nitrogen, ammonia	< 0.05	< 0.05
Nitrogen, nitrite	< 0.01	< 0.01
Nitrogen, nitrate	< 0.1	0.13
Dissolved orthophosphates	< 0.1	< 0.01
Dissolved chloride	2.7	< 1.0
Calcium	6.9	7.5
Cobalt	< 0.08	< 0.0571
Copper	0.0270	< 0.0044
Iron	< 0.0667	0.1200
Magnesium	2.5	2.2
Manganese	0.0200	0.0070
Molybdenum	0.0667	< 0.0727
Sodium	5.3	5.7
Zinc	0.070	0.0200
3/Cadmium (Parts Per Billion)	< 0.10	< 0.006
Lead (Parts Per Billion)	< 0.50	< 0.300

1/Analyses by U.S. Fish and Wildlife Service, Fisheries Assistance, Vancouver, Washington.

2/Analyses by U.S. Fish and Wildlife Service, Marrowstone Field Station, Nordland, Washington.

3/Analyses by U.S. Geological Survey, Central Laboratory, Denver, Colorado.

Exhibit 2E

THERMOGRAPH CHART SUMMARY

Minthorn Springs

WATER TEMPERATURES F°

Date	High	Low	Mean	Date	High	Low	Mean	Date	High	Low	Mean	Date	High	Low	Mean
May 1978				June 1978				July 1978				Aug 1978			
11*	52	51	51	1	57	51	54	1	57	57	57	1	60	56	58
12	51	50	51	2	58	50	54	2	57	56	56	2	61	56	59
13	50	50	50	3	59	50	54	3	56	56	56	3	62	57	60
14	50	50	50	4	59	52	56	4	56	56	56	4	62	57	60
15	50	50	50	5	59	52	56	5	59	57	58	5	61	58	60
16	50	49	50	6	58	53	56	6	60	57	58	6	62	57	59
17	50	49	49	7	56	52	54	7	58	57	58	7	62	58	60
18	53	50	51	8	59	52	56	8	59	57	58	8	62	58	60
19	55	51	53	9	54	52	54	9	59	57	58	9	62	58	60
20	54	51	53	10	53	52	52	10	59	57	58	10	61	58	59
21	53	49	51	11	58	52	55	11	58	56	57	11	60	58	59
22	51	49	50	12	53	52	53	12	59	56	58	12	60	58	59
23	51	50	50	13	55	52	53	13	59	57	58	13	58	57	58
24	51	50	50	14	55	52	53	14	60	57	59	14	60	57	58
25	53	50	51	15	55	51	53	15	60	58	59	15	60	57	58
26	52	50	51	16	58	52	55	16	60	58	59	16	58	57	58
27	51	50	51	17	59	52	56	17	59	56	58	17	58	57	58
28	52	51	51	18	56	53	55	18	59	57	58	18	60	57	58
29	54	50	52	19	59	53	56	19	59	57	58	19	60	58	59
30	55	50	53	20	59	55	57	20	59	57	58	20	58	58	58
31	56	51	53	21	56	55	56	21	60	58	59	21	58	57	58
				22	59	54	56	22	61	58	59	22	58	58	58
				23	57	56	56	23	61	59	60	23	58	57	58
				24	56	54	55	24	61	59	60	24	58	58	58
				25	56	54	55	25	61	58	59	25	61	52	55
				26	59	57	58	26	60	59	59	26	61	53	55
				27	59	57	58	27	62	57	59	27	61	53	55
				28	58	55	56	28	60	56	58	28	61	53	55
				29	58	58	58	29	61	56	58	29	61	53	55
				30	58	57	57	30	61	56	58	30	61	53	55
								31	60	56	58	31	61	53	55

* Thermograph installed

THERMOGRAPH CHART SUMMARY

Minthorn Springs

WATER TEMPERATURES F°

Date	High	Low	Mean	Date	High	Low	Mean	Date	High	Low	Mean	Date	High	Low	Mean
Sept 1978				Oct 1978				Nov 1978				Dec 1978			
1	61	53	55	1				1	52	51	52	1	49	49	49
2	61	53	55	2				2	52	50	51	2	50	49	49
3	61	53	55	3	61	53	55	3	51	50	51	3	51	49	50
4	61	53	55	4	61	53	55	4	51	51	51	4	51	47	49
5	61	53	55	5	61	53	55	5	52	51	51	5	49	48	48
6	61	53	55	6	61	53	55	6	53	51	52	6	49	47	48
7	61	53	55	7	54	53	53	7	53	50	51	7	49	47	48
8	61	53	55	8	54	53	53	8	52	52	52	8	48	47	48
9	61	53	55	9	54	53	53	9	53	52	52	9	50	49	49
10	61	53	55	10	54	53	53	10	52	51	51	10	50	49	49
11	61	53	55	11	54	53	53	11	51	50	50	11	50	50	50
12	61	53	55	12	54	53	53	12	50	49	49	12	50	49	50
13	61	53	55	13	54	53	53	13	51	50	50	13	49	49	49
14	61	53	55	14	54	53	53	14	51	50	51	14	50	49	49
15	61	53	55	15	54	53	53	15	51	50	51	15	49	48	48
16	61	53	55	16	54	53	53	16	50	49	50	16	48	46	47
17	61	53	55	17	54	53	53	17	52	50	51	17	50	47	48
18	61	53	55	18	54	53	53	18	50	47	49	18	49	47	48
19	61	53	55	19	54	53	53	19	49	46	47	19	48	45	46
20	61	53	55	20	54	53	53	20	48	47	47	20	49	47	48
21	61	53	55	21	54	53	53	21	47	45	46	21	49	48	48
22	61	53	55	22	54	53	53	22	48	47	47	22	49	49	49
23	61	53	55	23	54	53	53	23	49	47	48	23	50	48	49
24	61	53	55	24	54	53	53	24	49	47	48	24	50	49	49
25	61	53	55	25	53	51	52	25	49	48	48	25	49	47	48
26	61	53	55	26	53	51	52	26	49	48	48	26	49	47	48
27	61	53	55	27	53	51	52	27	49	48	48	27	48	47	47
28	61	53	55	28	53	51	52	28	49	48	48	28	48	45	46
29	61	53	55	29	53	51	52	29	50	59	59	29	45	43	44
30	61	53	55	30	52	52	52	30	49	49	49	30	44	42	43
				31	53	51	52					31	44	41	43

THERMOGRAPH CHART SUMMARY

Minthorn Springs

WATER TEMPERATURES F°

Date	High	Low	Mean	Date	High	Low	Mean	Date	High	Low	Mean	Date	High	Low	Mean
Jan 1979				Feb 1979				Mar 1979				Apr 1979			
1	44	42	43	1	44	40	42	1**				1	52	43	48
2	45	43	44	2	44	38	41	2				2	52	43	48
3	45	44	44	3	45	41	43	3				3	52	43	48
4	46	42	44	4	45	42	43	4				4	52	43	48
5	44	41	43	5	45	43	44	5				5	52	43	48
6	45	43	44	6	47	45	46	6				6	52	43	48
7	44	41	43	7	47	45	46	7				7	52	43	48
8	45	41	43	8	47	45	46	8				8	52	43	48
9	45	42	43	9	47	45	46	9				9	52	43	48
10	45	42	44	10	47	45	46	10				10	52	43	48
11	45	43	44	11	47	45	46	11				11	53	43	48
12	47	44	45	12	47	45	46	12				12	53	43	48
13	47	44	45	13	45	38	41	13				13	53	43	48
14	46	43	45	14	44	40	42	14				14	53	43	48
15	46	43	45	15	45	43	44	15				15	52	43	48
16	47	43	45	16	46	44	45	16				16	52	43	48
17	47	43	45	17	45	43	44	17				17	52	43	48
18	45	43	44	18	46	44	45	18				18	52	43	48
19	46	43	44	19	46	44	45	19				19	52	43	48
20	47	45	46	20	46	43	45	20				20	52	43	48
21	48	46	47	21	46	43	44	21				21	52	43	48
22	46	42	44	22*				22				22	52	43	48
23	46	42	44	23				23	52	43	48	23	52	43	48
24	46	42	44	24				24	52	43	48	24	52	43	48
25	45	43	44	25				25	52	43	48	25	52	43	48
26	45	42	44	26				26	52	43	48	26	52	43	48
27	45	43	44	27				27	52	43	48	27	52	43	48
28	47	43	45	28				28	52	43	48	28	52	43	48
29	45	41	43					29	52	43	48	29	52	43	48
30	45	42	43					30	52	43	48	30	52	43	48
31	44	41	42					31	52	43	48				

** Data gap - Thermograph malfunction

THERMOGRAPH CHART SUMMARY

Minthorn Springs

WATER TEMPERATURES F°

Date	High	Low	Mean		Date	High	Low	Mean		Date	High	Low	Mean		Date	High	Low	Mean
May 1979																		
1																		
2***	52	43	48															
3																		
4																		
5																		
6																		
7																		
8																		
9																		
10																		
11																		
12																		
13																		
14																		
15																		
16																		
17																		
18																		
19																		
20																		
21																		
22																		
23																		
24																		
25																		
26																		
27																		
28																		
29																		
30																		

*** Readings discontinued

THERMOGRAPH CHART SUMMARY

Bonifer Springs #1

WATER TEMPERATURES F°

Date	High	Low	Mean	Date	High	Low	Mean	Date	High	Low	Mean	Date	High	Low	Mean
July 1978				Aug 1978				Sept 1978				Oct 1978			
24*	58	54	56	1	58	54	56	1	58	54	56	1	56	54	55
25	58	54	56	2	58	54	56	2	58	54	56	2	55	55	55
26	58	54	56	3	58	54	56	3	58	54	56	3	56	55	55
27	58	54	56	4	58	54	56	4	58	54	56	4	57	51	54
28	58	54	56	5	58	54	56	5	58	54	56	5	57	51	54
29	58	54	56	6	58	54	56	6	58	50	54	6	57	51	54
30	58	54	56	7	58	54	56	7	58	50	54	7	57	51	54
31	58	54	56	8	58	54	56	8	59	50	54	8	57	51	54
				9	58	54	56	9	58	50	54	9	57	51	54
				10	58	54	56	10	58	50	54	10	57	51	54
				11	58	54	56	11	58	50	54	11	57	51	54
				12	58	54	56	12	58	50	54	12	57	51	54
				13	58	54	56	13	58	50	54	13	57	51	54
				14	58	54	56	14	58	50	54	14	57	51	54
				15	58	54	56	15	58	50	54	15	57	51	54
				16	58	54	56	16	58	50	54	16	57	51	54
				17	58	54	56	17	58	50	54	17	57	51	54
				18	58	54	56	18	58	50	54	18	57	51	54
				19	58	54	56	19	58	50	54	19	57	51	54
				20	58	54	56	20	58	50	54	20	57	51	54
				21	58	54	56	21	58	50	54	21	57	51	54
				22	58	54	56	22	58	50	54	22	57	51	54
				23	58	54	56	23	56	50	53	23	57	51	54
				24	58	54	56	24	56	55	56	24	59	55	57
				25	58	54	56	25	55	54	54	25	58	52	55
				26	58	54	56	26	54	53	54	26	56	52	54
				27	58	54	56	27	56	54	55	27	57	54	55
				28	58	54	56	28	56	54	55	28	57	55	56
				29	58	54	56	29	56	56	56	29	55	54	54
				30	58	54	56	30	56	56	56	30	56	52	54
												31	55	53	54

* Thermograph installed

THERMOGRAPH CHART SUMMARY

Bonifer Springs #1

WATER TEMPERATURES F°

Date	High	Low	Mean	Date	High	Low	Mean	Date	High	Low	Mean	Date	High	Low	Mean
Nov 1978				Dec 1978				Jan 1979				Feb 1979			
1	55	55	54	1	51	50	51	1	45	43	44	1	44	41	41
2	56	55	55	2	51	51	51	2	44	45	45	2	44	41	41
3	56	54	55	3	51	51	51	3	45	45	45	3	44	42	43
4	57	54	55	4	51	47	49	4	46	45	45	4	45	43	44
5	55	52	53	5	51	49	50	5	46	43	45	5	45	44	44
6	55	53	54	6	49	48	49	6	45	43	44	6	45	44	44
7	56	55	55	7	49	47	48	7	45	43	44	7	44	44	44
8	55	53	54	8	49	47	48	8	45	43	44	8	44	44	44
9	53	52	53	9	49	49	49	9	45	44	44	9	44	44	44
10	53	49	51	10	49	49	49	10	45	44	44	10	44	44	44
11	52	50	51	11	49	48	49	11	45	43	44	11	44	44	44
12	53	50	51	12	49	48	49	12	46	45	45	12	44	44	44
13	52	51	51	13	49	48	49	13	47	45	46	13	44	44	44
14	52	51	52	14	49	48	49	14	45	44	45	14	44	43	44
15	53	50	51	15	50	48	49	15	46	45	45	15	44	43	44
16	53	51	52	16	49	48	48	16	46	45	45	16	44	43	43
17	51	50	50	17	49	48	48	17	45	44	44	17	44	43	43
18	53	51	52	18	49	47	48	18	46	43	44	18	44	43	43
19	51	49	49	19	49	47	48	19	46	43	44	19	44	43	43
20	50	49	50	20	48	48	48	20	48	45	46	20	44	42	43
21	50	50	50	21	49	48	48	21	45	44	44	21	43	42	42
22	51	50	51	22	49	48	48	22	46	44	45	22	44	43	43
23	51	50	51	23	48	48	48	23	46	44	45	23	45	43	44
24	51	51	51	24	49	48	48	24	46	44	45	24	45	43	44
25	51	51	51	25	49	47	48	25	45	44	44	25	45	43	44
26	51	51	51	26	48	47	47	26	45	43	44	26	45	44	44
27	51	49	50	27	48	47	47	27	45	43	44	27	45	44	44
28	52	50	51	28	47	47	47	28	45	41	43	28	44	43	43
29	52	51	51	29	48	45	46	29	45	41	42				
30	51	51	51	30	46	43	45	30	44	41	41				
				31	45	43	44	31	44	41	41				

THERMOGRAPH CHART SUMMARY

Bonifer Springs #1

WATER TEMPERATURES F°

Date	High	Low	Mean	Date	High	Low	Mean	Date	High	Low	Mean	Date	High	Low	Mean
Mar 1979				Apr 1979				May 1979				June 1979			
1	44	43	43	1	45	43	44	1	48	44	45	1	53	47	50
2	43	43	43	2	45	43	44	2	48	44	45	2	54	57	50
3	46	43	44	3	44	43	44	3	47	44	46	3	54	57	50
4	43	43	43	4	46	43	44	4	49	43	45	4	54	47	50
5	45	44	44	5	49	43	44	5	47	44	46	5	53	47	50
6	45	44	44	6	45	43	44	6	45	44	45	6	52	47	50
7	46	43	44	7	47	43	44	7	46	44	45	7	50	47	49
8	46	43	44	8	45	43	44	8	47	44	46	8	52	47	50
9	45	43	44	9	45	43	44	9	47	45	46	9	53	47	50
10	45	43	44	10	46	43	44	10	48	44	46	10	53	48	50
11	46	43	44	11	46	43	44	11	49	44	47	11	53	48	50
12	46	43	44	12	45	43	44	12	51	45	48	12	54	48	51
13	45	43	44	13	46	44	44	13	51	45	48	13	54	48	51
14	45	43	44	14	47	43	44	14	51	45	48	14	54	47	51
15	46	43	44	15	47	43	44	15	52	45	49	15	54	47	51
16	45	43	44	16	47	43	44	16	51	46	49	16	54	47	51
17	44	43	44	17	47	43	44	17	51	45	49	17	50	48	49
18	45	43	44	18	47	43	44	18	51	46	49	18	49	48	48
19	46	43	44	19	46	43	44	19	52	45	49	19	52	48	49
20	45	43	44	20	49	43	44	20	51	45	49	20	53	48	50
21	45	43	44	21	49	43	44	21	51	45	49	21	55	48	51
22	45	43	44	22	48	43	44	22	53	46	49	22	55	48	51
23	45	43	44	23	45	43	44	23	53	47	50	23	56	48	52
24	48	43	44	24	45	43	44	24	49	47	48	24	55	48	51
25	47	43	44	25	50	44	45	25	51	46	48	25	54	49	51
26	46	43	44	26	50	44	45	26	53	46	49	26	56	49	53
27	44	43	43	27	50	44	45	27	52	47	49	27	55	48	52
28	45	43	44	28	50	44	45	28	51	45	48	28	56	49	53
29	44	43	44	29	49	44	45	29	51	45	48	29	57	50	53
30	45	43	44	30	48	44	45	30	52	45	49	30	56	50	53
31	45	43	44					31	52	47	50				

THERMOGRAPH CHART SUMMARY

Bonifer Springs #1

WATER TEMPERATURES F°

Date	High	Low	Mean	Date	High	Low	Mean	Date	High	Low	Mean	Date	High	Low	Mean
July 1979				Aug 1979				Sept 1979				Oct 1979			
1	53	50	51	1	59	52	56	1	59	57	58	1	61	55	58
2	50	49	50	2	60	53	56	2	61	55	58	2	59	55	57
3	56	49	53	3	60	52	55	3	59	57	58	3	59	55	57
4	56	51	54	4	60	52	55	4	57	57	57	4	59	55	57
5	56	51	54	5	60	52	55	5	59	57	58	5	59	55	57
6	56	51	54	6	60	52	55	6	61	55	58	6	59	55	57
7	56	51	54	7	60	52	55	7	61	57	59	7	59	55	57
8	57	51	54	8	60	52	55	8	61	55	58	8	59	57	58
9	57	51	54	9	60	52	55	9	61	57	59	9	59	55	57
10	56	51	53	10	60	52	55	10	59	55	57	10	59	55	57
11	56	52	54	11	61	55	58	11	61	55	58	11	59	55	57
12	56	52	54	12	61	55	58	12	59	55	57	12	59	55	57
13	56	51	53	13	61	55	58	13	59	55	57	13	59	55	57
14	57	51	54	14	57	55	56	14	61	55	58	14	59	55	57
15	58	51	54	15	59	55	57	15	61	55	58	15	57	57	57
16	58	50	54	16	61	55	58	16	61	55	58	16	57	57	57
17	58	50	54	17	59	55	57	17	61	55	58	17	57	57	57
18	59	51	55	18	59	55	57	18	61	55	58	18	59	55	57
19	59	51	55	19	59	55	57	19	61	55	58	19	57	57	57
20	59	51	55	20	59	55	57	20	61	57	59	20	57	57	57
21	59	51	55	21	59	55	57	21	61	57	59	21***			
22	58	51	54	22	59	55	57	22	61	55	58	22			
23	59	50	55	23	61	55	58	23	61	55	58	23			
24	59	51	55	24	57	55	58	24	61	55	58	24			
25	59	51	55	25	61	55	58	25	61	55	58	25			
26	59	51	55	26	61	55	58	26	57	55	56	26			
27	59	51	55	27	59	55	58	27	61	55	58	27			
28	60	53	58	28	59	55	57	28	61	55	58	28			
29	59	52	55	29	59	55	57	29	59	57	58	29			
30	60	52	56	30	61	57	59	30	61	55	58	30			
31	60	52	56	31	59	57	58					31			

*** Readings Discontinued

THERMOGRAPH CHART SUMMARY

Bonifer Spring #2

WATER TEMPERATURES F°

Date	High	Low	Mean	Date	High	Low	Mean	Date	High	Low	Mean	Date	High	Low	Mean
Oct 1978				Nov 1978				Dec 1978				Jan 1979			
4*	55	54	54	1	53	52	53	1	51	51	51	1	43	43	43
5	55	54	54	2	53	52	53	2	51	51	51	2	43	43	43
6	55	54	54	3	53	52	53	3	51	51	51	3	43	43	43
7	55	54	54	4	53	52	53	4	51	51	51	4	43	43	43
8	55	54	54	5	53	52	53	5	51	51	51	5	43	43	43
9	55	54	54	6	53	52	53	6	51	51	51	6	43	43	43
10	55	54	54	7	53	52	53	7	51	49	50	7	43	43	43
11	55	54	54	8	53	52	53	8	49	49	49	8	43	43	43
12	55	54	54	9	53	52	53	9	49	49	49	9	43	43	43
13	55	54	54	10	53	52	53	10	49	49	49	10	43	43	43
14	55	54	54	11	53	52	53	11	49	49	49	11	43	43	43
15	55	54	54	12	53	52	53	12	49	49	49	12	43	43	43
16	55	54	54	13	53	52	53	13	46	44	45	13	43	43	43
17	55	54	54	14	53	52	53	14	45	44	45	14	43	43	43
18	55	54	54	15	53	52	53	15	45	45	45	15	43	43	43
19	55	54	54	16	53	52	52	16	45	45	45	16	43	43	43
20	55	54	54	17	53	53	53	17	45	45	45	17	43	43	43
21	55	54	54	18	51	51	51	18	45	45	45	18	43	43	43
22	55	54	54	19	51	51	51	19	45	45	45	19	43	43	43
23	55	54	54	20	51	51	51	20	45	45	45	20	43	43	43
24	55	54	54	21	51	51	51	21	45	45	45	21	43	43	43
25	55	54	54	22	51	51	51	22	45	45	45	22	43	43	43
26	55	54	54	23	51	51	51	23	45	45	45	23	43	43	43
27	55	54	54	24	51	51	51	24	45	45	45	24	43	43	43
28	55	54	54	25	51	51	51	25	45	44	45	25	43	43	43
29	55	54	54	26	51	51	51	26	44	44	44	26	43	43	43
30	55	54	54	27	51	51	51	27	44	44	44	27	43	43	43
31	55	54	54	28	51	51	51	28	44	44	44	28	43	43	43
				29	51	51	51	29	44	44	44	29	43	43	43
				30	51	51	51	30	44	43	43	30	43	43	43
								31	43	43	43	31	43	43	43

* Thermograph installed

THERMOGRAPH CHART SUMMARY

Bonifer Spring #2

WATER TEMPERATURES F°

Date	High	Low	Mean	Date	High	Low	Mean	Date	High	Low	Mean	Date	High	Low	Mean
Feb 1979				Mar 1979				Apr 1979				May 1979			
1	43	43	43	1	41	40	40	1**				1	45	45	45
2	43	43	43	2	41	40	40	2				2	45	45	45
3	43	43	43	3	41	40	40	3				3	45	45	45
4	43	43	43	4	41	40	40	4				4	45	45	45
5	43	43	43	5	41	40	40	5				5	45	45	45
6	43	43	43	6	41	40	40	6				6	45	45	45
7	43	43	43	7	41	40	40	7				7	45	45	45
8	43	43	43	8	41	40	40	8				8	45	45	45
9	43	43	43	9	41	40	40	9				9	45	45	45
10	43	43	43	10	42	41	41	10				10	45	45	45
11	43	43	43	11	42	41	41	11				11	45	45	45
12	43	43	43	12	42	41	41	12				12	45	45	45
13	43	43	43	13	42	41	41	13				13	45	45	45
14	42	42	42	14	42	41	41	14				14	45	45	45
15	42	41	41	15	42	41	41	15				15	45	45	45
16	41	41	41	16	42	41	41	16				16	45	45	45
17	41	41	41	17	42	41	41	17				17	45	45	45
18	41	40	40	18	42	41	41	18				18	45	45	45
19	40	40	40	19	42	41	41	19				19	45	45	45
20	40	40	40	20	42	41	41	20				20	45	45	45
21	40	40	40	21	42	41	41	21				21	45	45	45
22	40	40	40	22	42	41	41	22				22	45	45	45
23	40	40	40	23	42	42	42	23				23	45	45	45
24	40	40	40	24**				24				24	45	45	45
25	40	40	40	25				25				25	45	45	45
26	40	40	40	26				26				26	45	45	45
27	40	40	40	27				27				27	45	45	45
28	40	40	40	28				28				28	45	45	45
				29				29				29	45	45	45
				30				30				30	45	45	45
				31								31	45	45	45

** Data gap - Thermograph malfunction

THERMOGRAPH CHART SUMMARY

Bonifer Spring #2

WATER TEMPERATURES F°

Date	High	Low	Mean	Date	High	Low	Mean	Date	High	Low	Mean	Date	High	Low	Mean
Jun 1979				July 1979				Aug 1979				Sept 1979			
1	59	59	59	1				1	56	56	56	1	58	58	58
2	59	59	59	2				2	56	56	56	2	58	58	58
3	59	59	59	3				3	56	56	56	3	58	58	58
4	59	59	59	4				4	56	56	56	4	58	58	58
5	59	59	59	5				5	56	56	56	5	58	58	58
6	59	59	59	6				6	56	56	56	6	58	58	58
7	59	59	59	7				7	56	56	56	7	58	58	58
8	59	59	59	8				8	56	56	56	8	58	58	58
9	59	59	59	9				9	56	56	56	9	58	58	58
10	59	59	59	10				10	56	56	56	10	58	58	58
11	59	59	59	11				11	56	56	56	11	58	58	58
12	59	59	59	12				12	56	56	56	12	58	58	58
13	59	59	59	13				13	58	58	58	13	58	58	58
14	59	59	59	14				14	58	58	58	14	58	58	58
15	59	59	59	15				15	58	58	58	15	58	58	58
16	59	59	59	16				16	58	58	58	16	58	58	58
17	59	59	59	17				17	58	58	58	17	58	58	58
18	59	59	59	18				18	58	58	58	18	58	58	58
19	59	59	59	19				19	58	58	58	19	58	58	58
20	59	59	59	20				20	58	58	58	20	58	58	58
21	59	59	59	21				21	58	58	58	21	58	58	58
22	59	59	59	22				22	58	58	58	22	58	58	58
23	59	59	59	23				23	58	58	58	23	58	58	58
24**				24				24	58	58	58	24	58	58	58
25				25				25	58	58	58	25	58	58	58
26				26				26	58	58	58	26	58	58	58
27				27				27	58	58	58	27	58	58	58
28				28				28	58	58	58	28	58	58	58
29				29				29	58	58	58	29	58	58	58
30				30				30	58	58	58	30	58	58	58
31				31				31	58	58	58	31	58	58	58

** Data gap - Thermograph malfunction

THERMOGRAPH CHART SUMMARY

Bonifer Spring #2

WATER TEMPERATURES F°

Date	High	Low	Mean		Date	High	Low	Mean		Date	High	Low	Mean		Date	High	Low	Mean
Oct 1979																		
1	58	58	58															
2	58	58	58															
3	58	58	58															
4	58	58	58															
5	58	58	58															
6	58	58	58															
7	58	58	58															
8	58	58	58															
9	58	58	58															
10	58	58	58															
11	58	58	58															
12	58	58	58															
13	58	58	58															
14	58	58	58															
15	58	58	58															
16	58	58	58															
17	58	58	58															
18	58	58	58															
19	58	58	58															
20	58	58	58															
21***																		

*** Readings Discontinued

THERMOGRAPH CHART SUMMARY

Bonifer Springs #3

WATER TEMPERATURES F°

Date	High	Low	Mean	Date	High	Low	Mean	Date	High	Low	Mean	Date	High	Low	Mean
Oct 1978				Nov 1978				Dec 1978				Jan 1979			
4*	46	42	45	1**				1	47	47	47	1	40	39	40
5	43	42	42	2				2	47	47	47	2	39	39	39
6	43	42	42	3				3	47	47	47	3	40	39	39
7	43	42	42	4				4	47	44	45	4	41	40	41
8	44	43	43	5				5	44	44	44	5	41	40	40
9	44	43	44	6				6	44	44	44	6	40	40	40
10	44	44	44	7				7	43	42	43	7	39	39	39
11	44	44	44	8				8	43	43	43	8	39	39	39
12	43	42	42	9				9	44	48	43	9	40	39	39
13	42	42	42	10				10	45	44	44	10	41	40	40
14	42	42	42	11				11	45	43	44	11	40	40	40
15	42	42	42	12				12	43	43	43	12	41	40	40
16	43	43	43	13				13	43	42	43	13	42	40	41
17	43	43	43	14				14	43	42	43	14	43	42	43
18	43	43	43	15	45	43	44	15	43	42	42	15	42	42	42
19	43	43	43	16	46	45	45	16	43	42	42	16	42	42	42
20	43	43	43	17	46	46	46	17	44	43	43	17	43	42	42
21	43	42	42	18	46	44	45	18	45	43	44	18	42	42	42
22	42	42	42	19	44	43	44	19	43	43	43	19	42	41	42
23	42	42	42	20	43	43	43	20	44	44	44	20	43	41	42
24	42	42	42	21	44	43	43	21	45	44	44	21	44	42	43
25	42	41	41	22	44	44	44	22	45	45	45	22	44	43	44
26	41	41	41	23	45	45	45	23	45	45	45	23	43	42	42
27	41	41	41	24	45	45	45	24	46	45	45	24	41	43	42
28 **				25	45	45	45	25	45	43	44	25	43	42	42
29				26	46	45	45	26	43	43	43	26	43	43	43
30				27	45	45	45	27	43	43	43	27	43	42	43
31				28	46	46	46	28	43	42	42	28	43	43	43
				29	47	46	46	29	42	40	41	29	43	41	42
				30	47	47	47	30	40	40	40	30	41	40	40
												31	39	39	39

* Thermograph installed
** Data gap - Thermograph malfunction

THERMOGRAPH CHART SUMMARY

Bonifer Springs #3

WATER TEMPERATURES F°

Date	High	Low	Mean	Date	High	Low	Mean	Date	High	Low	Mean	Date	High	Low	Mean
Feb 1979				Mar 1979				Apr 1979				May 1979			
1	39	39	39	1	43	42	42	1**				1**			
2	39	39	39	2	42	41	41	2				2	59	55	57
3	40	38	39	3	43	41	42	3				3	53	47	50
4	41	40	40	4	42	42	42	4				4	47	46	47
5	43	41	42	5	44	42	43	5				5	46	44	45
6	43	43	43	6	44	44	44	6				6	45	44	45
7	43	43	43	7	46	44	45	7				7	45	44	45
8	44	42	43	8	48	43	44	8				8	45	44	45
9	41	41	41	9	44	43	43	9				9	46	44	45
10	42	42	42	10	44	42	43	10				10	47	44	46
11	43	42	42	11	47	43	45	11				11	52	46	49
12	43	43	43	12	48	44	46	12				12	52	47	49
13	43	43	43	13	47	47	47	13				13	51	48	50
14	43	43	43	14	48	44	46	14				14	53	49	51
15	43	43	43	15	47	47	47	15				15	53	50	51
16	43	43	43	16	46	46	46	16				16	51	48	49
17	43	43	43	17	46	45	45	17				17	53	49	51
18	43	43	43	18	45	45	45	18				18	52	48	50
19	43	43	43	19	44	42	43	19				19	51	48	50
20	43	43	43	20	45	42	43	20				20	52	49	51
21	43	43	43	21	45	42	44	21				21	53	50	51
22	43	43	43	22	45	43	44	22				22	54	51	52
23	43	43	43	23	46	36	40	23				23	51	50	50
24	43	43	43	24	42	40	41	24				24	52	49	51
25	44	43	43	25	42	40	41	25				25	54	51	52
26	44	44	44	26	42	40	41	26				26	51	49	50
27	44	43	43	27	42	40	41	27				27	50	48	49
28	43	43	43	28**				28				28	49	47	48
				29				29				29	51	47	49
				30				30				30	51	48	49
				31								31	53	49	51

** Data gap - Thermograph malfunction

Exhibit 30
Page 2

THERMOGRAPH CHART SUMMARY

Bonifer Springs #3

WATER TEMPERATURES F°

Date	High	Low	Mean		Date	High	Low	Mean		Date	High	Low	Mean		Date	High	Low	Mean
June 1979					July 1979					Aug 1979					Sept 1979			
1	54	51	53		1	54	54	54		1	59	55	57		1	59	58	58
2	55	51	53		2	56	52	54		2	60	55	58		2	58	57	57
3	55	51	53		3	58	52	55		3	57	53	55		3	58	57	57
4	53	51	52		4	58	55	56		4	59	55	57		4	59	57	58
5	52	50	51		5	58	55	56		5	58	55	56		5	59	57	58
6	50	48	49		6	58	56	57		6	58	56	57		6	60	58	59
7	50	49	49		7	59	55	57		7	58	55	57		7	59	57	58
8	53	49	51		8	58	55	57		8	59	55	57		8	58	56	57
9	55	51	53		9	58	56	57		9	59	57	58		9	57	55	56
10	54	52	53		10	58	56	57		10	60	58	59		10	58	58	58
11	55	52	54		11	58	56	57		11	61	57	59		11	58	58	58
12	56	51	53		12	58	56	57		12	61	57	59		12	58	56	57
13	53	50	51		13	55	55	55		13	57	57	57		13	58	56	57
14	58	53	55		14	56	53	55		14	57	57	57		14	57	55	56
15	58	53	55		15	58	55	56		15	61	58	59		15	57	55	56
16	58	53	55		16	56	53	55		16	60	57	58		16	57	55	56
17	58	53	55		17	54	52	53		17	59	57	58		17	57	56	56
18	58	53	55		18	53	51	52		18	60	58	59		18	57	56	57
19	58	53	55		19	55	51	53		19	59	57	58		19	57	56	56
20	58	53	55		20	55	52	54		20	60	59	59		20	56	54	55
21	58	53	55		21	57	53	55		21	59	59	59		21	56	54	55
22	58	52	56		22	58	55	56		22	60	58	59		22	56	54	55
23	57	53	55		23	59	55	57		23	58	57	58		23	55	55	55
24	57	53	55		24	59	55	57		24	59	57	58		24	57	55	56
25	59	53	56		25	57	55	56		25	59	58	58		25	57	55	56
26	58	54	56		26	56	54	55		26	59	58	58		26	57	56	56
27	58	54	56		27	54	52	53		27	59	57	58		27	57	56	57
28	59	54	57		28	54	52	53		28	59	57	58		28	56	55	56
29	58	55	56		29	57	53	55		29	61	59	60		29	56	55	55
30	55	54	54		30	59	55	57		30	59	58	59		30	56	54	55
31					31	58	55	56		31	60	58	59		31			

THERMOGRAPH CHART SUMMARY

Bonifer Springs #3

WATER TEMPERATURES F°

Date	High	Low	Mean		Date	High	Low	Mean		Date	High	Low	Mean		Date	High	Low	Mean
Oct 1979																		
1	55	54	55															
2	55	54	54															
3	56	54	55															
4	56	55	56															
5	57	56	56															
6	57	55	56															
7	56	54	55															
8	54	53	54															
9	55	54	55															
10	55	54	53															
11	56	53	55															
12	55	54	53															
13	55	55	55															
14	55	55	55															
15	55	55	55															
16	55	54	55															
17	54	54	54															
18	54	53	53															
18	53	53	53															
19	53	53	53															
20	53	53	53															
21	53	53	53															
22***																		
23																		
24																		
25																		
26																		
27																		
28																		
29																		
30																		
31																		

*** Readings Discontinued

THERMOGRAPH CHART SUMMARY

Thorn Hollow Springs

WATER TEMPERATURES F°

Date	High	Low	Mean	Date	High	Low	Mean	Date	High	Low	Mean	Date	High	Low	Mean
May 1978				June 1978				July 1978				Aug 1978			
1*	50	49	50	1	57	55	56	1	66	66	66	1	69	67	68
2	50	49	50	2	58	56	57	2	66	64	65	2	68	67	68
3	50	49	50	3	59	58	59	3	64	62	63	3	70	67	69
4	50	49	50	4	60	59	59	4	62	60	61	4	70	70	70
5	50	49	50	5	60	59	60	5	61	60	61	5	71	70	70
6	50	49	50	6	60	60	60	6	63	61	62	6	72	70	71
7	50	49	50	7	60	59	60	7	64	63	64	7	70	69	69
8	50	49	50	8	59	59	59	8	66	64	65	8	70	69	69
9	50	49	50	9	59	58	59	9	66	66	66	9	71	70	70
10	50	49	50	10	58	56	57	10	66	66	66	10	71	69	70
11	50	49	40	11	57	55	56	11	66	65	65	11	70	69	69
12	49	49	49	12	57	57	57	12	66	65	65	12	70	68	69
13	49	49	49	13	57	56	57	13	66	65	66	13	68	64	66
14	49	48	48	14	57	56	57	14	68	66	67	14	64	62	63
15	48	48	48	15	57	56	57	15	68	67	67	15	64	64	64
16	48	48	48	16	59	57	58	16	68	65	66	16	64	63	63
17	50	48	49	17	61	59	60	17	64	64	64	17	63	59	61
18	53	50	52	18	61	61	61	18	64	64	64	18	60	59	60
19	55	52	54	19	66	64	65	19	64	64	64	19	66	60	60
20	54	53	54	20	64	64	64	20	66	64	65	20	61	60	60
21	54	52	53	21	64	64	64	21	66	65	66	21	61	60	60
22	53	51	52	22	64	64	64	22	67	66	67	22	60	60	60
23	51	50	51	23	64	64	64	23	68	67	67	23	60	58	59
24	51	50	51	24	64	64	64	24	68	67	67	24	59	59	59
25	52	50	51	25	64	62	63	25	68	67	67	25	59	58	59
26	52	52	52	26	62	61	62	26	68	67	67	26	58	57	58
27	53	52	53	27	64	62	63	27	68	65	66	27	57	57	57
28	53	53	53	28	66	64	65	28	66	64	65	28	59	57	58
29	54	53	53	29	66	66	66	29	66	64	65	29	60	59	60
30	55	53	54	30	66	66	66	30	69	66	67	30	61	60	61
31	55	54	55					31	69	67	68	31	61	59	60

* Thermograph installed

THERMOGRAPH CHART SUMMARY

Thorn Hollow Springs

WATER TEMPERATURES F°

Date	High	Low	Mean	Date	High	Low	Mean	Date	High	Low	Mean	Date	High	Low	Mean
Sept 1978				Oct 1978				Nov 1978				Dec 1978			
1	59	58	59	1	55	54	55	1	45	45	45	1	44	44	44
2	58	58	58	2	54	54	54	2	45	45	46	2	44	44	44
3	58	58	58	3	54	53	54	3	46	46	46	3	45	44	44
4	60	58	59	4	53	53	53	4	46	46	46	4	46	43	45
5	61	60	61	5	53	53	53	5	46	45	45	5	43	43	43
6	61	59	60	6	53	52	52	6	45	45	45	6	43	42	43
7	59	58	59	7	52	52	52	7	46	45	45	7	42	39	40
8	58	56	57	8	52	52	52	8	45	45	45	8	40	39	39
9	56	56	56	9	53	53	53	9	45	44	45	9	41	40	40
10	56	53	55	10	53	53	53	10	44	43	43	10	42	41	41
11	53	53	53	11	53	52	52	11	43	42	42	11	44	42	43
12	54	53	54	12	52	51	51	12	42	42	42	12	45	44	44
13	55	54	55	13	51	50	51	13	42	42	42	13	45	43	44
14	56	55	56	14	50	49	50	14	42	42	42	14	42	42	42
15	57	56	57	15	50	49	50	15	42	42	42	15	42	42	42
16	57	56	57	16	51	50	51	16	42	42	42	16	42	42	42
17	56	54	55	17	52	51	52	17	42	42	42	17	43	43	43
18	54	52	53	18	52	52	52	18	42	42	42	18	44	43	43
19	52	52	52	19	52	52	52	19	42	39	40	19	43	43	43
20	52	52	52	20	52	52	52	20	39	39	39	20	44	43	44
21	52	52	52	21	52	50	51	21	39	39	39	21	45	44	44
22	53	52	53	22	50	49	49	22	39	39	39	22	44	44	44
23	55	53	54	23	49	49	49	23	39	39	39	23	45	44	44
24	56	55	56	24	49	47	48	24	39	39	39	24	45	44	45
25	57	56	57	25	47	45	46	25	39	39	39	25	44	43	44
26	58	57	58	26	45	45	45	26	40	40	40	26	44	43	44
27	58	58	58	27	46	45	46	27	40	40	40	27	43	42	43
28	58	57	58	28	46	46	46	28	40	42	41	28	42	42	41
29	57	56	57	29	46	46	46	29	42	42	42	29	41	39	40
30	56	55	56	30	46	45	45	30	42	43	42	30	39	38	39
				31	45	45	45								

THERMOGRAPH CHART SUMMARY

Thorn Hollow Springs

WATER TEMPERATURES F°

Date	High	Low	Mean	Date	High	Low	Mean	Date	High	Low	Mean	Date	High	Low	Mean
Jan 1979				Feb 1979				Mar 1979				Apr 1979			
1	38	38	38	1	39	38	38	1	45	44	44	1	52	46	48
2	38	38	38	2	38	38	38	2	45	44	44	2	52	46	48
3	38	38	38	3	38	38	38	3	45	44	44	3	52	46	48
4	38	38	38	4	38	38	38	4	46	45	45	4	52	46	48
5	38	38	38	5	38	38	38	5	47	46	46	5	52	46	48
6	38	38	38	6	39	39	39	6	49	47	48	6	52	46	48
7	38	38	38	7	40	40	40	7	49	49	49	7	52	46	48
8	38	38	38	8	43	41	42	8	49	47	48	8	52	46	48
9	37	37	37	9	45	43	44	9	47	46	46	9	52	46	48
10	37	37	37	10	44	44	44	10	46	46	46	10	52	46	48
11	37	37	37	11	44	44	44	11	48	47	47	11	52	46	48
12	38	37	37	12	45	45	45	12	47	47	47	12	52	46	48
13	38	38	38	13	45	45	45	13	48	47	47	13	52	46	48
14	38	38	38	14	46	46	46	14	48	47	47	14	52	46	48
15	38	38	38	15	45	43	44	15	48	47	47	15	52	46	48
16	38	38	38	16	44	43	43	16	47	46	46	16	52	46	48
17	38	38	38	17	44	44	44	17	46	45	46	17	52	46	48
18	38	38	38	18	44	44	44	18	46	45	46	18	52	46	48
19	38	38	38	19	44	44	44	19	46	45	46	19	52	46	48
20	38	38	38	20	44	43	44	20	47	47	47	20	52	46	48
21	39	38	38	21	43	43	43	21	48	47	47	21	52	46	48
22	39	39	39	22	44	43	44	22**				22	52	46	48
23	39	39	39	23	45	44	44	23				23	52	46	48
24	40	39	39	24	45	45	45	24				24	52	46	48
25	38	38	38	25	45	45	45	25				25	52	46	48
26	38	38	38	26	46	45	45	26				26	52	46	48
27	39	39	39	27	46	45	45	27				27	52	46	48
28	39	39	39	28	45	45	45	28				28	52	46	48
29	39	39	39					29				29	52	46	48
30	39	39	39					30				30***	52	46	48
31	39	39	39					31							

** Data gap - Thermograph malfunction
*** Readings discontinued

CLIMATOLOGICAL DATA

(NORMAL)

MONTH	TEMPERATURE			PRECIPITATION		WIND	
	Daily Max.	Daily Min.	Monthly	Normal Total	Max. Snow Fall	Mean Hourly Speed	Prevailing Direction
Jan.	38.6	25.3	32.0	1.60	41.6	8.5	SE
Feb.	46.5	31.3	38.9	1.07	15.8	8.9	SE
Mar.	53.2	34.3	43.8	1.00	4.9	10.0	W
Apr.	61.9	39.8	50.9	1.01	1.9	10.6	W
May	70.4	46.5	58.5	1.24	T	10.2	W
June	78.3	52.8	65.6	1.01	0.0	10.5	W
July	88.2	58.8	73.5	0.26	0.0	9.6	W NW
Aug.	85.5	57.5	71.5	0.34	0.0	9.2	SE
Sept.	56.9	51.1	64.0	0.64	0.0	9.0	SE
Oct.	63.4	41.8	52.6	1.11	3.2	8.1	SE
Nov.	48.9	33.8	41.4	1.50	9.2	8.0	SE
Dec.	41.8	29.6	35.7	1.53	12.6	8.5	SE
Annual	62.8	41.9	52.4	12.31	41.6	9.3	SE

AVERAGE RELATIVE HUMIDITY

Time:

0400	70
1000	55
1600	48
2200	63

Station: Pendleton, Oregon

CLIMATOLOGICAL DATA

(EXTREMES)

MONTH	TEMPERATURE			PRECIPITATION		WIND	
	Daily Max.	Daily Min.	Monthly	Max. Monthly	Min. Monthly	Max. Speed	Direction
Jan.	68	-22		3.92	0.21	49	270
Feb.	68	-18		3.03	0.07	54	250
Mar.	79	10		2.31	0.24	63	290
Apr.	89	18		2.45	0.01	77	270
May	99	25		3.02	0.03	48	270
June	108	36		2.70	0.12	62	290
July	110	42		1.26	T	46	280
Aug.	113	41		1.60	0.00	40	270
Sept.	102	30		2.34	T	47	270
Oct.	86	11		2.79	0.04	49	250
Nov.	74	-6		3.76	0.04	62	270
Dec.	67	-13		4.68	0.27	63	290
Annual	113	-22		4.68	0.00	77	270

RELATIVE HUMIDITY

Time:	High	Low
0400	81	53
1000	77	33
1600	78	22
2200	80	37

Station: Pendleton, Oregon

53

UNITED STATES GOVERNMENT

Memorandum

FISH AND WILDLIFE SERVICE
PORTLAND, OREGON

ENGINEERING	
ANDERS	DGE
BERGREN	OYEN
CHEEVER	POE
FAST	RAINEY
GRAHAM	ROTHROCK
HARDMAN	SCHMIDT
HOLMES	STRIPLIN
JOHNSON	WAGNER
KERNAN	WAHLIN
MEVEIN	WEITZ
	FILE
DATE REC'D	

TO :Engineering Program Manager
Fish and Wildlife Service
Portland, Oregon

FROM Senior Staff Realty Officer

DATE: February 20 1980

SUBJECT: Land Status for Feasibility Study of Proposed Fish Hatcheries at Umatilla Indian Reservation

LA-Oregon
Proposed Umatilla
Fish Hatchery

This is in reference to your memo of January 24, 1980, wherein you requested an evaluation of land ownership for two possible hatchery sites within the Umatilla Indian Reservation. The areas requested are located in T, 2 N., R, 36 E, W. M., Section 6, for the Bonifer Springs site; and in T. 2 N., R. 34 E., Section 7, for the Minthorn Springs site. The Umatilla County Tax Assessor's Office supplied us with the following information.

Bonifer Springs site

Tax Lot 500: U, S. Dept. of the Interior
Bureau of Indian Affairs

Tax Lot 600: William C, & Rosalie Tubbs
252 Paulsen Building
Spokane, Washington 99200

Tax Lot 700: Clarence G. & Lois Tubbs
Adams, Oregon

Tax Lot 800: Robert M. & Darlene Z. Hoskins

Tax Lot 900: F. Hubert Mingle & Rosemary S. Gladow,
'1717 S. W, Park Ave./Apt. #l005
Portland, Oregon 97201

Tax Lot 1000: Clarence G. & Lois Tubbs
Adams, Oregon

Tax Lot 1100: U. S. Dept. of the Interior
Bureau of Indian Affairs

Minthorn Spring site

Tax Lot 2800: U, S. Department of the Interior
Bureau of Indian Affairs

Tax Lots 3000 and 3100:	Esther K. Temple 417 N. W. 9th Pendleton, Oregon 97801
Tax Lot 3101:	Lydia Kaye C/O Esther K. Temple 417 N. W. 9th Pendleton, Oregon 97801
Tax Lot 3200:	Clinton C. and Katherine Case Route 1, Box 180-A Pendleton, Oregon 97801

Attached are copies of partial tax plats with the preceeding ownerships marked upon them. Also attached is a Land Index, supplied by the Bureau of Indian Affairs @IA), which lists the individuals for whom the BIA lands are held in trust.

Judging from your Drawing No. IF-MISC-248-10, it would appear that the Bonifer Springs site lies within Tax Lot 900, owned by F. Hubert Mingle and Rosemary S, Gladow, Your drawing, NO. IF-MISC-249-1.0, places the Minthorn site upon BIA lands.

If you have any further questions about any of this, please call Geoffrey Haskett, extension 6205.

3

I- Larry C. Coe

Enclosures

GHaskett:dls

T. 2 N. R. 36 E., W. M., SECTION 6

BONIFER SPRINGS SITE

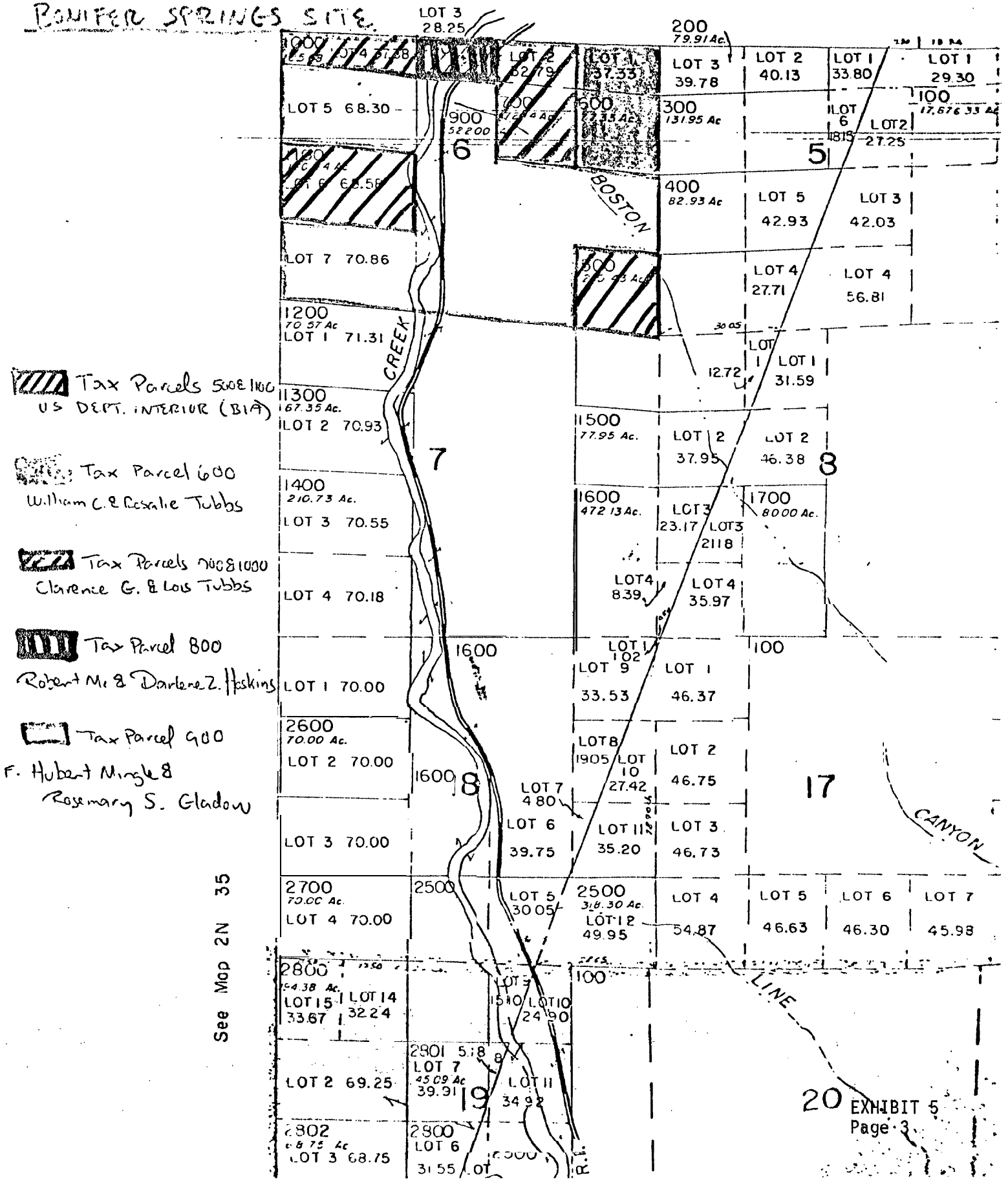

EXHIBIT 5
Page 3

INTERIM SPECIAL SITE

T. 2 N., R. 34 E., W.M., SECTION 7

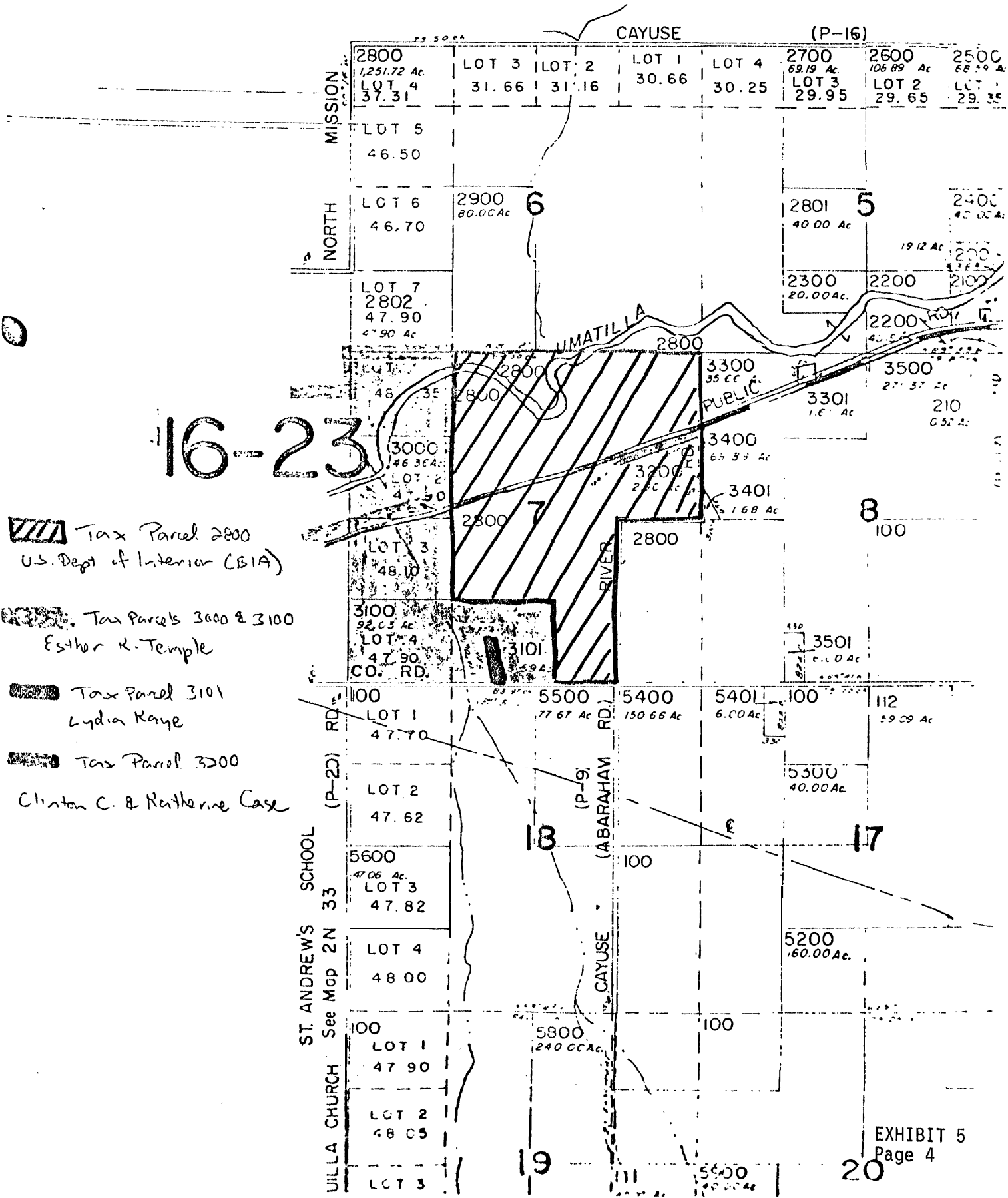

EXHIBIT 5
Page 4

LAND INDEX

DEPARTMENT OF THE INTERIOR
BUREAU OF INDIAN AFFAIRS

EXHIBIT 5
Page 5

SECTION	TWP	RANGE	MER	COUNTY	STATE	RES CODE
6	2N	36E	WM	UMATILLA	ORE	143 8

UMATILLA

PAGE NO. 1

		NE ¼	NW ¼	SW ¼	SE ¼	ACRES	TRACT NUMBER	DOCUMENT TYPE	DOCUMENT NUMBER	DATE MO DAY YEAR	RES CODE	IDENTIFICATION NO	GRANTOR/DECEDENT : GRANTEE/HEIRS NAMES	GG	REL	REMARKS/FRACTIONAL INTEREST NUMERATOR	DENOMINATOR
17917	S	2X		X	X X			13	65--	08261881			SECRETARY OF INTERIOR		1	100-FT RR R/W	1
	A												OREGON RY + NAVGATION CO		4		1
	B																
11175	P	1 X				77.33	779	20		09241920							
	A																1
	B										143	779	BELVA WILLIAMS		3		1
11179	P			X	X	80.00	783	20		09241920							
	A																1
	B										143	783	HARLE ROBIE		3		1
11180	P				XX	80.00	784	20		09241920							
	A																1
	B										143	784	ROYAL ROBIE		3		1
11181	P	2X				72.79	785	20		09241920							
	A																1
	B										143	785	NANCY C ROBIE		3		1
11182	P		3			28.25	786	20		09241920							
	A																1
	B										143	786	VIRGINIA L ROBIE		3		1
11468	P			X	X	80.00	1080	20		09241920						SJ RR R/W	
	A																1
	B										143	1080	DAVID MCWHIRK		3		1
11499	Q				X	40.00	1113	20		09241920							
	A																1
	B										143	1113	ROSEMARY STRUGIS		3		1
16734	Q				X	40.00	1113	01	4275--	12131920							
	A												U S		1		1
	B										143	1113	ROSEMARY STURGIS		3		1
16765	P			X	X	80.00	1080	01	4259--	12131920							
	A												U S		1		1
	B										143	1080	DAVID MCWHIRK		3		1
16794	P	2X				72.79	785	01	4250--	12131920							
	A												U S		1		1
	B										143	785	NANCY C ROBIE		3		1
16804	P			X	X	80.00	783	01	4246--	12131920							
	A												U S		1		1
	B										143	783	HARLE ROBIE		3		1

THIS SECTION CONTINUED ON NEXT PAGE

LEGEND

SYMBOLS

Land Description

x full ¼ ¼ sec
0 Partial ¼ ¼ sec , or Govt Lots numbered 10 and above or multiple Govt lots in ¼ ¼ sec
1-9 Govt Lots
* Outside Reservation

CODES

Type Documents

01 Trust Patent
02 Restricted Fee Patent
03 Deed to Non-Trust Status
04 Executive Order
05 Treaty
06 Acts of Congress
07 Secretarial Order
08 Order Transferring Inherited Interests
09 Deed to Restricted Status
10 Deed to Trust Status
11 Probate
12 Probate Modification
13 Easement
14 Supplemental Plat
15 Mortgage
16 Fee Patent
17 Homestead Patent
18 Certificate of Competency
19 Order Removing Restrictions
20 Allotment Schedule
21 Declarations of Taking
22 Mortgage Satisfaction
23 Lease
24 Memorandum of Sale of Allotted Land (Deferred Payment Contract)
25 Federal Revesting Order
26 Miscellaneous
27 Title Status Report

Ownership of Tribal or Government-owned land (in column designated "Identification No.")

xxx 10 Tribal - Original
xxx 20 " - Reserve
xxx 30 " - Accumulation of Alloted Lands
xxx 40 " - Purchased in Trust with Tribal Funds
xxx 50 " - Purchased in Trust with Appropriated Funds (I R A)
xxx 52 " - Other
xxx 55 - Owned in Fee
xxx 60 Government Owned - School
xxx 61 " " - Sub Marginal
xxx 62 " " - Other

xxx Tribal Code Prefix

Grantor/Grantee (in column designated "GG")

1 Grantor - Non Indian
2 Grantor - Indian
3 Grantee - Indian
4 Grantee - Non Indian
5 Grantor/Grantee - Indian Owning or Acquiring Interest in Fee
6 Grantor/Grantee - Indian Tribe Owning or Acquiring Interest in Fee
7 Grantor Grantee - Terminated Indian
9 Remarks

Relationship

F Father
M Mother
W Wife
H Husband
C Child
O Other

LAND INDEX

DEPARTMENT OF THE INTERIOR
BUREAU OF INDIAN AFFAIRS

SECTION	TWP	RANGE	MER	COUNTY	STATE	RES CODE
6	2N	36E	WM	UMATILLA	ORE	143 0 UMATILLA

PAGE NO 2

		NE ¼ N N S S E W E	NW ¼ N N S S E W E	SW ¼ N N S S E W E	SE ¼ N N S S E W E	ACRES	TRACT NUMBER	DOCUMENT TYPE	DOCUMENT NUMBER	DATE MO DAY YEAR	RES CODE	IDENTIFICATION NO	GRANTOR/DECEDENT : GRANTEE/HEIRS NAMES	GRANTOR/DECEDENT : GRANTEE/HEIRS NAMES	REMARKS/FRACTIONAL INTEREST NUMERATOR	REMARKS/FRACTIONAL INTEREST DENOMINATOR
6806	P				X X	8000	784	01	4248	12131920			U S	1	1	1
	A										143	784	ROYAL ROBIE	3	1	1
	B															
6834	P		3			2825	786	01	4252	12131920			U S	1	1	1
	A										143	786	VIRGINIA L ROBIE	3	1	1
	B															
6842	P	1 X				7733	779	01	4244	12131920			U S	1	1	1
	A										143	779	BELVA WILLIAMS	3	1	1
	B															
1659	Q			7		7086	1283	20		05021921						1
	A										143	1283	WILLIAM H ROBIE	3	1	1
	B															
5805	P			X	X	8000	783	16	4247	06081921			U S	1	1	1
	A										143	783	HARLE ROBIE	3	1	1
	B															
5646	Q			7		7086	1283	01	4429	07061921			U S	1	1	1
	A										143	1283	WILLIAM H ROBIE	3	1	1
	B															
5431	Q			7		7086	1283	11	655862	10913 1921						
	A										143	1283	WILLIAM H ROBIE	2		1
	B										143	783	HARLE ROBIE	3F		1
	C										143	809	RACHEL REED ROBIE	3M		1
5843	P	1 X				7733	779	16	4245	06291922			U S	1	1	1
	A										143	779	BELVA WILLIAMS	3	1	1
	B															
5766	P		X	X		8000	1080	16	4260	07171922			U S	1	1	1
	A										143	1080	DAVID MCWHIRK	3	1	1
	B															
480	Q				X	4000	1113	11	842702	31114 1923						
	A										143	1113	ROSEMARY STURGIS	2		1
	B										143	WW43	SAM STURGIS (AKATHTOINMI	3F		1
	C										143	WW456	JULIA ANN (J A STURGIS)	3M		1
771	P		45			10568	1405	20		07061925						
	A										143	1405	DONNA LEA HANDRAN	3		1
	B															
783	P			6		6958	1417	20		07061925						

THIS DOCUMENT CONTINUED ON NEXT PAGE

N N S S E W A T N N S S E W E N N S S E W E N N S S E W E

LEGEND

SYMBOLS

Land Description

- s full ¼ ¼ sec
- 0 Partial ¼ ¼ sec , or Govt Lots numbered 10 and above or multiple Govt lots in ¼ ¼ sec
- 1-9 Govt Lots
- * Outside Reservation

CODES

Type Document

- 01 Trust Patent
- 02 Restricted Fee Patent
- 03 Deed to Non-Trust Status
- 04 Executive Order
- 05 Treaty
- 06 Acts of Congress
- 07 Secretarial Order
- 08 Order Transferring Inherited Interests
- 09 Deed to Restricted Status
- 10 Deed to Trust Status
- 11 Probate
- 12 Probate Modification
- 13 Easement
- 14 Supplemental Plat
- 15 Mortgage
- 16 Fee Patent
- 17 Homestead Patent
- 18 Certificate of Competency
- 19 Order Removing Restrictions
- 20 Allotment Schedule
- 21 Declarations of Taking
- 22 Mortgage Satisfaction
- 23 Lease
- 24 Memorandum of Sale of Allotted Land (Deferred Payment Contract)
- 25 Federal Revesting Order
- 26 Miscellaneous
- 27 Title Status Report

Ownership of Tribal or Government-owned land (in column designated "Identification No")

- xxx 10 Tribal Original
- xxx 20 " Reserve
- xxx 30 " Acquisition of Alloted Lands
- xxx 40 " Purchased in Trust with Tribal Funds
- xxx 50 " Purchased in Trust with Appropriated Funds (IRA)
- xxx 52 Other
- xxx 55 Owned in Fee
- xxx 60 Government-Owned School
- xxx 61 " " Sub-Marginal
- xxx 62 " " Other

xxx Tribal Code Prefix

Grantor/Grantee (in column designated "GG")

- 1 Grantor - Non-Indian
- 2 Grantor - Indian
- 3 Grantee - Indian
- 4 Grantee - Non Indian
- 5 Grantor/Grantee Indian Owning or Acquiring Interest in Fee
- 6 Grantor/Grantee Indian Tribe Owning or Acquiring Interest in Fee
- 7 Grantor/Grantee Terminated Indian
- 9 Remarks

Relationship

- F Father
- M Mother
- W Wife
- H Husband
- C Child
- O Other

LAND INDEX

DEPARTMENT OF THE INTERIOR
BUREAU OF INDIAN AFFAIRS

SECTION	TWP	RANGE	MER	COUNTY	STATE	RES CODE
6	2N	36E	WM	UMATILLA	ORE	143 0

UMATILLA

PAGE NO 3

		NE ¼	NW ¼	SW ¼	SE ¼	ACRES	TRACT NUMBER	DOCUMENT TYPE	DOCUMENT NUMBER	DATE MO DAY YEAR	RES CODE	IDENTIFICATION NO	GRANTOR/DECEDENT : GRANTEE/HEIRS NAMES	GQ	REMARKS/FRACTIONAL INTEREST NUMERATOR	DENOMINATOR
	A														1	
	B										143	1417	AUDREY J BILL	3	1	
5782	P			6		6958	1417	01	4289	--08071925						
	A												U S	1	1	
	B										143	1417	AUDREY J BILL	3	1	
5785	P		45			10568	1405	01	4286	--08071925						
	A												U S	1	1	
	B										143	1405	DONNA LEA HANDRAN	3	1	
5537	P			6		6958	1417	11	10339	2604021926						
	A										143	1417	AUDREY J BILL	2	1	
	B										143	739	PHILIP BILL	3F	1	
	C										143	1008	DORCAS MINTHORN BILL	3M	1	
7822	R				X	4000	1113	11	581722	7050319 28					BY WILL	
	A										143	WW456	JULIA ANN STURGIS	2	1	
	B										124	N5055	LAME JIM	3F	1	
5807	P				XX	8000	784	16	4249	--07261932						
	A												U S	1	1	
	B										143	784	ROYAL ROBIE	5	1	
7782	X				X	4000	1113	11	32410	3906211939						
	A										124	N5055	LAME JIM (AHSANOOT)	2	1	
	B										124	N5057	JENNIE GEORGE	30	1	
5784	P		45			10568	1405	16	4287	--12221947						
	A												U S	1	1	
	B										143	1405	DONNA LEA HANDRAN	5	1	
5793	P	2X				7279	785	16	4251	--12221947						
	A												U S	1	1	
	B										143	785	NANCY C ROBIE	5	1	
168	P		3			2825	786	10	224	--04031951						
	A										143	786	VIRGINIA L R LINDSAY	2	1	
	B										143	780	WAYNE J WILLIAMS	3	1	
7596	Q			7		7086	1283	11	908540	1151954						
	A										143	783	HARLE H ROBIE	2	1	
	B										143	784	ROYAL H ROBIE	30	1	
	C										143	785	NANCY ROBIE	30	1	
	D										143	786	VIRGINIA ROBIE L COFFMAN	30	1	
835	P		3			2825	786	16	4253	--09201960						
	A												U S	1	1	

THIS DOCUMENT CONTINUED ON NEXT PAGE

LEGEND

SYMBOLS

Land Description

x Full ¼ ¼ sec
0 Partial ¼ ¼ sec., or Govt Lots numbered 10 and above or multiple Govt lots in ¼ ¼ sec
1-9 Govt Lots
* Outside Reservation

CODES

Type Document

01 Trust Patent
02 Restricted Fee Patent
03 Deed to Non Trust Status
04 Executive Order
05 Treaty
06 Acts of Congress
07 Secretarial Order
08 Order Transferring Inherited Interests
09 Deed to Restricted Status
10 Deed to Trust Status
11 Probate
12 Probate Modification
13 Easement
14 Supplemental Plat
15 Mortgage
16 Fee Patent
17 Homestead Patent
18 Certificate of Competency
19 Order Removing Restrictions
20 Allotment Schedule
21 Declarations of Taking
22 Mortgage Satisfaction
23 Lease
24 Memorandum of Sale of Allotted Land (Deferred Payment Contract)
25 Federal Revesting Order
26 Miscellaneous
27 Fate Status Report

Ownership of Tribal or Government-owned land (in column designated "Identification No.")

xxx 10 Tribal Original
xxx 20 " Reserve
xxx 30 " Acquisition of Alloted Lands
xxx 40 Purchased in Trust with Tribal Funds
xxx 50 " Purchased in Trust with Appropriated Funds (I.R.A.)
xxx 52 Other
xxx 55 Owned in Fee
xxx 60 Government Owned School
xxx 61 " " Sub-Marginal
xxx 62 " " Other

xxx Tribal Code Prefix

Grantor/Grantee (in column designated "GQ")

1 Grantor Non Indian
2 Grantor Indian
3 Grantee Indian
4 Grantee Non Indian
5 Grantor/Grantee Indian Owning or Acquiring Interest in Fee
6 Grantor/Grantee Indian Tribe Owning or Acquiring Interest in Fee
7 Grantor/Grantee Terminated Indian

9 Remarks

Relationship

F Father
M Mother
W Wife
H Husband
C Child
O Other

LAND INDEX

DEPARTMENT OF THE INTERIOR
BUREAU OF INDIAN AFFAIRS

SECTION	TWP	RANGE	MER	COUNTY	STATE	RES CODE
6	2N	36E	WM	UMATILLA	ORE	143 0 UMATILLA

PAGE NO

		NE ¼ N N S S E W E E	NW ¼ N N S S E W W E	SW ¼ N N S S E W W E	SE ¼ N N S S E W W E	ACRES	TRACT NUMBER	DOCUMENT TYPE	DOCUMENT NUMBER	DOCUMENT DATE NO DAY YEAR	GNTOR/DECEDENT : GRANTEE/HEIRS RES CODE	IDENTIFICATION N	NAMES	GGR	REMARKS/FRACTIONAL INTEREST NUMERATOR	DENOMINATOR
	B												WAYNE J WILLIAMS	4	1	1
	C													9	SJ RR R/W	
7789	BQ				X	4000	1113	11	1192650093019	60						
	A										124	N5057	JENNIE GEORGE WILLIE	2	1	2
	B										124	U4684	GUS GEORGE	30	1	1
	C										124	U4685	HENRY GEORGE	30	1	4
	D										124	N5060	JIMMY GEORGE	30	1	4
	E										124	U5464	JACK GEORGE	30	1	4
3063	W				X	4000	1113	11	E 3463032019	63						
	A										124	N5060	JIMMIE GEORGE	2	1	8
	B										124	U4149	LEROY W GEORGE	30	1	2
	C										124	U4151	SANDERS GEORGE	30	1	2
	D													9	SJ DOWER RIGHT	
3061	W				X	4000	1113	11	E 2506312311	963						
	A										124	U4684	GUS GEORGE	2	1	8
	B										124	U290	LEVI GEORGE	30	1	10
	C										124	U913	BUSTER GEORGE	30	1	10
	D										124	U292	VICTOR GEORGE	30	1	10
	E										124	U914	MABEL GEORGE SHIKE	30	1	10
	F										124	U289	JUANITA GEORGE MILLER	30	1	10
	G										124	U915	EVELYN GEORGE SMARTLOWAT	30	1	10
	H										124	U291	MAVIS GEORGE	30	1	10
	I										124	U916	ISABELL GEORGE COLWASH	30	1	10
	J										124	U917	VIVIAN GEORGE	30	1	10
	K										124	U4574	RANDY GEORGE	30	1	10
	L													9	SJ DOWER RIGHT	
3435	Q				X	4000	1113	11	E 9769072919	69						
	A										143	WW43	SAM STURGIS	2	1	2
	B										124	U3393	REGINA GEORGE (WHEELER)	30	1	1
	C													9	BY WILL	
1761	V			6		6958	1417	11	P0062L7601191	976						
	A										143	739	PHILLIP BILL	2	1	2
	B										143	U234	BERNICE NEZ	30	1	10
	C										143	U8	VEVA BILL	30	1	10
	D										143	U432	DONNA NIKOLAIDE	30	1	10
	E										143	U486	PHYLLIS BILL	30	1	10
	F										143	U354	RAPHAEL BILL	30	1	10
	G										143	1297	PHILLIP L BILL JR	30	1	10
	H										143	1334	KENNETH A BILL	30	1	10
	I										143	U195	IVAN I BILL	30	1	10
	J										143	U293	HENRY BILL	30	1	10
	K										143	U712	PHILLIP LOUIS JACKSON	30	1	10
	L													9	+L SJ LIFE EST	

THIS SECTION CONTINUED ON NEXT PAGE

LEGEND

SYMBOLS

Land Description

x Full ¼ ¼ sec
0 Partial ¼ ¼ sec , or Govt Lots numbered 10 and above or multiple Govt lots in ¼ ¼ sec
1-9 Govt Lots
* Outside Reservation

CODES

Type Document

01 Trust Patent
02 Restricted Fee Patent
03 Deed to Non Trust Status
04 Executive Order
05 Treaty
06 Acts of Congress
07 Secretarial Order
08 Order Transferring Inherited Interests
09 Deed to Restricted Status
10 Deed to Trust Status
11 Probate
12 Probate Modification
13 Easement
14 Supplemental Plat
15 Mortgage
16 Fee Patent
17 Homestead Patent
18 Certificate of Competency
19 Order Removing Restrictions
20 Apportment Schedule
21 Declarations of Taking
22 Mortgage Satisfaction
23 Lease
24 Memorandum of Sale of Allotted Land (Deferred Payment Contract)
25 Federal Revesting Order
26 Miscellaneous
27 Tribe Status Report

Ownership of Tribal or Government-owned land (in column designated "Identification No.")

xxx 10 Tribal Original
xxx 20 " Reserve
xxx 30 " Acquisition of Alloted Lands
xxx 40 " Purchased in Trust with Tribal Funds
xxx 50 " Purchased in Trust with Appropriated Funds (I R A)
xxx 52 Other
xxx 55 Owned in Fee
xxx 60 Government-Owned School
xxx 61 " " Sub Marginal
xxx 62 " " Other

xxx Tribal Code Prefix

Grantor/Grantee (in column designated "GGR")

1 Grantor Non-Indian
2 Grantor Indian
3 Grantee Indian
4 Grantee Non Indian
5 Grantor/Grantee Indian Owning or Acquiring Interest in Fee
6 Grantor/Grantee Ind an Tribe Owning or Acquiring Interest in Fee
7 Grantor/Grantee - Terminated Indian

* Remarks

* Relationship

F Father
M Mother
W Wife
H Husband
C Child
O Other

LAND INDEX

DEPARTMENT OF THE INTERIOR
BUREAU OF INDIAN AFFAIRS

EXHIBIT 5
Page 9

SECTION	TWP	RANGE	MER	COUNTY	STATE	RES CODE
6	2N	36E	WM	UMATILLA	ORE	143 0

UMATILLA

PAGE NO 5

	NE ¼ N½S½ E½W½E	NW ¼ N½S½ E½W½E	SW ¼ N½S½ E½W½E	SE ¼ N½S½ E½W½E	ACRES	TRACT NUMBER	DOCUMENT TYPE	DOCUMENT NUMBER	DATE MO DAY YEAR	RES CODE	IDENTIFICATION NO	GRANTOR/DECEDENT : GRANTEE/HEIRS NAMES	GG	REMARKS/FRACIONAL INTERES NUMERATOR	DENOMINATOR
.1039 X				X	40.00	1113	11	P0009L7	70525 1977						
A										124	U913	BUSTER GEORGE	2	1	80
B										124	U5040	MICHAEL GEORGE	3	1	5
C										124	U5041	MONTGOMERY GUS GEORGE	3	1	5
D										124	U5729	LEWIS SPENCER GEORGE	3	1	5
E										124	U6031	MONICA NAN GEORGE	3	1	5
F										124	U6596	ALINA RACHEL GEORGE	3	1	5
G													9	SJ DOWER RGT	
.1105 AP			6		69.58	1417	26	P0062L7	61110 1977						
A															
B													9	FINALITY NOTICE	
								POSTED AS OF 01/23/1978							
	XXXX	XXXX	XXXX	XXXX		T	26	5408	9 5 79	143	143 52	UMATILLA CONF TRIBES	2	1	1
												FOREST + RANGE CONTRACT	7	1	1
													9	TIMBER CONTRACT	
													1	EXPIRES 9-5-80	

SYMBOLS

Land Description

x full ¼ ¼ sec
0 Partial ¼ ¼ sec, or Govt Lots numbered 10 and above or multiple Govt lots in ¼ ¼ sec
1-9 Govt Lots
* Outside Reservation

CODES

Type Document

01 Trust Patent
02 Restricted Fee Patent
03 Deed to Non-Trust Status
04 Executive Order
05 Treaty
06 Acts of Congress
07 Secretarial Order
08 Order Transferring Inherited Interests
09 Deed to Restricted Status
10 Deed to Trust Status
11 Probate
12 Probate Modification
13 Easement
14 Supplemental Plat
15 Mortgage
16 Fee Patent
17 Homestead Patent
18 Certificate of Competency
19 Order Removing Restrictions
20 Allotment Schedule
21 Declarations of Taking
22 Mortgage Satisfaction
23 Lease
24 Memorandum of Sale of Allotted Land (Deferred Payment Contract)
25 Federal Revesting Order
26 Miscellaneous
27 Title Status Report

Ownership of Tribal or Government-owned land (in column designated Identification No.)

xxx 10 Tribal Original
xxx 20 " Reserve
xxx 30 " Acquisition of Alloted Lands
xxx 40 " Purchased in Trust with Tribal Funds
xxx 50 " Purchased in Trust with Appropriated Funds (I.R.A.)
xxx 52 Other
xxx 55 Owned in Fee
xxx 60 Government Owned School
xxx 61 " " Sub-Marginal
xxx 62 " " Other

xxx Tribal Code Prefix

1 ~~Grantor/Grantee~~ (in column designated "GG")

1 Grantor Non Indian
2 Grantor Indian
3 Grantee Indian
4 Grantee Non-Indian
5 Grantor, Grantee Indian Owning or Acquiring Interest in Fee
6 Grantor/Grantee Indian Tribe Owning or Acquiring Interest in Fee
7 Grantor/Grantee Terminated Indian

9 Remarks

Relationship

F Father
M Mother
W Wife
H Husband
S Son
D Daughter

LAND INDEX

DEPARTMENT OF THE INTERIOR
BUREAU OF INDIAN AFFAIRS

TOWN	TWP	RANGE	MER	COUNTY	STATE	TRIBE
7	2N	34E	WM	UMATILLA	ORE	143 0 UMATILLA

PAGE NO 1

EXHIBIT 5
Page 10

		NE	NW	SW	SE	ACRES	TRACT NUMBER	TRIBE	DOCUMENT NUMBER	DATE MO DAY YEAR	DOC TYPE	IDENTIFICATION NO	GRANTOR/DECEDENT NAMES	GRANTEE/HEIRS NAMES	CODE	REMARKS: FRACTIONAL INTEREST NUMERATOR	DENOMINATOR
07917	AW A R	X XX	XXXX	3				13	65--08261881				SECRETARY OF INTERIOR OREGON RY + NAVGATION CO	1 4	100-FT RR R/W 1 1	1 1	1 1
00081	P A R	XX				8000	C100	20	04121893		143	C100	INNAHAPE	3	1 1	1 1	1 1
00082	P A R	X X				8000	C101	20	04121893		143	C101	INZAZINATWAA (OLD BIRD)	3	1 1	1 1	1 1
00107	O A R		X			4000	C131	20	04121893		143	C131	PALANOTKIAKIA	3	1 1	1 1	1 1
00122	P A R			X		4000	C150	20	04121893		143	C150	KAPSISEWATIM	3	1 1	1 1	1 1
00184	P A R				4X	8790	C232	20	04121893		143	C232	MACHLOWIS (SARAH)	3	1 1	1 1	1 1
00185	P A R		12			XX	17620	C233	20	04121893	143	C233	HOOITSOOT	3	1 1	1 1	1 1
00205	P A R			X3			8810	C257	20	04121893	143	C257	ALAKATWELASHONMI	3	1 1	1 1	1 1
00293	P A R				X	X	8000	C369	20	04121893	143	C369	SHAMOX (ENOCH JOHNSON)	3	1 1	1 1	1 1
02493	O A R		X				4000	C131	01	1263--09161899	143	C131	U S PALANATKIA	1 3	1 1	1 1	1 1
03204	P A R			X			4000	C150	01	2180--09161899	143	C150	U S KAPSISEWATIM	1 3	1 1	1 1	1 1
03222	P A R	X X					8000	C101	01	2154--09161899	143	C101	U S INZAZINATWAI (OLD BIRD)	1 3	1 1	1 1	1 1

THIS SECTION CONTINUED ON NEXT PAGE

LEGEND

SYMBOLS

Land Description

CODES

Ownership

Grantor Grantee

Relationship

LAND INDEX

BUREAU OF INDIAN AFFAIRS

7 2N 34E WM UMATILLA ORE 143 0 UMATILLA

EXHIBIT 5
Page 11

		N/S	E/W	N/S	E/W	N/S	E/W	ACRES	TRACT NUMBER	DOCUMENT TYPE	DOCUMENT NUMBER	DATE MO DAY YR	GRANTOR/DECEDENT RES	IDENTIFICATION	GRANTEE/HEIRS NAMES		REMARKS FRACTIONAL INTEREST NUMERATOR	DENOMINATOR
03225	P	XX						8000	C100	01	2153	--09161899			U S	1	1	1
	A												143	C100	INNAHAPE	3	1	1
	R																	
03708	P				4X			8790	C232	01	2205	--09161899			U S	1	1	1
	A												143	C232	NACHLOWIS (SARAH)	3	1	1
	R																	
03709	P		12			XX		17620	C233	01	2207	--09161899			U S	1	1	1
	A												143	C233	HOOITSOOT	3	1	1
	R																	
03712	P			X3				8810	C257	01	2219	--09161899			U S	1	1	1
	A												143	C257	ALAKATWELASHONMI	3	1	1
	R																	
03751	P					X	X	8000	C369	01	2236	--09161899			U S	1	1	1
	A												143	C369	ENOCH JOHNSON (SHAMAX)	3	1	1
	R																	
07950	ET				4X		XX			13	39574	09040219 10			SECRETARY OF INTERIOR	1	1	1
	A														UMATILLA COUNTY	4	1	1
	R																	
	C															9	60-FT BIA RD RS/W	
	D															9	TRANSFRC TO CO SJ	
	E															9	SO 8-2-06 AS MOD	
	F															9	BY SO 7-29-1910	
04886	P				4X			8790	C232	11	69106	13091919 13						
	A												143	C232	NACHLOWIS	2	1	1
	R												182	31	MARY PARNELL	3C	1	1
04975	P		X					4000	C150	11	35343	14041819 14						
	A												143	C150	KAPSISEWATIM	2	1	1
	R												143	C56	ATEMITSHIKPA	3M	1	4
	C												143	WW156	JOE WILLIAMS	3O	1	4
	D												143	WW157	PETEEN JOHNSON	3O	1	4
	E												143	914	CARRIE JOHNSON	3D	1	4
04887	P		12			XX		17620	C233	11	74091	13043019 14						
	A												143	C233	JACK HOOITSOOT	2	1	1
	R												182	31	MARY PARNELL	3D	1	1
05004	P	X	X					8000	C101	11	32496	14050819 14						
	A												143	C101	INZAZINATWAI	2	1	1
	R												143	C90	TINTINMEETSA	3C	1	4
	C												143	C100	INNAHAPE	3C	1	4

THIS DOCUMENT CONTINUED ON NEXT PAGE

N/S E/W N/S E/W N/S E/W N/S E/W

Ownership of Tribal or Government Land (in column designated)

xxx 10 Tribal - Original
xxx 20 " - Reserve
xxx 30 " - Acquisition of Allotted Lands
xxx 40 " - Purchased in Trust with Tribal Funds
xxx 50 " - Purchased in Trust with Appropriated Funds (other)
xxx 52 Other
xxx 55 State Trust
xxx 60 Government-Owned: Federal
xxx 61 " State Margin
xxx 62 " Other

xxx Tribal Code Prefix

1 ~~Grantor/Grantee~~ (in column designated)

1 Grantor - Non Indian
2 Grantor - Indian
3 Grantee - Indian
4 Grantee - Non Indian
5 Grantor/Grantee - Indian Owning or Acquiring Interest in Fee
6 Grantor/Grantee - Indian Tribe Owning or Acquiring Interest in Fee
7 Grantor/Grantee - Terminated Indian
9 - Remarks

★ Relationship

F - Father
M - Mother
W - Wife
H - Husband
C - Child
O - Other

LAND INDEX

BUREAU OF INDIAN AFFAIRS

Township	Range	Meridian	County	State	Agency
7	2N	34E	WM UMATILLA	ORE	143 0 UMATILLA

PAGE 3

		Acres	Tract Number	Document Number	Date	Grantor/Decedent Identification No.	Grantee/Heirs Names	Remarks	Fractional Interest Numerator	Denominator
	D					143 C92	AMINKAYECHT	3C	1	4
	E					143 C96	BILLY CRAIG	3C	1	8
	F					143 C98	JOSEPH CRAIG	3C	1	8
04989	P	8000	C369	11	41043140514191 4			SJ DOWER RIGHT		
	A					143 C369	ENOCH JOHNSON SR	2	1	1
	B					143 1177	FRANK JOHNSON *	3C	214	432
	C					182 1595	RENA JOHNSON	3C	210	432
	D					143 913	LIZZIE WOOD *	3C	4	432
	E					143 UM200	MARY ST DENNIS *	3C	4	432
	F							9	*-SJ CURTESY RGT	
05209	P	8810	C257	11	71748141205191 4					
	A					143 C257	ALAKATWEL ASHONMI	2	1	1
	B					143 1091	TOKASHOFKINMI	3C	12	60
	C					143 C309	CAPTAIN SHUMKIN	3C	12	60
	D					143 C254	TALLAKATOWASONMI	3C	12	60
	E					124 1368	WONPIN	3C	12	60
	F					143 C108	GILBERT MINTHORN	3C	3	60
	G					143 C111	MARY JONES	3C	3	60
	H					143 N3027	ROY BLACKHAWK *	3C	2	60
	I					143 1069	YUTSELL BLACKHAWK *	3C	2	60
	J					143 1179	LOUISE BLACKHAWK *	3C	2	60
	K							9	* SJ DOWER RIGHT	
05182	Q	8810	C257	11	87701160923191 5					
	A					124 1368	ONEPENNEE	2	1	5
	B					124 1369	SWACUM ONEPENNEE	3W	3	9
	C					124 4193	SHICUT ONEPENNEE	3C	1	9
	D					124 1371	CLOMIAT ONEPENNEE	3C	1	9
	E					124 4555	TAMY ONEPENNEE	3C	1	9
	F					124 2977	EOWTITS ONEPENNEE	3C	1	9
	G					124 2978	LATLACLAH ONEPENNEE	3C	1	9
	H					124 3982	TILDA ONEPENNEE	3C	1	9
05183	P	8810	C257	12	87701160509191 7			SJ DOWER RGT		
	A					124 1368	ONEPENNEE	2	1	5
	B					124 4193	SHICUT ONEPENNEE	3C	1	6
	C					124 1371	CLOMIAT ONEPENNEE	3C	1	6
	D					124 4555	TAMY ONEPENNEE	3C	1	6
	E					124 2977	EOWTITS ONEPENNEE	3C	1	6
	F					124 2978	LATLACLAH ONEPENNEE	3C	1	6
	G					124 3982	TILDA ONEPENNEE	3C	1	6
	H							9	REDETRMIN HEIRS	
	I							9	TO OREGON PROP	
05221	O	8810	C257	11	56514170808191 7					
	A					143 N3027	ROY BLACKHAWK	2	2	60

THIS DOCUMENT CONTINUED ON NEXT PAGE

LEGEND

SYMBOLS

Land Description

A - full section
0 - Partial section or land lots mentioned
Wand above or a complete set follows
- See
T 9 Land Lots
* - Outside Reservation

CODES

Type of Document

01 Trust Patent
02 Restricted Fee Patent
03 Deed to Non-Trust Status
04 Executive Order
05 Treaty
06 Acts of Congress
07 Secretarial Order
08 Order Transferring Inherited Interests
09 Deed to Restricted Status
10 Deed to Trust Status
11 Probate
12 Probate Modification
13 Leasehold
14 Supplemental Plat
15 Mortgage
16 Tax Patent
17 Homestead Patent
18 Certificate of Competency
19 Court Decision, Directions
20 Allotment Schedule
21 Declaration of Taking
22 Mortgage Satisfaction
23 Deed
24 Memorandum of Sale of Allotted Land (Deferred Payment Contract)
25 Federal Housing Order
26 Miscellaneous
27 Title Status Report

Ownership of Tribal or Government owned land (in column designated Transaction No.)

xxx 10 Tribal - Original
xxx 20 " - Heirship
xxx 30 " - Acquisition of Allotted Lands
xxx 40 " - Purchased in Trust with Tribal Funds
xxx 50 " - Purchased in Trust with Appropriated Funds (DCA)
xxx 52 Other
xxx 55 - Owned in Fee
xxx 60 Government Owned School
xxx 61 " Sub Marginal
xxx 62 " Other

xxx Tribal Code Prefix

1 Grantor/Grantee (in column designated Tr.)

1 Grantor - Non Indian
2 Grantor - Indian
3 Grantee - Indian
4 Grantee - Non Indian
5 Grantor/Grantee - Indian Owning or Acquiring Interest in Fee
6 Grantor/Grantee - Indian Tribe Owning or Acquiring Interest in Fee
7 Grantor Grantee - Terminated Indian

9 - Remarks

* Relationship

F - Father
M - Mother
W - Wife
H - Husband
C - Child
O - Other

EXHIBIT 5
Page 12

LAND INDEX

BUREAU OF INDIAN AFFAIRS

Township	Range	Meridian	County	State	Reservation
7 2N	34E	WM	UMATILLA	ORE	143 0 UMATILLA

EXHIBIT 5
Page 13

		NE¼	NW¼	SW¼	SE¼	ACRES	TRACT NUMBER	DOCUMENT				GRANTOR/DECEDENT	GRANTEE/HEIRS			REMARKS-FRACTIONAL INTEREST		
								1991	NUMBER	MO	DAY	YEAR	HEIR CODE	IDENTIFICATION	NAMES		NUMERATOR	DENOMINATOR
	P												143	117	LOUISE BLACKHAWK	3D	1	2
	C												143	106	YUTSELL BLACKHAWK	3D	1	2
	D															9 SJ DO WER RGT		
05190	G	X	X			8000	C101	11	112821	06	26	1918						
	A												143	C9	BILLY CRAIG (WELATSKOSH)	2	1	8
	B												143	58	ISAAC CRAIG	3D	1	4
	C												143	58	JOHN CRAIG	3D	1	4
	D												143	59	MAUD CRAIG	3D	1	4
	E												143	59	NELLIE CRAIG	3D	1	4
05248	G	X	X			8000	C101	11	283481	80	52	1919						
	A												143	C9	TINTINMFETSA	2	1	4
	B												143	86	TAMASASAMI	3N	1	1
05267	G			X3		8810	C257	11	595191	80	70	21919						
	A												143	109	TOKASLOFKINMI	2	1	5
	B												143	C30	CAPTAIN SHUMPKIN	3D	1	2
	C												143	C25	TALLAKATAWASONMI	3D	1	2
05198	G	X	X			8000	C101	11	660592	01	00	81920						
	A												143	58	ISAAC CRAIG	2	1	32
	B												143	58	JOHN CRAIG	3D	1	3
	C												143	59	MAUDE CRAIG	3D	1	3
	D												143	59	NELLIE CRAIG	3D	1	3
04397	P		XX			8000	C100	11	119380	13	12	221920						
	A												143	C101	INNAHAPE	2	1	1
	B												143	C92	AMINKAYECHT	3D	4	8
	C												143	C91	JOSEPH CRAIG	3D	2	8
	D												143	58	JOHN CRAIG	3D	1	8
	E												143	590	MAUD CRAIG	3D	1	8
04397	G	X	X			8000	C101	11	119380	13	12	221920						
	A												143	C100	INNAHAPE	2	1	4
	B												143	C92	AMINKAYECHT	3D	4	8
	C												143	C91	JOSEPH CRAIG	3D	2	8
	D												143	58	JOHN CRAIG	3D	1	8
	E												143	590	MAUD CRAIG	3D	1	8
06571	G	X	X			8000	C101	11	219452	10	33	11921						
	A												143	591	NELLIE CRAIG	2	1	32
	B												143	589	JOHN CRAIG	3D	1	2
	C												143	590	MAUDE CRAIG	3D	1	2
06572	R	X	X			8000	C101	11	219452	10	33	11921						
	A												143	591	NELLIE CRAIG	2	1	96
	B												143	587	AGNES CRAIG	3N	1	1

THIS SECTION CONTINUED ON NEXT PAGE

NNSS EWWE NNSS EWWE NNSS EWWE NNSS EWWE

LEGEND

SYMBOLS

Land Status Indicator

A - Full Title
B - Partial Title - Partial Fee number 10 and above, or multiple Deed listing
1 - Deed Fee
* - Outside Reservation

Codes

Type of Patent

01 Trust Patent
02 Restricted Fee Patent
03 Deed to Non Trust Status
04 Executive Order
05 Treaty
06 Act of Congress
07 Secretarial Order
08 Order Transferring Inherited Interests
09 Deed to Restricted Status
10 Deed to Trust Status
11 Pre-Date
12 Probate Modification
13 Easement
14 Supplemental Plat
15 Mortgage
16 Fee Patent
17 Homestead Patent
18 Certificate of Competency
19 Order Removing Restrictions
20 Allotment
21 Declarations of Taking
22 Mortgage Satisfaction
23 Lease
24 Memorandum of Sale of Allotted Land Payment Contract
25 Federal Housing Order
26 Miscellaneous
27 Title Status Report

Ownership of Tribal or Government land (in column designated Identification No.)

xxx 10 Tribal - Original
xxx 20 " - Reserve
xxx 30 " - Acquisition of Allotted Lands
xxx 40 " - Purchased in Trust with Tribal Funds
xxx 50 " - Purchased in Trust with Appropriated Funds (BIA)
xxx 52 Other
xxx 55 Vacate 3 in Fee
xxx 60 Government Owned - School
xxx 61 " - Sale Margin
xxx 62 " - Other

xxx Tribal Code Prefix

1 ~~Grantor-Grantee~~ (in column designated

1 Grantor - Non Indian
2 Grantor - Indian
3 Grantee - Indian
4 Grantee - Non-Indian
5 Grantor/Grantee - Indian Owning or Acquiring Interest in Fee
6 Grantor/Grantee - Indian Tribe Owning or Acquiring Interest in Fee
7 Grantor/Grantee - Terminated Indian

9 - Remarks

* Relationship

F - Father
M - Mother
W - Wife
H - Husband
C - Child
O - Other

LAND INDEX

Section	Twp	Range	Mer	County	State	Tract	County
7	2N	34E	WM	UMATILLA	ORE	143	0 UMATILLA

PAGE NO. 5

EXHIBIT 5
Page 14

		NE¼ N½S½	NW¼ N½S½	SW¼ N½S½	SE¼ N½S½	ACRES	TRACT NUMBER	DOCUMENT Tract	DOCUMENT NUMBER	DATE MO DAY YEAR	GRANTOR/DECEDENT Rec. Code	GRANTOR/DECEDENT Identification No.	GRANTOR/DECEDENT NAMES	GRANTEE/HEIRS	FRACTIONAL INTEREST NUMERATOR	FRACTIONAL INTEREST DENOMINATOR	REMARKS
05277	QA	X X				8000	C101	11	239732	10 61 1921	143	862	TAMASASAMI	2	1	4	
	B										143	C103	ANNIE HAYES (WAWINTALET)	30	1	1	
06482	RA		X			4000	C150	11	106982	6 04 1926							
	B										143	WW157	PETEEN (PETEEN JOHNSON)	2	1	4	
	C										143	914	CARRIE JOHNSON	30	1	3	
	D										143	WW156	JOE WILLIAMS	30	1	3	
											143	WW160	JIM LUKE	30	1	3	
09672	RA		12		XX	17620	C233	11	380692	5 05 1927							
	B										182	31	MARY PARNELL	2	1	1	
	C										182	37	HARRIET PARNELL STUART	30	1	2	
											182	32	ANNIE PARNELL LITTLE	30	1	2	
09672	SA			4X		8790	C232	11	380692	5 05 1927							
	B										182	31	MARY PARNELL	2	1	1	
	C										182	37	HARRIET PARNELL STUART	30	1	2	
											182	32	ANNIE PARNELL LITTLE	30	1	2	
06369	QA			X3		8810	C257	11	113552	8 03 1928							
	B										143	C309	CAPTAIN SHAMKEEN (WATERS	2	3	10	
											143	586	PEWALOSONMI	3W	1	1	
03675	PA			4X		8790	C232	16	2206	--06 1928							
	B												U S	1	1	1	
											182	37	HARRIET PARNELL STUART	5	1	1	
03675	QA		2		0	5790	C233	16	2206	--06 1928					WWSWSE		
	B												U S	1	1	1	
											182	37	HARRIET PARNELL STUART	5	1	1	
03678	PA		1		X0	11830	C233-A	01	2208	--07 1928					ESWSE EWSWSE		
	B												U S	1	1	1	
	C										182	32	ANNIE PARNELL LITTLE	3	1	1	
														9	PARTITION		
05993	PA	0 0				300	C101	03	87	--10 1928					PT ENE M/B		
	B										143	C92	ANINKAYAYECHT	2	3	8	
													POLYDORE MOENS	4	1	1	
05994	PA	0 0				300	C101	03	87	--10 1928					PT ENE M/B		
	B										143	C103	WAWINTALET ET VIR	2	1	4	
													POLYDORE MOENS	4	1	1	
05995	PA	0 0				300	C101	03	87	--10 1928					PT ENE M/B		
											143	C98	JOSEPH CRAIG	2	3	16	

THIS DOCUMENT CONTINUED ON NEXT PAGE

SYMBOLS

Land Description

a Full Section

b Partial Section of Govt Subdivision or land above or multiple Govt Subdivisions

1-9 Govt Lots

* Outside Reservation

CODES

Type Document

01 Trust Patent
02 Restricted Fee Patent
03 Deed to Non Trust Status
04 Executive Order
05 Treaty
06 Acts of Congress
07 Secretarial Order
08 Order Transferring Inherited Interests
09 Deed to Restricted Status
10 Deed to Trust Status
11 Probate
12 Probate Modification
13 Easement
14 Supplemental Plat
15 Mortgage
16 Fee Patent
17 Homestead Patent
18 Certificate of Competency
19 Order Removing Restrictions
20 Allotment Schedule
21 Declarations of Taking
22 Mortgage Satisfaction
23 Deed
24 Modification of Sale of Allotted Land (Deferred Payment Contract)
25 Federal Housing Order
26 Miscellaneous
27 Title Status Report

Ownership of Tribal or Government land (in column designated "Identification No.")

xxx 10 Tribal - Original
xxx 20 " - Reserve
xxx 30 " - Acquisition of Allotted Lands
xxx 40 " - Purchased in Trust with Tribal Funds
xxx 50 " - Purchased in Trust with Appropriated Funds (BIA)
xxx 52 Other
xxx 55 - Other Fee
xxx 60 Government-Owned School
xxx 61 " Sub Map
xxx 62 " Other

xxx Tribal Code Prefix

Grantor Grantee (in column designated "Identification No.")

1 Grantor Non Indian
2 Grantor Indian
3 Grantee Indian
4 Grantee Non Indian
5 Grantor/Grantee Indian Owning Undivided Interest in Tract
6 Grantor/Grantee Indian Owning Undivided Interest in Tract
7 Grantor/Grantee Non Indian

9 Remarks

* Indicates Tribe

T Tribal
M Municipal
W Web
H Homestead
C Other
O Other

LAND INDEX

7 2N 34E WM UMATILLA ORE 143 0 UMATILLA

PAGE NO. 6

EXHIBIT 5
Page 15

																		POLYDORE MOENS	4	1	1
	B																				
05996	P	0	0					300	C101	03	87--10081928							PT ENE M/B			
	A											101	587	AGNES CRAIG ET VIR					2	1	96
	R													POLYDORE MOENS					4	1	1
05997	P	0	0					300	C101	03	87--10081928							PT ENE M/B			
	A											143	589	JOHN CRAIG					2	17	192
	R													POLYDORE MOENS					4	1	1
05998	P	0	0					300	C101	03	87--10081928							PT ENE M/B			
	A											143	590	MAUDE CRAIG					2	17	192
	R													POLYDORE MOENS					4	1	1
06585	O					X3		8800	C257	11	30506310605 1931										
	A											143	1069	ANTHONY BLACKHAWK					2	1	15
	R											143	U12	THERESA BLACKHAWK					3C	1	1
	C																	SJ DOWER RGT	9		
06577	R		XX					8000	C100	11	34125310820 1931										
	A											143	589	JOHN CRAIG					2	1	8
	R											143	587	AGNES CRAIG					3M	1	1
06577	S			X	X			8000	C101	11	34125310820 1931										
	A											143	589	JOHN CRAIG					2	17	192
	F											143	587	AGNES CRAIG					3M	1	1
06287	S					X3		8800	C257	11	31064320110 1933							DOC SHWS RNG 32			
	A											143	C254	ANN YOUNG CHIEF					2	1	5
	R											143	578	WINNIE K CRANE					3D	1	2
	C											143	823	LOUISE MARTIN LIBERTY					3D	1	2
06292	O			X				4000	C131	11	43771331028 1933										
	A											143	C131	JIM BADROADS					2	1	1
	R											143	521	WILLIAM BADROADS					3C	1	3
	C											143	522	ELIZABETH B SHILLAL					3C	1	3
	D											143	523	ROSIE B SHEOSHIPS					3C	1	3
	E																	SJ DOWER RIGHT	9		
06292	R					4	XXXX	7388	C313	11	43771331028 1933							SH D RE L4 + SESW			
	S																	SE C 18 + RNG 33			
	A											143	C131	JIM BADROADS					2	1	2
	B											143	521	WILLIAM BADROADS					3C	1	3
	C											143	522	ELIZABETH B SHILLAL					3C	1	3
	D											143	523	ROSIE B SHEOSHIPS					3C	1	3
	E																	SJ DOWER RIGHT	9		
06093	O				X			4000	C150	11	40863403191 934										

THIS DOCUMENT CONTINUED ON NEXT PAGE

LAND INDEX

BUREAU OF INDIAN AFFAIRS

TWP	RANGE	MERID	COUNTY	STATE	SECTION
2N	34E	WM	UMATILLA	ORE	143 0 UMATILLA

PAGE NO 7

EXHIBIT 5
Page 16

		NE ¼ N½S½ E½E½	NW ¼ N½S½ E½E½	SW ¼ N½S½ E½E½	SE ¼ N½S½ E½E½	ACRES	TRACT NUMBER	DOCUMENT TYPE	DOCUMENT NUMBER	DATE MO DAY YEAR	GRANTOR/DECEDENT TRIBE CODE	GRANTOR/DECEDENT IDENTIFICATION	GRANTEE/HEIRS NAMES	GRANTEE/HEIRS TRIBE CODE	REMARKS/FRACTIONAL INTEREST NUMERATOR	DENOMINATOR
	A										143	C56	ATEMITSHIKPA (TEMISS)	2	1	4
	B										143	WW156	JOE WILLIAMS	3C	1	1
	C													9	BY WILL	
09821	D	XX				8000	C100	11	9501315041	71935						
	A										143	C98	JOSEPH CRAIG	2	2	8
	B										182	1595	RENA JOHNSON CRAIG	3W	1	12
	C										182	N3109	DANIEL CRAIG	3C	1	12
	D										143	1120	ISABEL CRAIG	3C	9	12
	E										143	U311	VERONICA TIAS	3D	1	12
	F													9	BY WILL	
09821	W	0 0				7700	C101	11	9501315041	71935					PT ENE NOT SOLD	
	A										143	C98	JOSEPH CRAIG	2	3	16
	B										182	1595	RENA JOHNSON CRAIG	3W	1	12
	C										182	N3109	DANIEL CRAIG	3C	1	12
	D										143	1120	ISABEL CRAIG	3C	9	12
	E										143	U311	VERONICA TIAS	3D	1	12
	F													9	BY WILL	
07171	R			X3		8810	C257	11	9966350620	1935					SJ DOWER RIGHT	
	A										124	2977	EOWTITS (ELLEN) ONEPENNEE	2	1	30
	B										124	1369	SWACUM ONEPENNEE	3M	1	1
06094	R	0 0				7700	C101	11	6451341106	1935					PT ENE	
	A										143	C92	AMINKAYAYECHT	2	3	8
	B										143	926	PHILIP GUYER	3D	1	3
	C										143	927	ISABEL GUYER	3D	1	3
	D										143	928	LYDIA GUYER	3D	1	3
	E													9	BY WILL	
06094	S	XX				8000	C100	11	6451341106	1935						
	A										143	C92	AMINKAYAYECHT	2	1	2
	B										143	926	PHILIP GUYER	3D	1	3
	C										143	927	ISABEL GUYER	3D	1	3
	D										143	928	LYDIA GUYER	3D	1	3
	E													9	BY WILL	
06954	Q		X			4000	C150	11	7811736081	11936						
	A										143	WW156	JOE WILLIAMS (ASHTOOTOO)	2	7	12
	B										124	785	TOWHYAT WANTO(M WILLIAMS	3W	1	1
09677	R			X3		8810	C257	11	8908380331	1938					SJ DOWER RIGHT	
	A										143	1179	LOUISE BLACKHAWK (FRANK)	2	1	20
	B										182	N3415	ELSIE FRANK (RANKIN)	3C	1	3
	C										182	N3414	ESTELLA FRANK (JOHNLEY)	3C	1	3
	D										182	N3630	RACHEL FRANK	3C	1	3
	E													9	SJ CURTESY RIGHT	

THIS SECTION CONTINUED ON NEXT PAGE

LEGEND

SYMBOLS

Land Description

x full ¼ ¼ sec
0 Partial ¼ ¼ sec, or Govt Lots numbe 10 and above or multiple Govt lots i ¼ sec
1-9 Govt Lots
★ Outside Reservation

CODES

Type Encumbrance

01 Trust Patent
02 Restricted Fee Patent
03 Deed to Non Trust Status
04 Executive Order
05 Treaty
06 Acts of Congress
07 Secretarial Order
08 Order Transferring Inherited Interests
09 Deed to Restricted Status
10 Deed to Trust Status
11 Probate
12 Probate Modification
13 Easement
14 Supplemental Hat
15 Mortgage
16 Fee Patent
17 Homestead Patent
18 Certificate of Competency
19 Order Removing Restrictions
20 Allotment
21 Relocations of Family
22 Mortgage Satisfaction
23 Lease
24 Miscellaneous (Sale of Ancillary Interest Property, Probate, etc.)
25 Federal Reclamation Grants
26 Miscellaneous
27 Title Status Report

Change of Tribal or Government Land for Column designated Tribe No

xxx to Tribal Original
xxx 20 " Revised
xxx 30 " Partial Subject of Allotment
xxx 40 " Partial Allotted Trust with Tribal Interest
xxx 50 " Partial Allotted Trust with Non-Tribal Interest Partial (IRA)
xxx 52 " Other
xxx 55 " Other Tribal
xxx 60 Government Owned School
xxx 61 " Public Mortgage
xxx 62 " Other

xxx Tribal Code Prefix

Grantor/Grantee on column designated

1 Grantor Tribal Indian
2 Grantor Indian
3 Grantee Indian
4 Grantee - Tribal Indian
5 Grantor/Grantee Indian Owning or Acquiring Interest in Fee
6 Grantor/Grantee Indian Tribe Owning or Acquiring Interest in Fee
7 Grantor Grantee - Tribal Indian
9 - Remarks

★ Relationship

F - Father
M - Mother
W - Wife
H - Husband
C - Child
O - Other

LAND INDEX

EXHIBIT 5
Page 17

7 2N 34E WM UMATILLA ORE 143 0 UMATILLA

PAGE 6

		NE NW SW SE	ACRES	TRACT NUMBER	DOCUMENT TYPE	DOCUMENT NUMBER	DATE MO DAY YEAR	RES CODE	IDENTIFICATION NO	GRANTOR DECEDENT GRANTEE HEIRS NAMES		REMARKS FRACTIONAL INTEREST NUMERATOR	DENOMINATOR
09662	R	X3	8810	C257	11	14938290406 1938							
	A							143	586	PEWALOSONMI (MRS SUMPKIN	2	3	10
	B							143	C356	MITCHELL LLOYD	3D	1	2
	C							182	825	AGNES POWERS	3D	1	2
	D										9	BY WILL	
07177	Q	X3	8810	C257	11	10411381004 1938							
	A							143	C111	MARY JONES (BADROADS)	2	3	60
	B							143	521	WILLIAMS BADROADS	3C	1	3
	C							143	522	ELIZABETH BADROADS	3C	1	3
	D							143	523	ROSE BADROADS (SHEOSHIPS	3C	1	3
06963	T	XX	8000	C100	11	24850410527 1941							
	A							143	927	VERONICA GUYER	2	1	6
	B							143	U153	MARY JUNE RYAN	3C	1	2
	C							143	U324	BERNICE RYAN	3C	1	2
06963	U	0 0	7700	C101	11	24850410527 1941						PT ENE	
	A							143	927	VERONICA GUYER	2	1	8
	B							143	U153	MARY JUNE RYAN	3C	1	2
	C							143	U324	BERNICE RYAN	3C	1	2
07218	X	X3	8810	C257	11	45774410827 1941							
	A							124	1369	SWAQUM ONEPENNEE	2	1	30
	B							124	1371	CLOMIAT ONEPENNEE	3C	1	5
	C							124	4555	TAMY ONEPENNEE	3C	1	5
	D							124	2978	LATLACLAH ONEPENNEE	3C	1	5
	E							124	3982	TILDA ONEPENNEE	3C	1	5
	F							124	4193	SHIGUT ONEPENNEE	3C	1	5
06965	Q	X X	8000	C369	11	45764410906 1941						SJ DOWER RT	
	A							143	1177	FRANK E JOHNSON	2	214	432
	B							182	N3593	DWIGHT LESLIE JOHNSON	3C	1	1
06977	P	X3	8810	C257	11	15926440504 1944						BY WILL	
	A							143	C108	GILBERT MINTHORN	2	1	20
	B							143	1070	MATILDA MINTHORN	3C	1	1
09678	R	X3	8810	C257	11	47607441208 1944							
	A							143	C356	MITCHELL LLOYD	2	3	20
	B							143	C23	DOROTHY SHEWATASH LLOYD	3W	1	1
	C										9	BY WILL	
03198	P	D	1250	C150-A01		2181--0327 1946						NESENW NNSESENW	
	A									U S	1	1	1
	B							143	914	CARRIE JOHNSON MILLER	3	1	1
	C										9	PARTITION	

THIS SECTION CONTINUED ON NEXT PAGE

SYMBOLS

Land Description

x Full [illegible]

0 Partial [illegible] of Govt Lots numbered 10 and above or multiple Govt lots [illegible]

1-9 Govt Lots

★ Outside Reservation

CODES

Type Document

01 Trust Patent
02 Restricted Fee Patent
03 Deed to Non Trust Status
04 Executive Order
05 Treaty
06 Acts of Congress
07 Secretarial Order
08 Order Transferring Indian lands to
09 Deed to Restricted Status
10 Deed to Trust Status
11 Probate
12 Probate Modification
13 Easement
14 Supplemental Plat
15 [illegible]
16 Free Patent
17 Homestead Patent
18 Certificate of Competency
19 Order Removing Restrictions
20 Allotment [illegible]
21 Declarations of Taking
22 Mortgage Satisfaction
23 Lease
24 Memorandum of Sale of Allotted Land (Deferred Payment Contract)
25 Federal Inventory Order
26 Miscellaneous
27 Title Status Report

Ownership of Tribal or Government [illegible] Land (in column designated Identification No.)

xxx 10 Tribal - Original
xxx 20 " - Reserved
xxx 30 " - Acquisition of Allotted Lands
xxx 40 " - Purchased in Trust with Tribal Funds
xxx 50 " - Trust Land in Trust with [illegible] Funds (I R A)
xxx 52 Other
xxx 55 Owner Land Fee
xxx 60 Government Owned [illegible]
xxx 61 [illegible]
xxx 62 [illegible]

xxx Tribal Code Prefix

1 Grantor Grantee (in column designated)
2 Grantor Heir
3 Grantor Other
4 Grantor Non Indian
5 Grantor Grantee Indian Heir to Deceased Allottee on Fee
6 Grantor Grantee Indian Heir to Deceased Allottee on Trust
7 Grantor Grantee Terminated Indian
9 - Remarks

★ Relationship

F Father
M Mother
W Wife
H Husband
C Child
O Other

LAND INDEX

BUREAU OF INDIAN AFFAIRS

Tract	Twp	Range	Mer	County	State	Code
7	2N	34E	WM	UMATILLA	ORE	143 0 UMATILLA

EXHIBIT 5
Page 18

		NE	NW	SW	SE	Acres	Tract Number	Document Type	Document Number	Date Mo Day Year	Grantor/Decedent Tribe Code	Grantor/Decedent Identification No.	Grantee/Heirs Names	Code	Remarks/Fractional Interest Numerator	Denominator
07731	P		0			2750	C150-B	01	2182--	03271946					WSENW SSESENW SNSESENW	
	O												U S	1	1	1
	A										143	WW160	JIM LUKE	3	1	8
	P										124	785	MARGARET WILLIAMS	3	7	8
	C													9	PARTITION	
	D															
09717	R		1		XO	11830	C233-A	11	279014607101946						ESWSE EWSWSE	
	A										182	32	ANNIE PARNELL LITTLE	2	1	1
	P										182	N3725	LOUISE LITTLE MARTIN	3C	1	1
06998	P		X			4000	C150-A	11	325514709231947							
	A										143	914	CARRIE JOHNSON MILLER	2	1	3
	P										143	915	EDITH WHITEBULL JOSHUA	3C	1	5
	C										143	1278	CHARLES MILLER	3C	1	5
	D										143	1396	ANNIE MILLER	3C	1	5
	E										124	U1736	MORRIS MILLER JR	3C	1	5
	F										124	U1737	JOSEPH MILLER	3C	1	5
	G													9	SJ CURTESY RGT	
09823	V	0	0			7700	C101	11	468948021919 48						PT ENE NOT SOLD	
	A										182	1595	LENA (R) JOHNSON (CRAIG)	2	1	64
	P										182	N3109	DANIEL CRAIG	3C	1	1
09823	X	XX				8000	C100	11	468948021919 48							
	A										182	1595	LENA (R) JOHNSON (CRAIG)	2	1	48
	P										182	N3109	DANIEL CRAIG	3C	1	1
09823	Y				X X	8000	C369	11	468948021919 48							
	A										182	1595	LENA (R) JOHNSON (CRAIG)	2	210	432
	P										182	N3109	DANIEL CRAIG	3C	1	1
09786	X	XX				8000	C100	11	595348030319 48							
	A										143	587	AGNES CRAIG	2	1	8
	B										143	U54	JOHNNIE BARR	30	1	5
	C										143	U55	WENDELL HAYES	30	1	5
	D										143	U157	NADINE HAYES	30	1	5
	E										143	U197	CRAIG HAYES	30	1	5
	F										143	U321	ALLEN TOWNER	30	1	5
	G													9	BY WILL SJ LIFE	
	H													9	EST+ RGTS/SURVIVOR	
09786	Y	0	0			7700	C101	11	595348030319 48						PT ENE	
	A										143	587	AGNES CRAIG	2	19	192
	B										143	U54	JOHNNIE BARR	30	1	5
	C										143	U55	WENDELL HAYES	30	1	5
	D										143	U157	NADINE HAYES	30	1	5

THIS DOCUMENT CONTINUED ON NEXT PAGE

LEGEND

SYMBOLS

Land Description

x Full U.S. Sec.
0 Partial U.S. Sec., or Govt. Lot number-in-fraction above or multiple Govt. lots in U.S. Sec.
1-9 Govt. Lots
* Outside Reservation

CODES

Tract Code

01 Trust Patent
02 Restricted Fee Patent
03 Deed to Non Trust Status
04 Executive Order
05 Treaty
06 Acts of Congress
07 Secretarial Order
08 Order Transferring Inherited Interests
09 Deed to Restricted Status
10 Deed to Trust Status
11 Probate
12 Probate Modification
13 Easement
14 Supplemental Plat
15 Mortgage
16 Fee Patent
17 Homestead Patent
18 Certificate of Competency
19 Order Removing Restrictions
20 Allotment Schedule
21 Declarations of Taking
22 Mortgage Satisfaction
23 Deed
24 Memorandum of Sale of Allotted Land (Deed Payment Contract)
25 Federal Revesting Order
26 Miscellaneous
27 Title Status Report

Ownership of Tribal or Government Land (in column designated Identification No.)

xxx 10 Tribal - Original
xxx 20 " - Reserve
xxx 30 " - Acquisition of Adjacent Lands
xxx 40 " - Purchased in Trust with Tribal Funds
xxx 50 " - Purchased in Trust with Appropriated Funds (BIA)
xxx 52 Other
xxx 55 Game Tribal
xxx 60 Government Owned School
xxx 61 " Sub. Marg.
xxx 62 " - Other

xxx Tribal Code Prefix

1 Grantor/Grantee (in column designated

1 Grantor - Non Indian
2 Grantor - Indian
3 Grantee - Indian
4 Grantee - Non Indian
5 Grantor/Grantee - Indian Owning or Acquiring Interest in Fee
6 Grantor/Grantee - Indian Tribe Owning or Acquiring Interest in Fee
7 Grantor/Grantee - Terminated Indian

9 - Remarks

* Relationship

F - Father
M - Mother
W - Wife
H - Husband
C - Child
O - Other

LAND INDEX

Township	Range	Meridian	County	State	Agency
2N	34E	WM	UMATILLA	ORE	1430 UMATILLA

PAGE NO. 10

EXHIBIT 5
Page 79

		Acres	Tract Number	Document Type	Document Number	Date (Mo Day Year)	Grantor/Decedent Tribe Code	Identification No.	Grantee/Heirs Names	Code	Remarks/Fractional Part Numerator	Denominator
	E						143	U197	CRAIG HAYES	30	1	5
	F						143	U321	ALLEN TOWNER	30	1	5
	G									9	BY WILL	SJ LIFE
	H									9	EST+RGTS/SURVIVOR	
09824	V	77.00	C101	12	468948072019	49					PT ENE NOT SOLD	
	A						182	1595	LENA (R) JOHNSON (CRAIG)	2	1	64
	B						182	N3109	DANIEL CRAIG	30	1	2
	C						143	U311	VERONICA TIAS	30	1	2
	D									9	MOD ORD	2-19-48
	E									9	CORRECTS	HEIRSHIP
09824	X	80.00	C100	12	468948072019	49						
	A						182	1595	LENA (R) JOHNSON (CRAIG)	2	1	48
	B						182	N3109	DANIEL CRAIG	30	1	2
	C						143	U311	VERONICA TIAS	30	1	2
	D									9	MOD ORD	2-19-48
	F									9	CORRECTS	HEIRSHIP
09824	Y	80.00	C369	12	468948072019	49						
	A						182	1595	LENA (R) JOHNSON (CRAIG)	2	210	432
	B						182	N3109	DANIEL CRAIG	30	1	2
	C						143	U311	VERONICA TIAS	30	1	2
	D									9	MOD ORD	2-19-48
	E									9	CORRECTS	HEIRSHIP
09747	P	80.00	C369	11	101875005091	950						
	A						143	UM200	MARY JOHNSON ST DENNIS	2	4	432
	B						101	318	JOE WATERS	30	1	4
	C						101	319	NANCY WATERS BRONCHEAU	30	1	4
	D						143	1094	ELSIE ALLEN MCKAY	30	1	4
	E						143	1096	JOHN FRANCIS SLICKPOO	30	1	4
06938	P	88.10	C257	11	593151040619	51					DOC OMITS LOT 3	
	A						143	C23	DOROTHY SHEWATUS LLOYD	2	3	20
	B						143	525	MOSES LLOYD	30	1	3
	C						143	524	PETER LLOYD	30	1	3
	D						143	891	FRANCIS SHILLAL	30	1	3
	E									9	BY WILL	
09766	X	80.00	C100	11	119215108021	951						
	A						143	U197	CRAIG ALEXANDER HAYES	2	1	40
	B						143	U54	JOHNNIE BARR	30	1	4
	C						143	U55	WENDELL HAYES	30	1	4
	D						143	U157	NADINE HAYES	30	1	4
	F						143	U321	ALLEN TOWNER	30	1	4
										9	SJ LIFE ESTATE	

THIS SECTION CONTINUED ON NEXT PAGE

LAND INDEX

Bureau of Indian Affairs

Tract	Twp	Range	Mer	County	State	Reservation
7	2N	34E	WM	UMATILLA	ORF	143 0 UMATILLA

PAGE 11

EXHIBIT 5
Page 20

		NE¼ N½S½ E½W½	NW¼ N½S½ E½W½	SW¼ N½S½ E½W½	SE¼ N½S½ E½W½	ACRES	TRACT NUMBER	DOCUMENT TYPE	DOCUMENT NUMBER	DATE MO DAY YEAR	GRANTOR/DECEDENT TRIB CODE	GRANTOR/DECEDENT IDENTIFICATION NO	GRANTEE/HEIRS NAMES		REMARKS-FRACTIONAL INTEREST NUMERATOR	DENOMINATOR
09766	Y	0 0				7700	C101	11	119215	08021951					PT ENE	
	A										143	U197	CRAIG ALEXANDER HAYES	2	19	960
	B										143	U54	JOHNNIE BARR	3 0	1	4
	C										143	U55	WENDELL HAYES	3 0	1	4
	D										143	U157	NADINE HAYES	3 0	1	4
	E										143	U321	ALLEN TOWNER	3 0	1	4
	F													9	SJ LIFE ESTATE	
09787	P			X3		8810	C257	12	115052	02061952						
	A										182	825	AGNES WILSON POWERS	2	3	20
	B										182	N3343	LIZZIE POWERS JARETH	3 0	1	1
	C													9	ADDITIONAL LAND	
07270	Y			X3		8810	C257	11	131125	21001 1952						
	A										124	1371	CLOMIAT ONEPENNEE	2	1	25
	B										124	U1425	LOUISE CHARLES	3 0	1	3
	C										124	U452	LOUIE CHARLES	3 0	1	3
	D										124	U457	ROY CHARLES	3 0	1	3
09760	O				X X	8000	C369	11	175725	3101 91953						
	A										143	1096	JOHN SLICKPOO	2	1	432
	B										101	318	JOE WATERS	3 0	1	3
	C										101	319	NANCY WATERS BRONCHEAU	3 0	1	3
	D										143	1094	ELSIE ALLEN MCKAY	3 0	1	3
07081	P	XX				8000	C100	10	4450	--08311954						
	A										143	590	MAUDE CRAIG ANTOINE	2	1	1
	B										143	U54	JOHNNIE BARR	3	1	4
	C										143	U55	WENDELL HAYES	3	1	4
	D										143	U157	NADINE HAYES	3	1	4
	E										143	U321	ALLEN TOWNER	3	1	4
	F													9	LIFE ESTATE ONLY	
07081	O	0 0				7700	C101	10	4450	--08311954					PT ENE	
	A										143	590	MAUDE CRAIG ANTOINE	2	1	1
	B										143	U54	JOHNNIE BARR	3	1	4
	C										143	U55	WENDELL HAYES	3	1	4
	D										143	U157	NADINE HAYES	3	1	4
	E										143	U321	ALLEN TOWNER	3	1	4
	F													9	LIFE ESTATE ONLY	
07598	P	0 0				7700	C101	11	164655	02031955					PT ENE BY WILL	
	A										143	C103	ANNIE HAYES SHIPPENTOWER	2	1	4
	B										143	590	MAUDIE C ANTOINE	3 0	1	1
09376	T	XX					C100	26	5346	--04261955						
	A										143	U54	JOHNNIE BARR	2		

THIS DOCUMENT CONTINUED ON NEXT PAGE

SYMBOLS

Land Description

x full ¼ sec
0 Partial ¼ sec. or Govt Lots (numbers listed above or multiple Govt lots in sec)
1-9 Govt Lots
* Outside Reservation

CODES

Type Document

01 Trust Patent
02 Restricted Fee Patent
03 Deed to Non-Trust Status
04 Executive Order
05 Treaty
06 Acts of Congress
07 Secretarial Order
08 Order Transferring Inherited Interests
09 Deed to Restricted Status
10 Deed to Trust Status
11 Probate
12 Probate Modification
13 Exchange
14 Supplemental Plat
15 Mortgage
16 Fee Patent
17 Homestead Patent
18 Certificate of Competency
19 Order Removing Restrictions
20 Allotment Schedule
21 Declarations of Taking
22 Mortgage Satisfaction
23 Lease
24 Memorandum of Sale of Allotted Land (Time Payment Contract)
25 Federal Housing Order
26 Miscellaneous
27 Title Status Report

Ownership of Tribal or Government land (in column designated Identification No.)

xxx 10 Tribal - Original
xxx 20 " - Reserve
xxx 30 " - Acquisition of Allotted Lands
xxx 40 " - Purchased in Trust with Tribal Funds
xxx 50 " - Purchased in Trust with Appropriated Funds (BIA)
xxx 52 Other
xxx 55 - Owned in Fee
xxx 60 Government Owned School
xxx 61 " " Safe Margin
xxx 62 " " Other

xxx Tribal Code Prefix

1 ~~Grantor/Grantee~~ (in column designated

1 Grantor - Non Indian
2 Grantor - Indian
3 Grantee - Indian
4 Grantee - Non Indian
5 Grantor/Grantee - Indian Owning of Any Interest in Fee
6 Grantor/Grantee - Indian Tribe Owning or Acquiring Interest in Fee
7 Grantor/Grantee - Terminated Indian

9 Remarks

* Relationship

F - Father
M - Mother
W - Wife
H - Husband
C - Child
O - Other

LAND INDEX

EXHIBIT 5
Page 21

Twp	Rge	Meridian	County	State	Reservation
7	2N	34E	WM UMATILLA	ORE	143 0 UMATILLA

PAGE NO 12

		NE NW SW SE	Acres	Tract Number	Document Type	Document Number	Date Mo Day Year	Res Code	Identification No	Grantor/Decedent Grantee/Heirs Names	Code	Remarks/Fractional Interest Numerator	Denominator	Legend
	B							143	U55	WENDELL HAYES	3	1	3	SYMBOLS
	C							143	U157	NADINE HAYES	3	1	3	Land Description
	D							143	U321	ALLEN TOWNER	3	1	3	x full Section
	E										9	DEATH CERTIFICATE		0 Partial Issue of Gov Lots numbered 10 and above or multiple Govt lots
	F										9	TERMINATES INT		1-9 Govt Lots
														* Outside location
09376	U	0 0		C101	26	5346--04261955						PT ENE M/B		CODES
	A							143	U54	JOHNNIE BARR	2			Type Document
	B							143	U55	WENDELL HAYES	3	1	3	01 Trust Paid
	C							143	U157	NADINE HAYES	3	1	3	02 Restricted Fee Patent
	D							143	U321	ALLEN TOWNER	3	1	3	03 Deed to Non-Trust Status
	E										9	DEATH CERTIFICATE		04 Executive Order
	F										9	TERMINATES INT		05 Treaty
														06 Acts of Congress
09905	AP		X X	8000	C369	11	56356801091956							07 Secretarial Order
	A							101	319	NANCY WATERS BRONCHEAU	2	1	324	08 Order Transferring Interests
	B							101	N4566	ROSALIA L THOMAS	3C	1	4	09 Deed to Restricted Status
	C							101	N4567	CECELIA BRONCHEAU MYRICK	3C	1	4	10 Deed to Trust Status
	D							101	N4569	ANNABELL BRONCHEAU VEAL	3C	1	4	11 Patent
	E							101	N4568	ALVINA BRONCHEAU CAWSTON	3C	1	4	12 Patent Modification
														13 Patent
														14 Supplemental Plat
														15 Mineral
														16 Fee Patent
														17 Homestead Patent
														18 Certificate of Competency
														19 Order Removing Restrictions
														20 Abstract Selected
														21 Declaration of Taking
														22 Mortgage Satisfaction
07615	X	X	4000	C131	11	13751570920 1957								23 Lease
	A							143	521	WILLIAM BADROADS	2	1	3	24 Memorandum of Sale of Allotted Land Tribal Payment Contract
	B							143	U568	THOMAS EDWARD BADROADS	3C	1	1	25 Federal Vesting Order
	C										9	SJ DOWER RIGHT		26 Miscellaneous
														27 Title Status Report
07615	Y	X3	8810	C257	11	13751570920 1957								
	A							143	521	WILLIAM BADROADS	2	1	60	Ownership of Tribal or Government land (in some designated Allotment No
	B							143	U568	THOMAS EDWARD BADROADS	3C	1	1	xxx 10 Tribal Original
	C										9	SJ DOWER RIGHT		xxx 20 " - Reserve
														xxx 30 " - Acquisition of Allotted Lands
09742	W	3 X	8810	C257	11	88235806201958								xxx 40 " - Purchased in Trust with Tribal Funds
	A							143	891	FRANCIS SHILLAL	2	1	20	xxx 50 " - Purchased in Trust with Appropriated Funds (BIA)
	B							143	U217	LAVERNE J SHILLAL	3C	1	9	xxx 52 Other
	C							143	U279	VIRGINIA LEE SHILLAL	3C	1	9	xxx 55 " - Owned in Fee
	D							143	U301	THOMAS SHILLAL	3C	1	9	xxx 60 Government Owned School
	F							143	U339	JUDITH MARIE SHILLAL	3C	1	9	xxx 61 " " Sub Marginal
	F							143	U393	SYLVIA ANN SHILLAL	3C	1	9	xxx 62 " " Other
	G							143	U428	STELLA LOUISE SHILLAL	3C	1	9	xx Tribal Code Prefix
	H							143	U441	GLORIA SHILLAL	3C	1	9	
	I							143	U527	HELEN SHILLAL	3C	1	9	1 Grantor Codes (in section designated
	J							143	U526	EDITH SHILLAL	3C	1	9	1 Grantor Identment
	K										9	SJ DOWER RGT		2 Grantor Sale
														3 Grantor Other
														4 Grantor Not Listed
														5 Grantee Codes
														6 Grantee Codes
09802	P	X3	8810	C257	11	13495901281959								7 Grantee Codes
	A							182	N3343	LIZZIE POWERS JARETH	2	3	20	8 Grantee Codes
	B							182	N3916	ANNA(ANNIE) M J ALLEN	3C	1	6	9 Grantee Codes
	C							182	N3917	JOSEPHINE JARETH	3C	1	6	Gender
														F Female
														M Male
														U Unknown
														Other
														Other

THIS DOCUMENT CONTINUED ON NEXT PAGE

LAND INDEX

BUREAU OF INDIAN AFFAIRS

7 | 2N | 34E | WM | UMATILLA | ORE | 143 | 0 | UMATILLA

		NE¼ N½S½ E½W½	NW¼ N½S½ E½W½	SW¼ N½S½ E½W½	SE¼ N½S½ E½W½	ACRES	TRACT NUMBER	DOCUMENT DIST	DOCUMENT NUMBER	DATE MO DAY YEAR	GRANTOR/DECEDENT IRS CODE	GRANTOR/DECEDENT IDENTIFICATION NO	GRANTOR/DECEDENT NAMES	GRANTEE/HEIRS CODE	REMARKS/FRACTIONAL INTEREST NUMERATOR	DENOMINATOR
	D										182	N3918	SAMUEL FRANK JABETH	3C	1	6
	E										182	N3919	SUSIE JABETH	3C	1	6
	F										182	N3920	SARAH AGNES JABETH	3C	1	6
	G										182	N3921	JONATHAN (JOHNNIE) JABETH	3C	1	6
	H													9	SJ CURTESY RIGHT	
09830	P	XX				8000	C100	11	597600114196 0							
	A										143	1120	ISABEL CRAIG FRENCH	2	3	16
	R										124	U852	JOAN FRENCH	3C	1	6
	C										143	1274	LYDIA FRENCH JOHNSON	3C	1	6
	D										143	1323	AMANDA FRENCH WATLAMET	3C	1	6
	E										143	U27	IONE FRENCH WATLAMET	3C	1	6
	F										124	U853	RUTH FRENCH BUTLER	3C	1	6
	G										124	U858	ROSEMARY FRENCH (PIMMS)	3C	1	6
	H													9	BY WILL SJ CONDS	
	I													9	AND LIFE USE OF	
	J													9	BERT FRENCH	
09830	O	0	0			7700	C101	11	597600114196 0						PT ENE NOT SOLD	
	A										143	1120	ISABEL CRAIG FRENCH	2	9	64
	R										124	U852	JOAN FRENCH	3C	1	6
	C										143	1274	LYDIA FRENCH JOHNSON	3C	1	6
	D										143	1323	AMANDA FRENCH WATLAMET	3C	1	6
	E										143	U27	IONE FRENCH WATLAMET	3C	1	6
	F										124	U853	RUTH FRENCH BUTLER	3C	1	6
	G										124	U858	ROSEMARY FRENCH (PIMMS)	3C	1	6
	H													9	BY WILL SJ CONDS	
	I													9	AND LIFE USE OF	
	J													9	BERT FRENCH	
09856	T	XX				8000	C100	11	E 165621005196 2							
	A										182	N3109	DANIEL CRAIG	2	1	32
	R										143	U176	DELORES CRAIG QUAEMPTS	3C	1	10
	C										143	U740	LAVENIA(V)CRAIG BILLY	3C	1	10
	D										182	N3113	DANIEL CRAIG JR	3C	1	10
	E										182	N3114	MARIETTA CRAIG	3C	1	10
	F										182	N3115	FERMORE CRAIG	3C	1	10
	G										182	N3116	STEVEN L CRAIG	3C	1	10
	H										143	U387	RICHARD CRAIG	3C	1	10
	I										143	U416	VERLETTA JUNE CRAIG	3C	1	10
	J										143	U495	CHARLES GEORGE CRAIG	3C	1	10
	K										143	U496	MELVA LOUISE CRAIG	3C	1	10
09856	U	0	0			7700	C101	11	E 165621005196 2						PT ENE NOT SOLD	
	A										182	N3109	DANIEL CRAIG	2	3	128
	R										143	U176	DELORES CRAIG QUAEMPTS	3C	1	10
	C										143	U740	LAVENIA(V)CRAIG BILLY	3C	1	10
	D										182	N3113	DANIEL CRAIG JR	3C	1	10

THIS DOCUMENT CONTINUED ON NEXT PAGE

LEGEND

SYMBOLS

Land Description

x full ¼ sec

0 Partial ¼ sec or Govt Lots number 10 and above or multiple govt lots in ¼ sec

1-9 Govt Lots

* Outside Reservation

CODES

Type Document

01 Trust Patent
02 Restricted Fee Patent
03 Deed to Non Trust Status
04 Executive Order
05 Treaty
06 Acts of Congress
07 Secretarial Order
08 Order Transferring Inherited Interests
09 Deed to Restricted Status
10 Deed to Trust Status
11 Probate
12 Probate Modification
13 Easement
14 Supplemental Plat
15 Mortgage
16 Fee Patent
17 Homestead Patent
18 Certificate of Competency
19 Order Removing Restrictions
20 Allotment Schedule
21 Determinations of Taking
22 Mortgage Satisfaction
23 [illegible]
24 Memorandum of Sale of Allotted Land for Payment Contract
25 Federal Foreclosing Order
26 Miscellaneous
27 Title Status Report

Ownership of Tribal or Government Land (in column designate 1 [illegible] Non No.)

xxx 10 Tribal Original
xxx 20 Reserved
xxx 30 Acquisition of Additional Lands
xxx 40 " Purchased in Trust with Tribal Funds
xxx 50 " Purchased in Trust with Appropriated Funds
xxx 52 [illegible]
xxx 55 [illegible]
xxx 60 Government Owned [illegible]
xxx 61 " [illegible]
xxx 62 " [illegible]

xxx Tribal Code Prefix

1 Grantor-Grantee per Column designated
2 Grantor-Indian
3 Grantor-Non Indian
4 Grantor-Tribal
5 Grantor-Grantee - Indian Owning or Acquiring Interest in [illegible]
6 Grantor-Grantee - Indian Tribe [illegible]
7 Grantor-Grantee - Tribal or Tribal
8 Remarks

Relationship

F - Father
M - Mother
W - Wife
H - Husband
C - Child
O - Other

EXHIBIT 5
Page 22

LAND INDEX

BUREAU OF INDIAN AFFAIRS

7 2N 34E WM UMATILLA ORE 143 0 UMATILLA

EXHIBIT 5
Page 23

		NW NS EW	NW NS EW	SE NS EW	ACRES	TRACT NUMBER	DOCUMENT	DATE	LAND CODE	INDEX NO.	GRANTOR/DECEDENT GRANTEE/HEIRS NAMES		REMARKS FRACTIONAL INTEREST NUMERATOR	DENOMINATOR
	E								182	N3114	MARIETTA CRAIG	3	1	10
	F								182	N3115	FERMORE CRAIG	3	1	10
	G								182	N3116	STEVEN L CRAIG	3	1	10
	H								143	U387	RICHARD CRAIG	3	1	10
	I								143	U416	VERLETTA JUNE CRAIG	3	1	10
	J								143	U495	CHARLES GEORGE CRAIG	3	1	10
	K								143	U496	MELVA LOUISE CRAIG	3	1	10
09856	X			X	X	8000	C369	11 E 165621	0051962					
	A								182	N3109	DANIEL CRAIG	2	35	144
	B								143	U176	DELORES CRAIG QUAEMPTS	3	1	10
	C								143	U740	LAVENIA(V)CRAIG BILLY	3	1	10
	D								182	N3113	DANIEL CRAIG JR	3	1	10
	E								182	N3114	MARIETTA CRAIG	3	1	10
	F								182	N3115	FERMORE CRAIG	3	1	10
	G								182	N3116	STEVEN L CRAIG	3	1	10
	H								143	U387	RICHARD CRAIG	3	1	10
	I								143	U416	VERLETTA JUNE CRAIG	3	1	10
	J								143	U495	CHARLES GEORGE CRAIG	3	1	10
	K								143	U496	MELVA LOUISE CRAIG	3	1	10
09772	S		X3			8810	C257	11 E 66630	5201963					
	A								143	823	LOUISE MARTIN ELK	2	3	20
	B								143	U65	BRYSON G LIBERTY	3	1	3
	C								143	U295	SHARON ELK	3	1	3
	D								143	U372	KAREN ELK	3	1	3
	E											9	SJ CURTESY RIGHT	
07640	U	X				4000	C131	11 E 14263	09131963					
	A								143	523	ROSIE (ROSE) BADROADS	2	1	3
	B								143	U163	CATHERINE M SHEOSHIPS	3	1	1
	C											9	BY WILL	
07640	V		X3			8810	C257	11 E 14263	09131963					
	A								143	523	ROSIE (ROSE) BADROADS	2	1	60
	B								143	U163	CATHERINE M SHEOSHIPS	3	1	1
	C											9	BY WILL	
08874	P				X	X	8000	C369	11 D 36640	3121964				
	A								182	N3593	LESLIE DWIGHT JOHNSON	2	214	432
	B								143	U500	VICTORIA A JOHNSON	3	1	4
	C								143	U501	WILLIAM D JOHNSON	3	1	4
	D								143	U702	JAMES L JOHNSON	3	1	4
	E								143	U703	FRANK L JOHNSON	3	1	4
	F											9	SJ DOWER RIGHT OF	
	G											9	MARY T JOHNSON	
09016	P		X3			8810	C257	11 E 13660	1251966					

THIS DOCUMENT CONTINUED ON NEXT PAGE

N N S S
E W W E

LEGEND

SYMBOLS

Land Description

A - Full Tract
B - Partial Tract - List Government Lot Numbers
10 and above or multiple lots in
1-9 Government Lots
* Outside Reservation

CODES

Type Document

01 Trust Patent
02 Restricted Fee Patent
03 Deed to Trust Status
04 Executive Order
05 Treaty
06 Acts of Congress
07 Secretarial Order
08 Order Transferring Inherited Interests
09 Deed to Restricted Status
10 Deed to Trust Status
11 Probate
12 Probate Modification
13 Leased
14 Supplemental Plat
15 Mineral
16 Fee Patent
17 Homestead Patent
18 Certificate of Competency
19 Order Removing Restrictions
20 Abstract
21 Declarations of Taking
22 Mortgage Satisfaction
23 Lease
24 Memorandum of Sale of Allotted Land Deed Payment Contract
25 Federal Ownership Order
26 Miscellaneous
27 Title Status Report

Ownership of Tribal or Government Land (in column designated Transaction No.)

xxx 10 Tribal - Original
xxx 20 " Reserve
xxx 30 " - Acquisition of Allotted Lands
xxx 40 " - Purchased in Trust with Tribal Funds
xxx 50 " Purchased in Trust with appropriated Funds (Public Law)
xxx 52 Other
xxx 55 Donation
xxx 60 Government Owned Tribal
xxx 61 Tribal Margin
xxx 62 Other

xxx Tribal Code Prefix

T Grantor Grantee (in column designated)
1 Grantor Non Indian
2 Grantor Indian
3 Grantee Indian
4 Grantee Non Indian
5 Grantor/Grantee Indian Owning or Acquiring Interest in Fee
6 Grantor Grantee Indian Tribe Owning - Acquiring Interest in Fee
7 Grantor/Grantee Tribe and Indian
9 Remarks

* Relationship

F - Father
M - Mother
W - Wife
H - Husband
C - Child
O - Other

LAND INDEX

BUREAU OF INDIAN AFFAIRS

Twp	Rge	Meridian	Co	County	State	Agency
7	2N	34E	W	UMATILLA	ORE	143 0 UMATILLA

		NE NW SW SE	Acres	Tract Number	Type	Document Number	Date	Grantor/Decedent Identification No	Grantee/Heirs Names	Remarks	Fractional Interest Numerator	Denominator
	A							143 1070	MATILDA M WANNASSAY		1	20
	R							143 U671	VINCENT A WANNASSAY		1	1
09101	S	D	2750	C150-B	11	E 29670	3141967			WSENW SSESENW SNSESENW		
	T							143 WW160	JIM LUKE		1	8
	A							143 915	EDITH WHITEBULL JASHWAY		1	3
	R							143 1278	CHARLEY MILLER		1	3
	C							124 U1736	MORRIS MILLER JR		1	3
	D											
09118	O	X3	8810	C257	11	E 64670	5311967					
	A							124 4555	TAMY (SUSIE) ONEPENEE		1	25
	R							124 2978	LENA (LATLATCH) ONEPENEE		3	12
	C							124 3982	TILDA ONEPENEE TOTUS		3	12
	D							124 4193	GILBERT ONEPENEE		3	12
	E							124 U1425	LOUISE CHARLES KAHCLAMAT		1	12
	F							124 U452	LOUIE CHARLES		1	12
	G							124 U457	ROY (TOPSNUTE) CHARLES		1	12
09384	T	X X XXXX			13	5342--0	7191967					
	A								BIA			
	R								UMATILLA COUNTY OREGON			
	C									ROAD R/W NO S-17		
09295	O	D	2750	C150-B	11	E 10268	0828 1968			WSENW SSESENW SNSESENW		
	R											
	A							124 785	MARGARET WILLIAMS		7	8
	R							124 2324	HOPTONIX SAWYAHLIL		1	1
09293	P	X X	8000	C369	11	E 11868	0926 1968					
	A							101 N4569	LUCILLE A R VEAL		1	1296
	R							101 N4657	PATRICIA ANN VEAL		1	6
	C							101 N4658	DEBORAH ANN ANDREWS		1	6
	D							101 N4659	DAVID LYLE ANDREWS		1	6
	E							101 N4660	JOHN HAROLD ANDREWS		1	6
	F							101 N4661	THOMAS DARYL ANDREWS		1	6
	G							101 N4662	DANIEL LEE ANDREWS		1	6
	H									SJ CURTESY RGT		
09429	S	X X	8000	C369	11	E 89690	7071969					
	A							101 318	TOM WATERS JR		1	324
	R							101 N4737	ARLENE M WATERS JOHNSON		1	7
	C							101 N4738	THOMAS WATERS		1	7
	D							101 N4739	JOSEPH WATERS JR		1	7
	E							101 N4740	NORMA J WATERS ROBINETTE		1	7
	F							101 N4741	GARRY STEVE WATERS		1	7
	G							101 N4742	ELIZABETH KARRIE WATERS		1	7
	H							101 N4743	LINDA NANCY WATERS		1	7

THIS DOCUMENT CONTINUED ON NEXT PAGE

LEGEND

SYMBOLS

Land Description

A - Full Sec
0 - Partial - Aliquot or Govt Lots numbered 10 and above or multiple Govt lots in sec
1-9 Govt Lots
* Outside Reservation

CODES

Type Instrument

01 Trust Patent
02 Restricted Fee Patent
03 Deed to Trust Trust Status
04 Executive Order
05 Treaty
06 Acts of Congress
07 Secretarial Order
08 Order Transferring Inherited Interest
09 Deed to Restricted Status
10 Deed to Trust Status
11 Probate
12 Probate Modification
13 Easement
14 Supplemental Patent
15 Mortgage
16 Fee Patent
17 Homestead Patent
18 Certificate of Competency
19 Order Removing Restrictions
20 Amendment Other
21 Declarations of Taking
22 Mortgage Satisfaction
23 Lease
24 Memorandum of Sale of Allotted Land Terms Payment Other
25 Federal Register Order
26 Miscellaneous
27 Title Status Report

Ownership of Tribal or Allotted Land (in column designated Tribal or Allotment No.)

xxx 10 Tribal Original
xxx 20 " - Reserve
xxx 30 " - Acquisition of Allotted Lands
xxx 40 " - Purchased in Trust with Tribal Funds
xxx 50 " - Purchased in Trust with Appropriated Funds (BIA)
xxx 52 Other
xxx 55 Owned in Fee
xxx 60 Government Owned School
xxx 61 " Soil Margins
xxx 62 " Other

xxx Tribal Code Prefix

Grantor/Grantee (in column designated "G")

1 Grantor - Non Indian
2 Grantor - Indian
3 Grantee - Indian
4 Grantee - Non Indian
5 Grantor/Grantee - Indian Owning of Acquired Interest in Fee
6 Grantor/Grantee - Indian Tribe Owning of Acquired Interest in Fee
7 Grantor/Grantee - Terminated Indian
9 - Remarks

* Relationship

F - Father
M - Mother
W - Wife
H - Husband
C - Child
O - Other

EXHIBIT 5
Page 24

LAND INDEX

BUREAU OF INDIAN AFFAIRS

PAGE NO. 16

EXHIBIT 5
Page 25

7 2N 34E WM UMATILLA ORE 143 0 UMATILLA

	I																9	SJ DOWER RIGHT			
09970	V		X					4000	C131	11	E 537007201970										
	A											143	U163	CATHERINE S RANDALL			2		1		3
	R											143	1081	JOSEPH SHEOSHIPS			3F		1		1
	C																9	BY WILL			
09970	W			X3				8810	C257	11	E 537007201970										
	A											143	U163	CATHERINE S RANDALL			2		1		60
	R											143	1081	JOSEPH SHEOSHIPS			3F		1		1
	C																9	BY WILL			
10289	P	XX						8000	C100	27	03221972										
	A																				
	R																9	TITLE STATUS RPT			
10289	Q	0	0					7700	C101	27	03221972							PT ENE			
	A																				
	E																9	TITLE STATUS RPT			
10304	P	X	X					8000	C101	12	341253103241972										
	A											143	589	JOHN CRAIG			2		17		192
	R											143	587	AGNES CRAIG			3M		1		1
	C																9	ADM CORR PC129-72			
	O																9	MOD ORD 8-20-31			
	E																9	CORRECTS DESCRIP			
10357	Q		X					4000	C131	27	08171972										
	A																				
	R																9	TITLE STATUS RPT			
10353	Q		X					4000	C131	27	08221972										
	A																				
	R																9	TITLE STATUS RPT			
10442	Q					X	X	8000	C369	11	P0102K7202131973										
	A											143	913	ELIZABETH W B TAPPO			2		12		1296
	R											143	U558	ANTOINE TAPPO			3C		1		1
10447	Q			X3				8810	C257	11	P0010L7302201973										
	A											143	U12	THERESA B SHOEMAKER			2		1		20
	R											143	U795	TINA KAY MONTOYA			3C		1		1
	C																9	SJ LIFE ESTATE			
10450	Q			X3				8810	C257	12	P0010L7303091973										
	A											143	U12	THERESA B SHOEMAKER			2		1		20
	R											143	U795	TINA KAY MONTOYA			3C		1		1
	C																9	MOD ORD 2-20-73-			

THIS DOCUMENT CONTINUED ON NEXT PAGE

N.N.S.S. E.W.W.E

Remarks

01 Trust Patent
02 Restricted Fee Patent
03 Deed to Restricted Status
04 Executive Order
05 Treaty
06 Act of Congress
07 Secretarial Order
08 Order Transferring Individual Indian Interests
09 Deed to Restricted Status
10 Deed to Trust Status
11 Fee Patent
12 Probate Modification
13 Easement
14 Supplemental Plat
15 Non Patent
16 Fee Patent
17 Homestead Patent
18 Certificate of Competency
19 Order Removing Restrictions
20 Allotment Schedule
21 Declarations of Taking
22 Mortgage Satisfaction
23 Deed
24 Memorandum of Sale of Allotted Land (Deed Payment Contract)
25 Federal Recording Order
26 Miscellaneous
27 Title Status Report

Ownership of Tribal or Government Owned Land (in column designated "Identification No.")

xxx 10 Tribal - Original
xxx 20 " - Reserve
xxx 30 " - Acquisition of Allotted Lands
xxx 40 " - Purchased in Trust with Tribal Funds
xxx 50 " - Purchased in Trust with Appropriated Funds (Sec 5)
xxx 52 Other
xxx 55 Claim in Fee
xxx 60 Government Owned School
xxx 61 Sub Marginal
xxx 62 Other

xxx Tribal Code Prefix

1 ~~Grantor/Grantee~~ (in column designated "C")
1 Grantor - Non-Indian
2 Grantor - Indian
3 Grantee - Indian
4 Grantee - Non-Indian
5 Grantor/Grantee - Indian Owning or Acquiring Interest in Fee
6 Grantor/Grantee - Indian Tribe Owning or Acquiring Interest in Fee
7 Grantor/Grantee - Terminated Indian
9 Remarks

★ Relationship

F - Father
M - Mother
W - Wife
H - Husband
C - Child
O - Other

LAND INDEX

BUREAU OF INDIAN AFFAIRS

Tract	Twp	Range	Mer	County	State	Page No
7	2N	34E	WM	UMATILLA	ORE	143 0 UMATILLA 17

		NE¼ N N S S E W E	NW¼ N N S S E W E	SW¼ N N S S E W E	SE¼ N N S S E W E	ACRES	TRACT NUMBER	DOCUMENT TYPE	DOCUMENT NUMBER	DOCUMENT DATE MO DAY YEAR	GRANTOR/DECEDENT IRS CODE	GRANTOR/DECEDENT IDENTIFICATION NO	GRANTEE/HEIRS NAMES	REMARKS	NUMERATOR	DENOMINATOR
	D												9	CORRECTS LIFE ES		
	E												9	TO CURTESY RIGHT		
10497	W			X3		8810	C257	11	P0114L7	411081973				SJ DOWER RGT		
	A										143	U217	LAVERNE JAMES SHILLAL	2	1	18
	B										143	522	ELIZABETH B SHILLAL	3M	1	
10659	P		X			4000	C131	27		08061975						
	A															
	B												9	TITLE STATUS RP1		
10750	S			X3		8810	C257	11	P0061L7	601151976						
	A										143	578	WINNIE KANINE BURKE	2	9	6
	B										143	594	RICHARD BURKE	3H	1	
	C										143	U20	LOUIS G CRANE	3C	1	
10805	P			X3		8810	C257	11	P0069L7	604211976						
	A										182	N3917	JOSEPHINE J LAWRENCE	2	900	3600
	B										182	N4026	VICTOR PARSONS JR	3C	1	
	C										182	N4027	VICKIE JO PARSONS	3C	1	
	D										182	N4410	ELMER ALEXIS RICKMAN	3C	1	
	E										182	N4403	GREGORY A LAWRENCE	3C	1	
10879	P			X3		8810	C257	11	P0037L7	609091976						
	A										182	N3414	ESTELLA R F MCCONVILLE	2	1	6
	B										182	N4292	SYRVENEAS MCCONVILLE	3C	1	
	C										182	N4311	KATHERINE M SHIPPENTOWER	3C	1	
	D										182	N4398	GREGORY LEE CROW	3C	1	
	E										182	N4400	ELIZABETH L CROW	3C	1	
	F										182	N4399	JEFFREY F CROW	3C	1	
10890	P			X3		8810	C257	12	305063	109151976						
	A										143	1069	ANTHONY BLACKHAWK	2	1	2
	B										143	U12	THERESA BLACKHAWK	3C	1	2
	C												9	MOD ORD 6-5-31		
	D												9	CORR FRAC INT		
10895	P			X3		8810	C257	12	310643	209151976						
	A										143	C254	ANN YOUNG CHIEF	2	3	1
	B										143	578	WINNIE K CRANE	3D	1	
	C										143	823	LOUISE MARTIN LIBERTY	3D	1	
	D												9	MOD ORD 1-10-33		
	E												9	CORRECTS FRAC IN		
	F												9	CORRECTS DESCR		
10896	P			X3		8810	C257	12	593151	09151976						
	A										143	C23	TATAMY OR DOROTHY LLOYD	2	3	2
	B										143	525	MOSES LLOYD	3C	1	

THIS DOCUMENT CONTINUED ON NEXT PAGE

N N S S E W E | N N S S E W E | N N S S E W E | N N S S E W E

LEGEND

~~SYMBOLS~~

Land Description

x full ¼ sec
0 Partial ¼ sec. or Govt Lots numbers 10 and above or multiple Govt lots in ¼ sec
1-9 Govt Lots
* Outside Reservation

CODES

Type Document

01 Trust Patent
02 Restricted Fee Patent
03 Deed to Non Trust Status
04 Executive Order
05 Treaty
06 Acts of Congress
07 Secretarial Order
08 Order Transferring Inherited Interests
09 Deed to Restricted Status
10 Deed to Trust Status
11 Probate
12 Probate Modification
13 Easement
14 Supplemental Plat
15 Mortgage
16 Fee Patent
17 Homestead Patent
18 Certificate of Competency
19 Order Removing Restrictions
20 Allotment Schedule
21 Declaration of Taking
22 Mortgage Satisfaction
23 Lease
24 Memorandum of Sale of Allotted Land (Land Payment Contract)
25 Federal Revesting Order
26 Mineral Patents
27 Title Status Report

Ownership of Tribal or Government land (in column designated Identification No.)

xxx 10 Tribal - Original
xxx 20 " - Received
xxx 30 " - Acquisition of Allotted Lands
xxx 40 " - Purchased in Trust with Tribal Funds
xxx 50 " - Purchased in Trust with Appropriated Funds (IRA)
xxx 52 Other
xxx 55 - Owned in Fee
xxx 60 Government Owned - School
xxx 61 " Sub Marginal
xxx 62 " Other

xxx Tribal Code Prefix

1 ~~Grantor/Grantee~~ (in Column designated

1 Grantor Non Indian
2 Grantor Indian
3 Grantee Indian
4 Grantee Non Indian
5 Grantor/Grantee Indian Owning an Interest in Fee
6 Grantor/Grantee - Indian Tribe Owning (going to be held in Fee)
7 Grantor/Grantee - Terminated Indian

9 - Remarks

Relationship

F - Father
M - Mother
W - Wife
H - Husband
C - Child
O - Other

EXHIBIT 5
Page 26

LAND INDEX

Township	Range	Meridian	County	State	Section
7 2N	34E	WM	UMATILLA	ORF	143 0

UMATILLA

EXHIBIT 5
Page 27

		NE¼ N½S½	NW¼ N½S½	SW¼ N½S½	SE¼ N½S½	ACRES	TRACT NUMBER	DOCUMENT DIST	DOCUMENT NUMBER	DOCUMENT DATE MO DAY YEAR	GRANTOR/DECEDENT IRS CODE	GRANTOR/DECEDENT IDENTIFICATION NO	GRANTEE/HEIRS NAMES		NUMERATOR	DENOMINATOR
	C O F F										143	524	PETER LLOYD	3C	1	3
											143	891	FRANCIS SHILLAL	3D	1	3
														9	MOD ORD 4-6-51	
														9	CORRECTS DESCR	
10884	P A R			X3		8810	C257	27		09171976						
														9	TITLE STATUS RPT	
11053	P A B			X3		8810	C257	27		06271977						
														9	TITLE STATUS RPT	
11092	P A R C			X3		8810	C257	10	5793	--10171977						
											182	N3630	RACHEL FRANK JOHNSON	2	1	60
											143	U295	SHARON ELK WEATHERS	3	1	1
														9	SJ 100-FT RR R/W	
11246	U A R			X3		8810	C257	11	P0046L7	806301978						
											143	524	PETER MATHEW LLOYD	2	1	20
											124	3896	LOUISE LLOYD	3W	1	1
11294	P A F	XX				8000	C100	27		09261978						
														9	TITLE STATUS RPT	
11291	P A R	0	0			7700	C101	27		09271978					PT ENE	
														9	TITLE STATUS RPT	
11299	P A R				X	X	8000	C369	27		09291978					
														9	TITLE STATUS RPT	
11386	P A B C D			X3		8810	C257	10	5871	--03191979						
											143	594	RICHARD T BURKE	2	3	40
											143	U20	LOUIS G CRANE	3	1	1
														9	SJ RAILROAD R/W	
														9	*L LIFE EST RES	
11415	P A R C D			X3		8810	C257	10	5876	--05101979						
											143	U393	SYLVIA S ALLEN	2	1	180
											143	U339	JUDITH SHILLAL SCOTT	3	1	1
														9	SJ DOWER RIGHT	
														9	SJ 100-FT RR R/W	

POSTED AS OF 07/15/1979

NRSS E.W.W.E | NRSS E.W.W.E | NRSS E.W.W.E | NRSS E.W.W.E

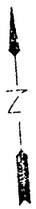

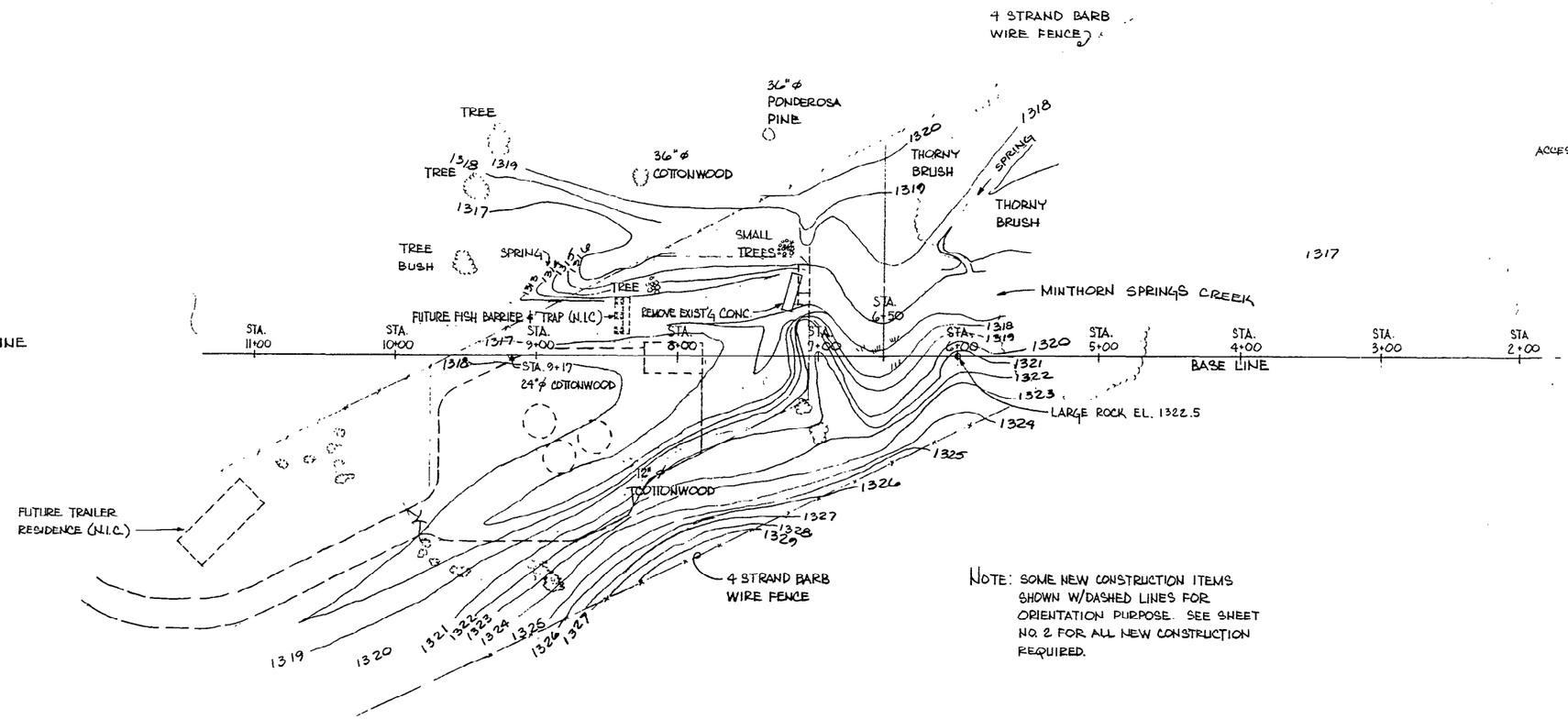

NOTE: SOME NEW CONSTRUCTION ITEMS SHOWN W/DASHED LINES FOR ORIENTATION PURPOSE. SEE SHEET NO. 2 FOR ALL NEW CONSTRUCTION REQUIRED.

SITE TOPOGRAPHY
SCALE 1" = 50'

SURVEY MARCH 19, 1979

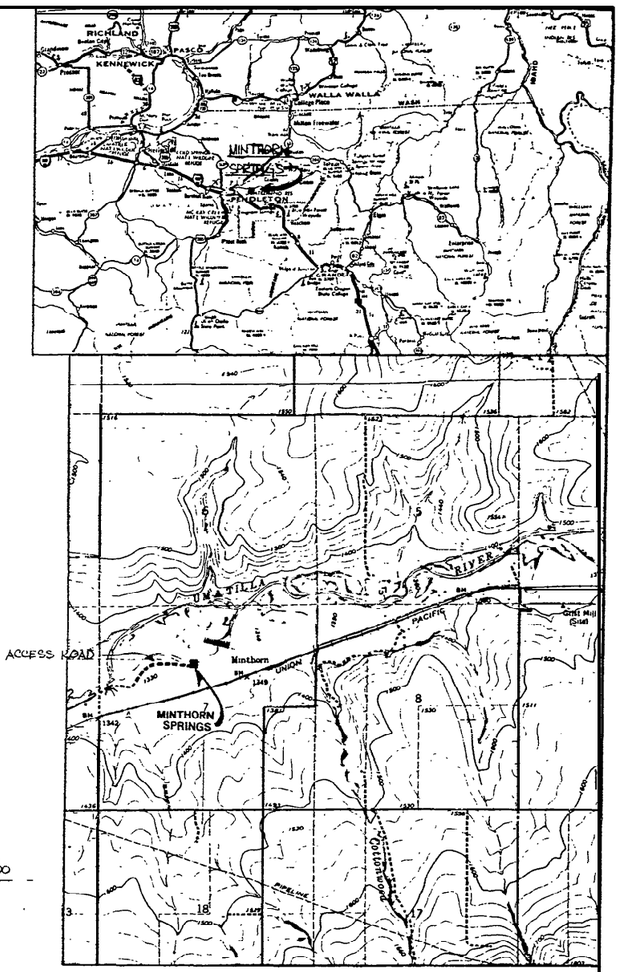

LEGEND

- EXISTING ROAD - GRAVEL
- EXISTING ROAD - 1025 FT., RESHAPE & RE-SURFACE REQ'D.
- NEW ROAD - 1650 FT., NEW BASE & SURFACING REQ'D. ON EXISTING GRADE.
- NEW FLOOD CONTROL DIKE - 500 FT., AVERAGE HEIGHT 3 FT.
- REMOVE EXISTING TIMBER BRIDGE INSTALL 7' x 4 1/2' x 8 GA. PIPE ARCH W/2 END SECTIONS AND FILL TO ADJACENT ROAD PROFILE AND CROSS-SECTION. TOTAL LENGTH OF PIPE ARCH END SECTION ASSEMBLY TO BE 53' MIN.

EXHIBIT 6A

THIS DRAWING IS AN APPROXIMATELY 1/2 SIZE REDUCTION OF THE WORKING DRAWING AND INDICATED SCALES MUST BE ADJUSTED ACCORDINGLY. SEE SPECS FOR AVAILABILITY OR FULL SIZE PRINTS.

REVISION	DATE	DESCRIPTION	BY

UMATILLA INDIAN RESERVATION

MINTHORN SPRINGS HATCHERY — **SITE MAPS**

DESIGNED	DRAWN	DATE	DWG NO
JLC	DWH	6/1980	IF-MISC-249-1.0

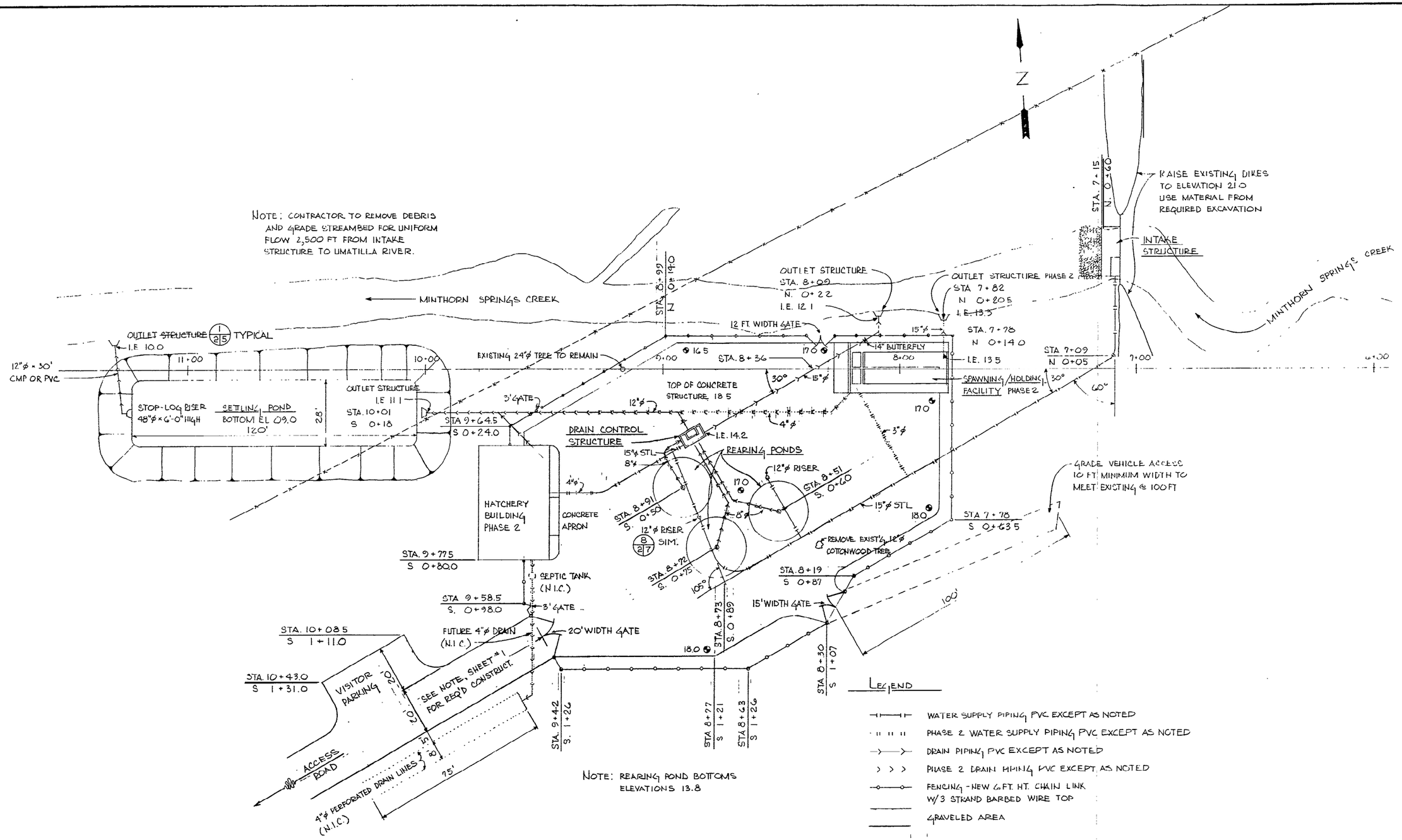

PLAN
1" = 20'

REVISION	DATE	DESCRIPTION	BY

UMATILLA INDIAN RESERVATION

MINTHORN SPRINGS HATCHERY — **PLOT PLAN**

DESIGNED	DRAWN	DATE	DWG NO
JLC	DWH	6/1980	IF-MISC-249-20

SHEET 2 OF 8

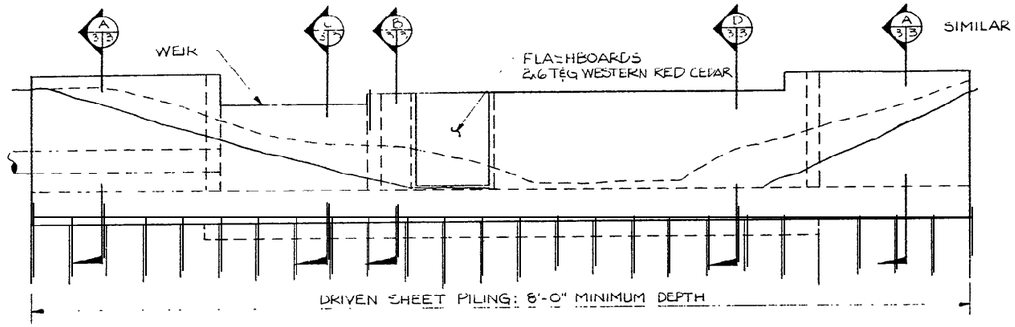

UPSTREAM ELEVATION
1/4" = 1'-0"

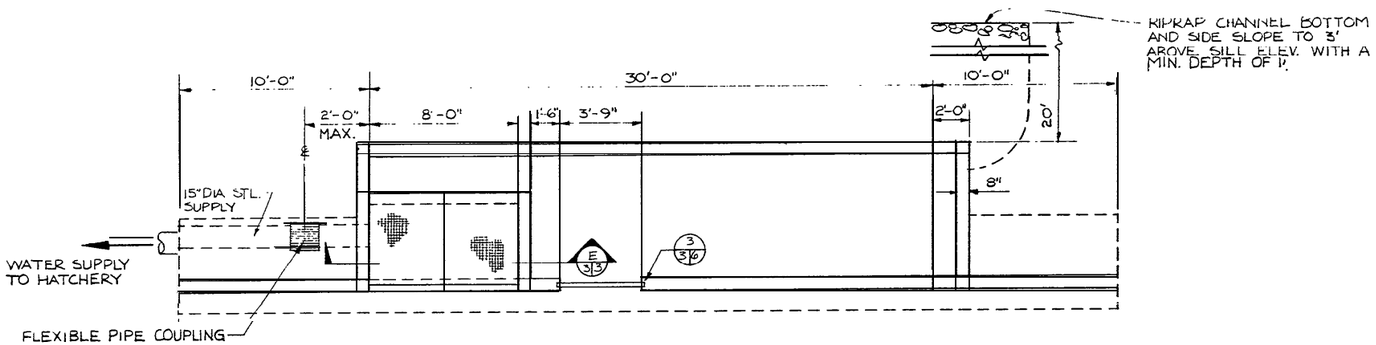

PLAN OF STRUCTURE
1/4" = 1'-0"

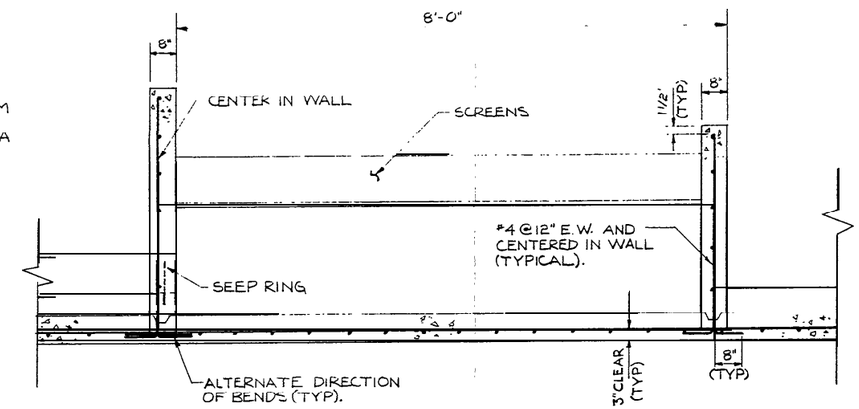

SECTION E 3/3
1/2" = 1'-0"

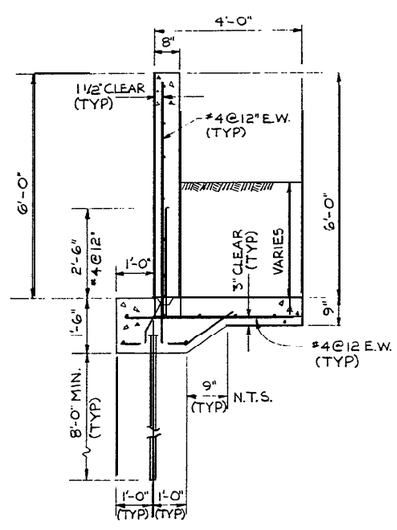

SECTION A 3/3
1/2" = 1'-0"

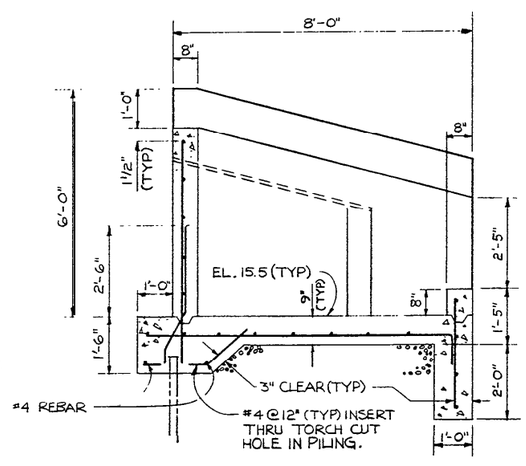

SECTION B 3/3
1/2" = 1'-0"

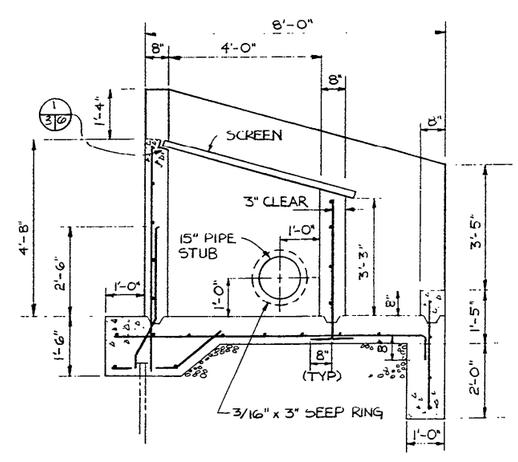

SECTION C 3/3
1/2" = 1'-0"

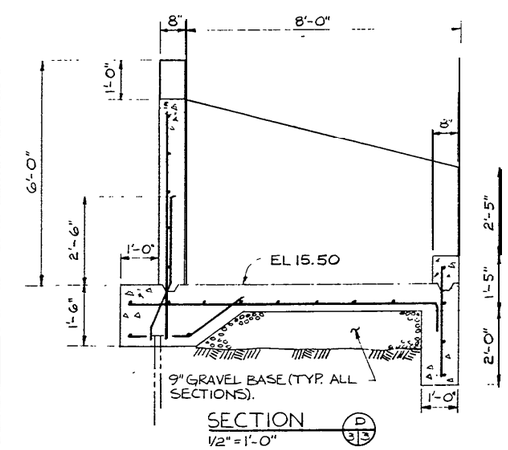

SECTION D 3/3
1/2" = 1'-0"

REVISION	DATE	DESCRIPTION	BY

UMATILLA INDIAN RESERVATION
MINTHORN SPRINGS HATCHERY — **SPRING INTAKE**

DESIGNED	DRAWN	DATE	DWG NO
JLC	BW	JUN 80	IF-MISC-249-3.0

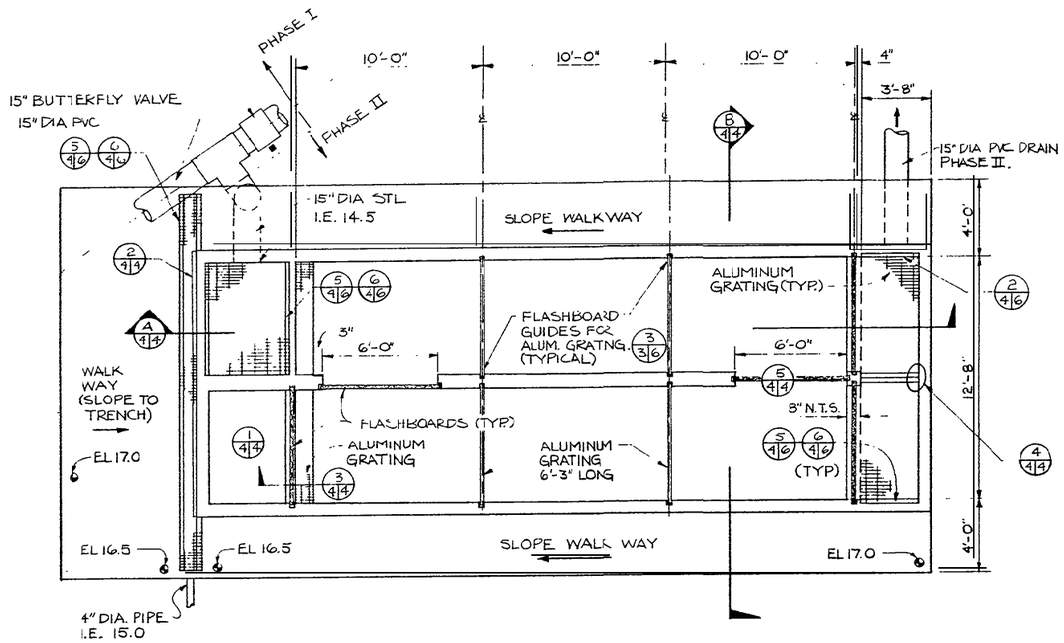

PLAN VIEW
1/4" = 1'-0"

NOTES:

1. REINFORCE ALL WALLS AND SLABS W/#4 REBAR 12" O.C. EACH WAY CENTERED IN WALLS AND 3" FROM BOTTOM OF SLABS.
2. FLASHBOARDS SHALL BE 2x6 T&G WESTERN RED CEDAR FOR FULL HEIGHT OF GUIDES.
3. CONTRACTOR SHALL FURNISH ALUM. GRATING W/BEARING BARS SPANNING BETWEEN GUIDES NOT USED FOR FLASHBOARDS, AS NOTED, FOR FULL HEIGHT OF GUIDES PLUS 2 SPARE PANELS MIN. WIDTH OF 2'-0".

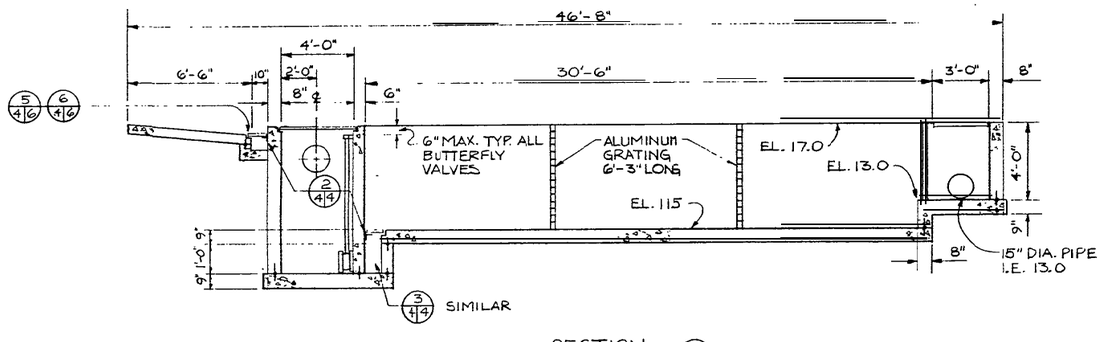

SECTION
1/4" = 1'-0"

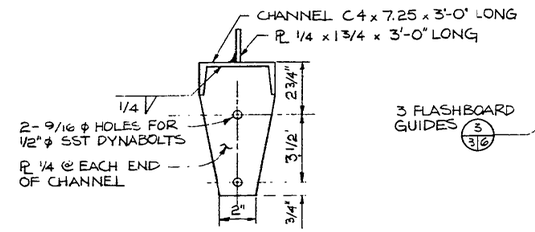

DETAIL
1/4 SCALE

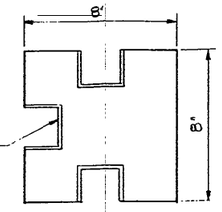

DETAIL
1/4 SCALE

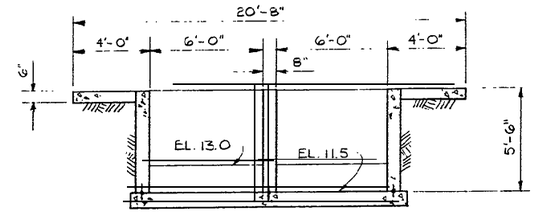

SECTION
1/4" = 1'-0"

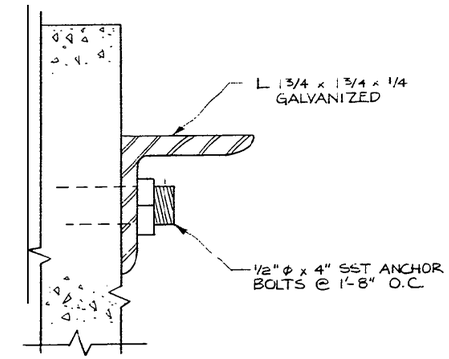

DETAIL
FULL SCALE

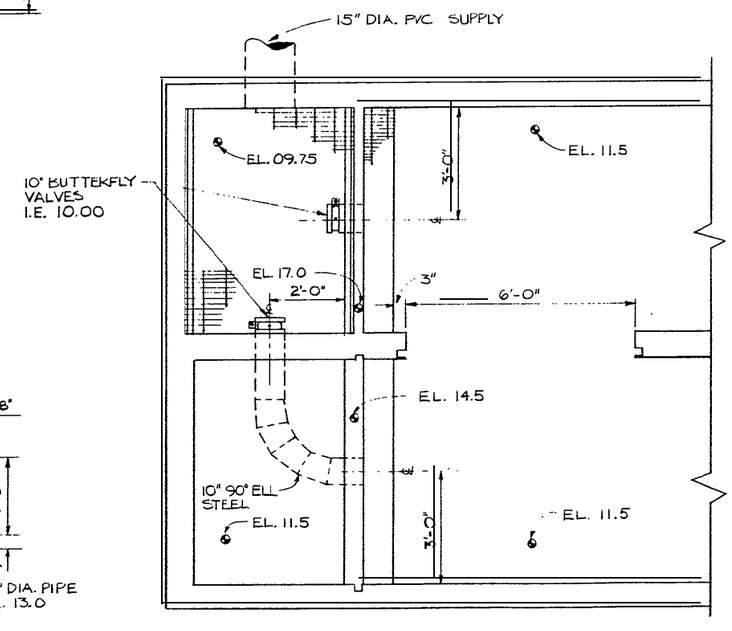

DETAIL
1/2" = 1'-0"

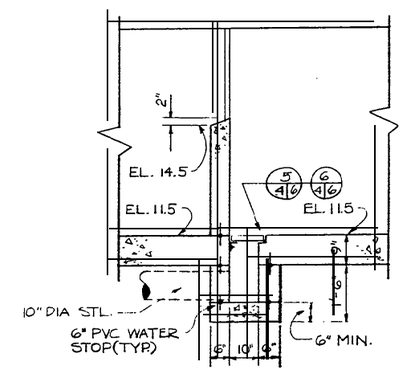

DETAIL
1/2" = 1'-0"

REVISION	DATE	DESCRIPTION	BY

UMATILLA INDIAN RESERVATION
MINTHORN SPRINGS HATCHERY

HOLDING/ SPAWNING FACILITY

DESIGNED	DRAWN	DATE	DWG. NO
JLC	BW	JUN 80	IF-MISC-249-4.0

SHEET 4 OF 8

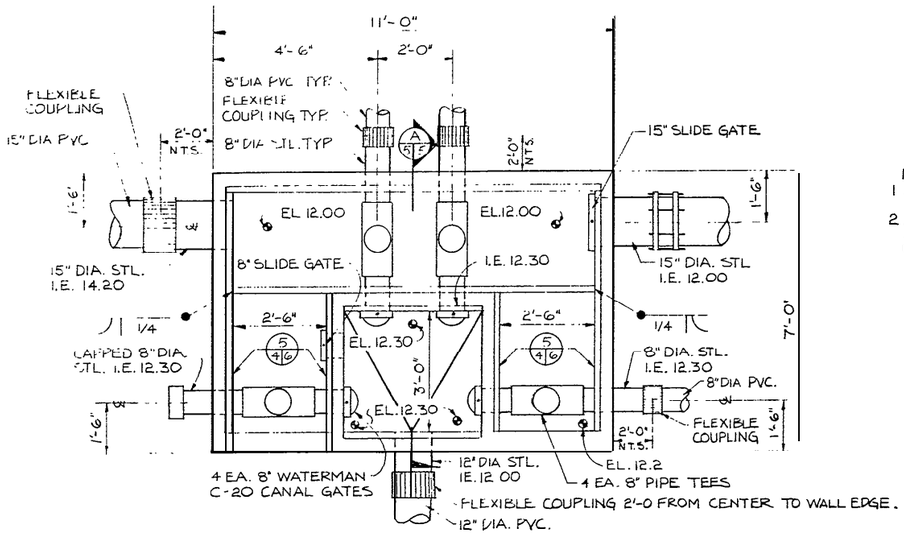

PLAN VIEW ~ DRAIN CONTROL STRUCTURE
1/2" = 1'-0"

NOTES:
1 ALL WALLS SHALL BE 6" THICK.
2 ALUMINUM GRATING W/BEARING BARS SPANING AS NOTED OVER ALL TOP OPENINGS.

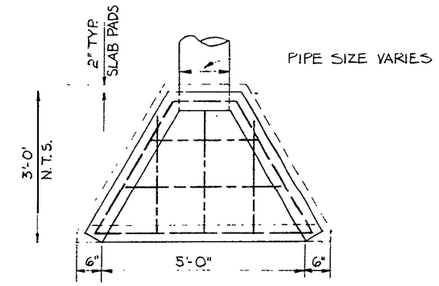

PLAN

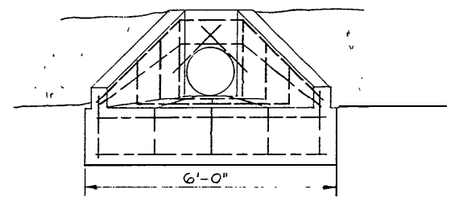

ELEVATION

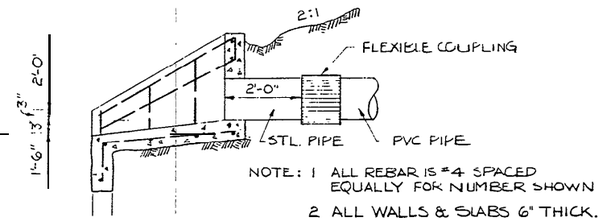

SECTION

NOTE: 1 ALL REBAR IS #4 SPACED EQUALLY FOR NUMBER SHOWN
2 ALL WALLS & SLABS 6" THICK.

OUTLET STRUCTURE ~ TYPICAL (1/2.5)
1/2" = 1'-0"

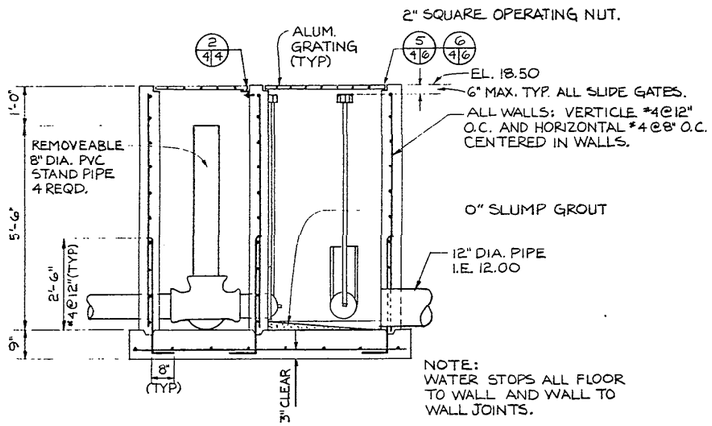

NOTE:
WATER STOPS ALL FLOOR TO WALL AND WALL TO WALL JOINTS.

SECTION (A/5.5)
1/2" = 1'-0"

REVISION	DATE	DESCRIPTION	BY

UMATILLA INDIAN RESERVATION
MINTHORN SPRINGS HATCHERY

WATER CONTROL STRUCTURE

DESIGNED	DRAWN	DATE	DWG. NO
JLC	BW	JUN 80	IF-MISC-249-5.0

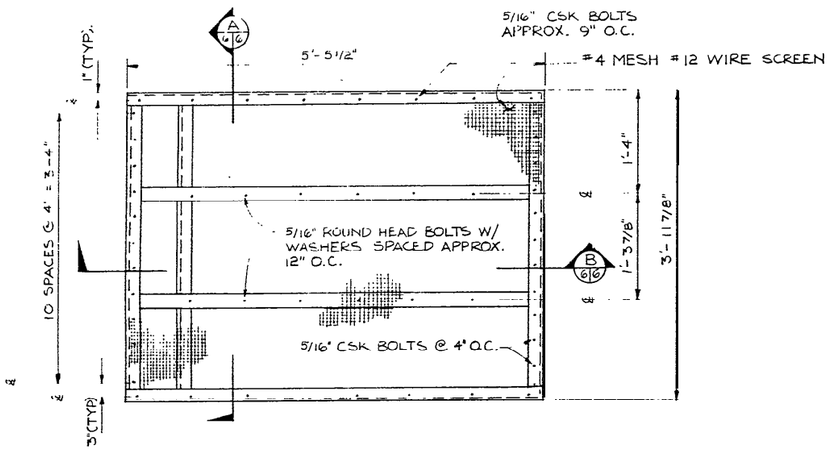

PLAN OF SCREEN
1" = 1'-0" (2 SCREENS REQD. FOR SPRING INTAKE STRUCTURE.)

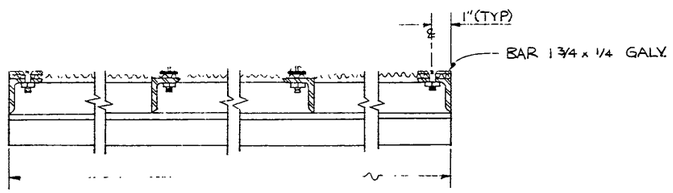

SECTION A/6/6
3" = 1'-0"

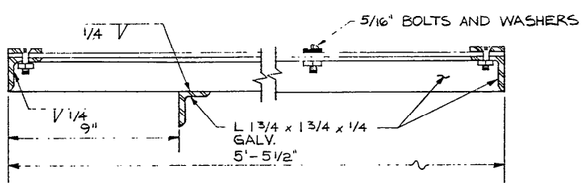

SECTION B/6/6
3" = 1'-0"

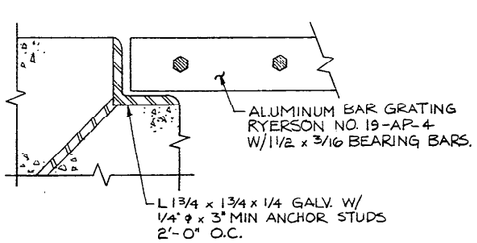

DETAIL 5/4/6
1/2 SCALE

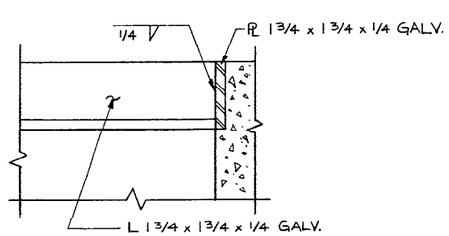

DETAIL 6/4/6
1/2 SCALE

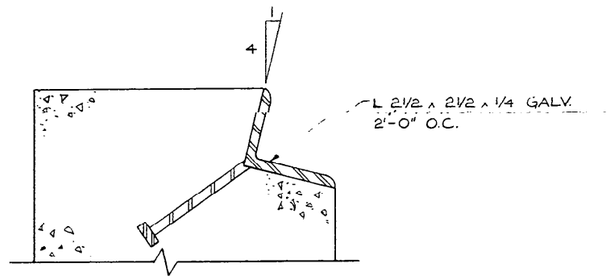

DETAIL 1/3/6
1/2 SCALE

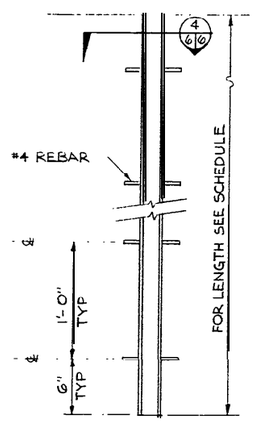

DETAIL~ FLASHBOARD GUIDE 3/3/6
1 1/2" = 1'-0"

SH.	STRUCTURE	LENGTH	NO. REQD.
3	SPRING INTAKE	5'-0"	1 PAIR
6	SPAWNING FACILITY	5'-6" 4'-0" 2'-6"	6 PAIR* 2 PAIR 1 PAIR

*BEND ANCHOR BARS 90° TO MAINTAIN 1" CLEAR FOR FLUSH CHANNEL LEG, INSTALLATION OF 1 PAIR ONLY.

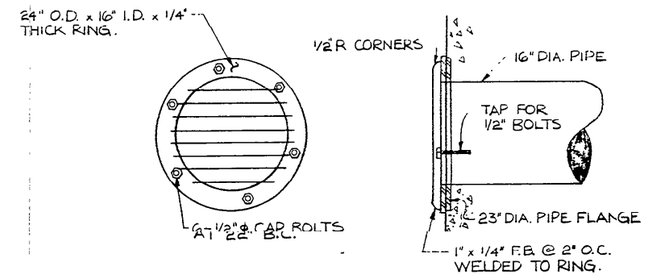

DETAIL 2/4/6
1" = 1'-0"

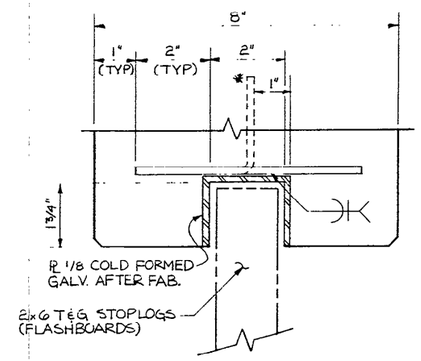

DETAIL~ FLASHBOARD GUIDE 4/3/6
1/2" = 1'-0"

REVISION	DATE	DESCRIPTION	BY

UMATILLA INDIAN RESERVATION
MINTHORN SPRINGS HATCHERY — **MISC. METALS**

DESIGNED	DRAWN	DATE	DWG NO
JLC	BW	JUN 80	IF-MISC-249-6.0

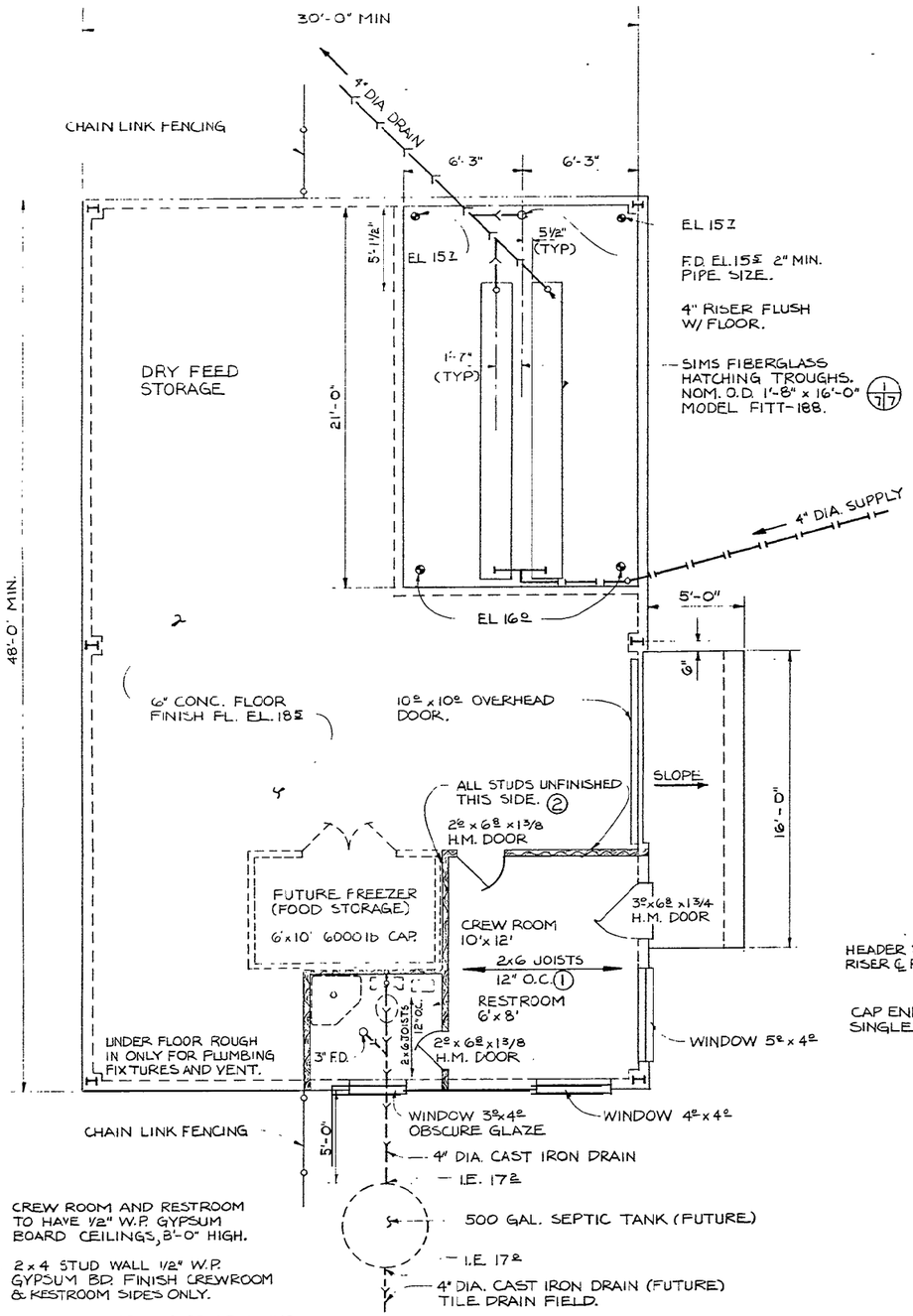

PLAN ~ HATCHERY BUILDING
1/4" = 1'-0"

NOTES:
1. CREW ROOM AND RESTROOM TO HAVE 1/2" W.P. GYPSUM BOARD CEILINGS, 8'-0" HIGH.
2. 2 x 4 STUD WALL 1/2" W.P. GYPSUM BD. FINISH CREWROOM & RESTROOM SIDES ONLY.
3. NO PAINTING, TAPING, OR SPACKLING REQD ON GYPSUM BD. SURFACES.
4. STUDS, JOISTS, PLATES, & HEADERS STD AND BTR GRADE.
5. WINDOWS ALUM. HORIZ. SLIDING DUAL GLAZE.
6. BLDG EAVE HEIGHT 12' MIN.

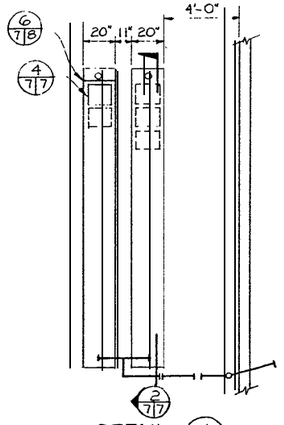

DETAIL 1/7
1/4" = 1'-0"

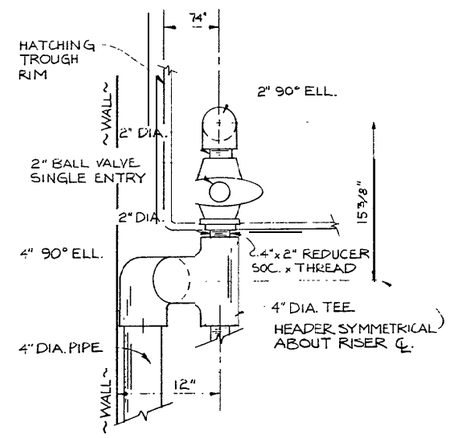

DETAIL 3/7
1 1/2" = 1'-0"

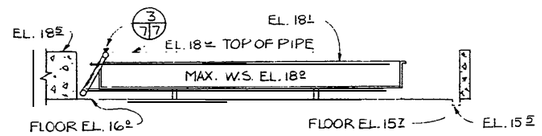

DETAIL 2/7
1/4" = 1'-0"

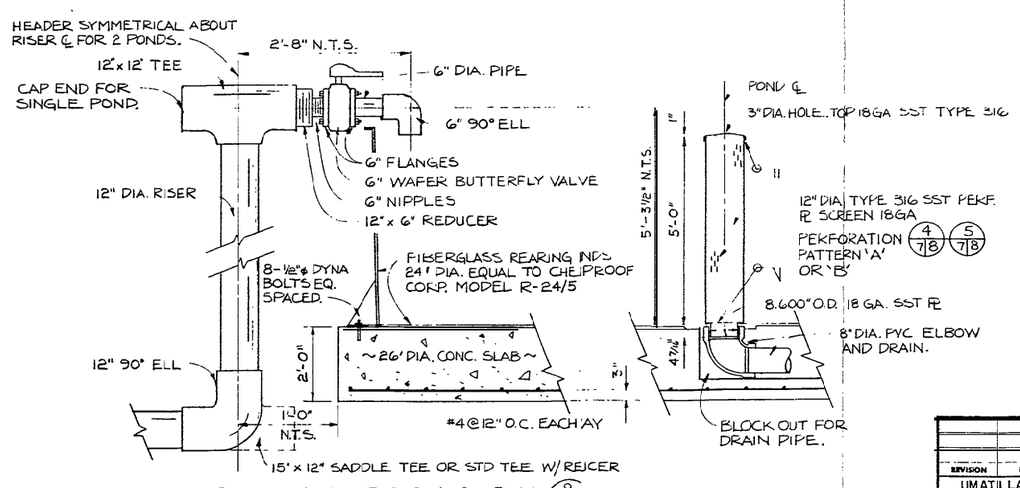

DETAIL ~ POND SUPPLY HEADER AND DRAIN
1/2" = 1'-0"

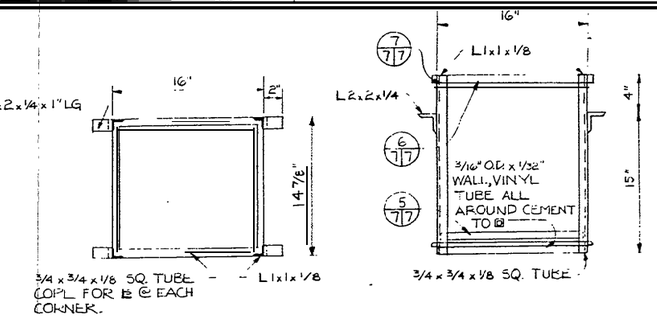

DETAIL ~ EGG FRAME HOLDER 4/7
1½" = 1'-0" (15 REQ'D)

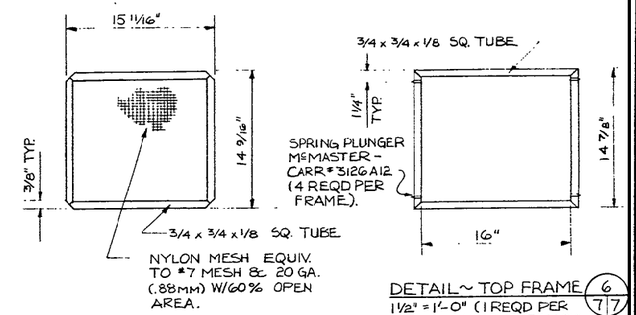

DETAIL ~ EGG FRAME 5/7
1½" = 1'-0" (15 PER HOLDER REQD)

DETAIL ~ TOP FRAME 6/7
1½" = 1'-0" (1 REQD PER HOLDER, REMOVEABLE)

MATERIAL	PER HOLDER
▢ 3/4 x 3/4 x 1/8	90 LFT
L 1 x 1 x 1/8	6½ LFT
L 2 x 2 x 1/4	½ LFT
SOFT NEOPRENE TUBE	5½ LFT
NYLON MESH	26 SF

NOTE: ALL SHAPES SHALL BE FIBERGLASS, RESIN WELD ALL JOINTS.

MATERIALS PER HOLDER

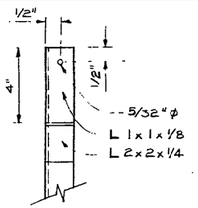

DETAIL 7/7
3" = 1'-0"

REVISION	DATE	DESCRIPTION	BY

UMATILLA INDIAN RESERVATION
MINTHORN SPRINGS HATCHERY

HATCHERY BLDG. & DETAILS

DESIGNED	DRAWN	DATE	DWG NO
JLC	BW	JUN 80	IF - MISC - 249 - 7.0

SHEET 7 OF 8

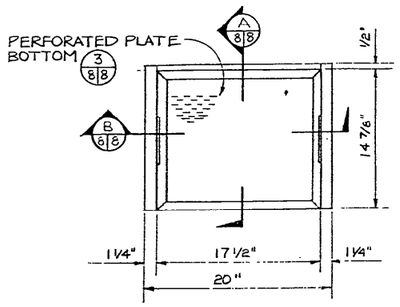

PLAN ~ HATCHING BASKET
1 1/2" = 1'-0" 10 REQD PER TROUGH

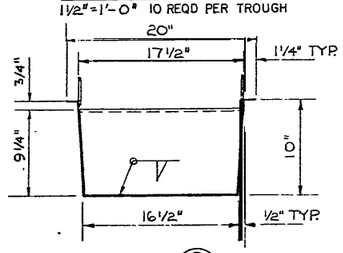

SECTION B 8|8
1 1/2" = 1'-0"

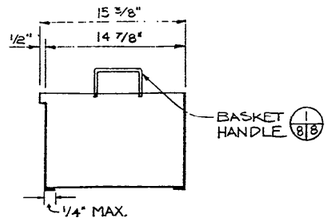

SECTION A 8|8
1 1/2" = 1'-0"

NOTES: 1 SIDES AND BOTTOM 18 GA. TYPE 316 SST.

2 CONTINUOUS WELD ALL JOINTS FINISH ALL WELDS SMOOTH.

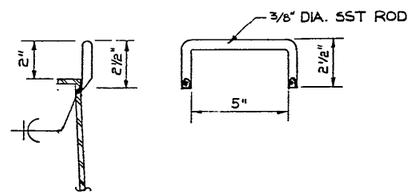

DETAIL ~ BASKET HANDLE 1/8|8
3" = 1'-0"

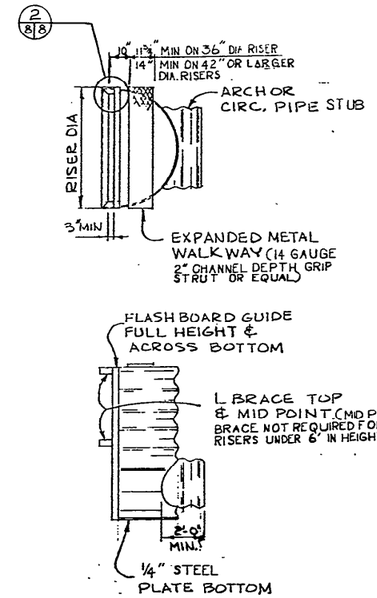

PLAN, ELEVATION ~ FLASHBOARD RISER
N.T.S.

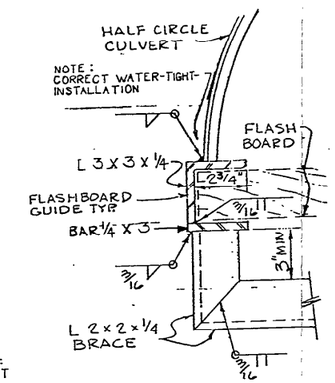

DETAIL 2/8|8
N.T.S.

NOTE: A FORMED 1/4" TH. CHANNEL MAY BE SUBSTITUTED FOR THE WELDED FLASHBOARD GUIDE SHOWN ABOVE.

FURNISH 3 x 6 T&G WESTERN RED CEDAR FLASHBOARDS FOR FULL HEIGHT OF GUIDE.

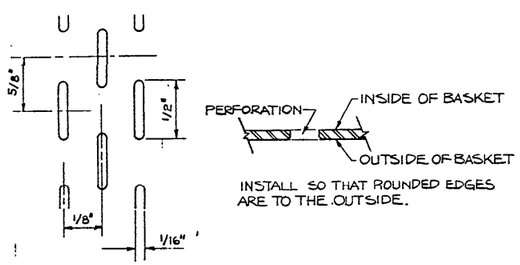

DETAIL ~ PERFORATION PLATE BOTTOM 3/8|8
N.T.S.

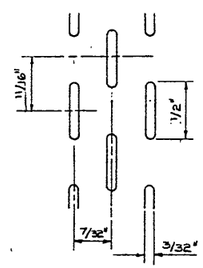

DETAIL ~ PERFORATION PATTERN 'B' 4/7|8
N.T.S.
NOTE: FURNISH 1 PATTERN 'B' PER POND

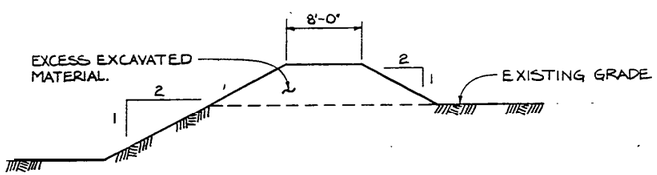

TYPICAL SETTLING POND PROFILE
N.T.S.

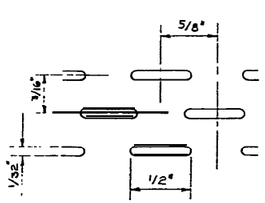

NOTE 1 ALL PATTERN 'A' SLOTS HORIZONTAL
2 FURNISH 1 ONLY PATTERN 'A' 12" DIA 22 GA DRAIN SCREEN

DETAIL ~ PERFORATION PATTERN 'A' 5/7|8
N.T.S.

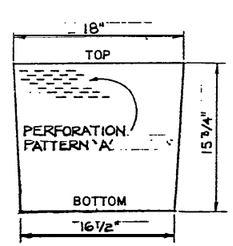

DETAIL ~ TROUGH SCREEN 6/7|8
1 1/2" = 1'-0"
FURNISH 2 PER TROUGH, FAB. FROM 22 GA. TYPE 316 SST.

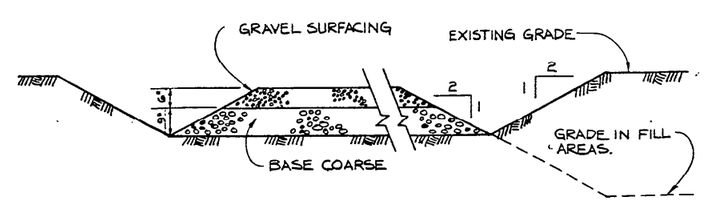

TYPICAL SURFACING PROFILE
N.T.S.

REVISION	DATE	DESCRIPTION	BY

UMATILLA INDIAN RESERVATION
MINTHORN SPRINGS HATCHERY

MISC. STRUCTURES & DETAILS

DESIGNED	DRAWN	DATE	DWG. NO.
JLC	BW	JUN 80	IF-MISC-249-8.0

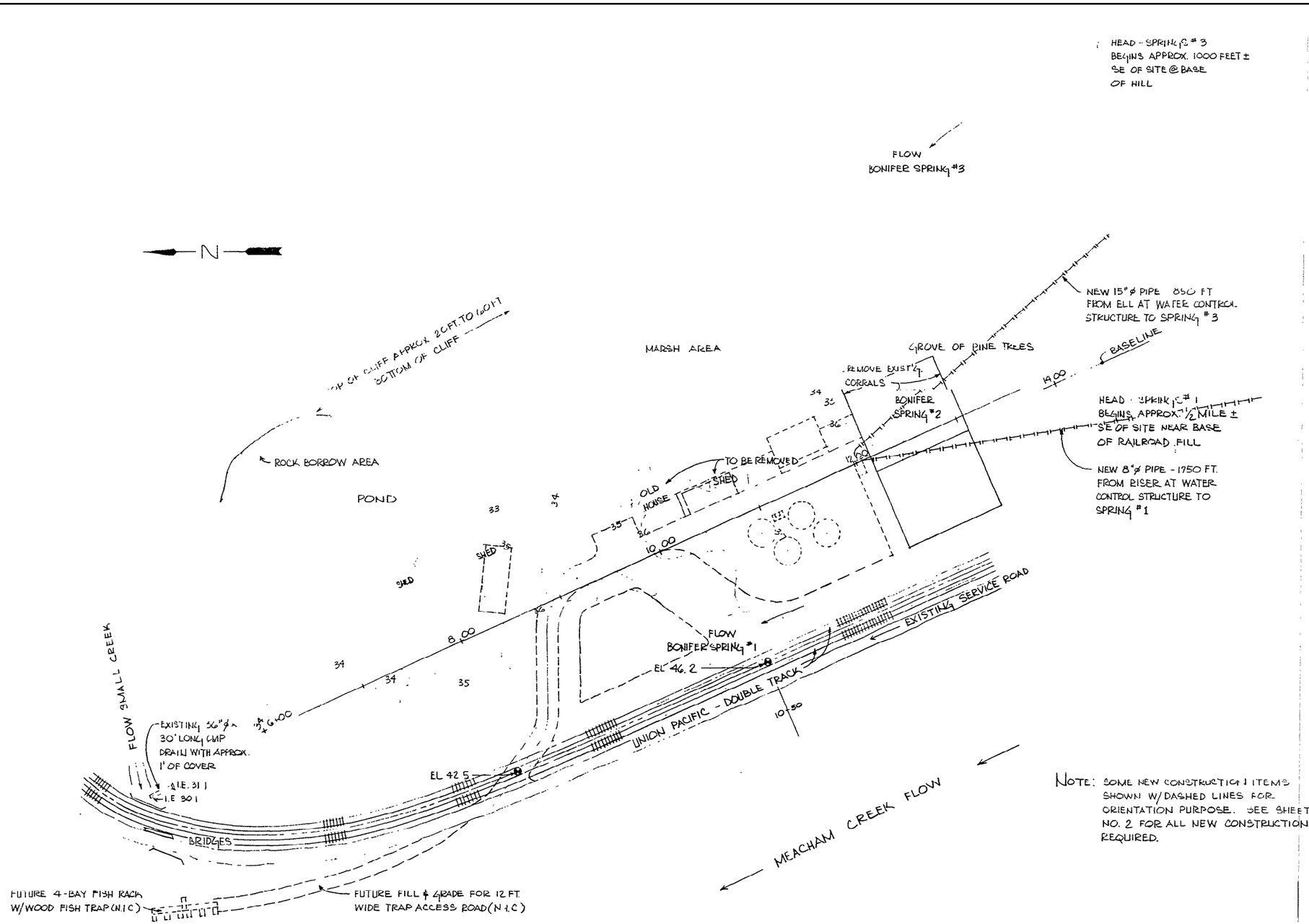

NOTE: SOME NEW CONSTRUCTION ITEMS SHOWN W/DASHED LINES FOR ORIENTATION PURPOSE. SEE SHEET NO. 2 FOR ALL NEW CONSTRUCTION REQUIRED.

SITE TOPOGRAPHY

SCALE 1" = 50'

(FROM SURVEY MARCH 22, 1979)

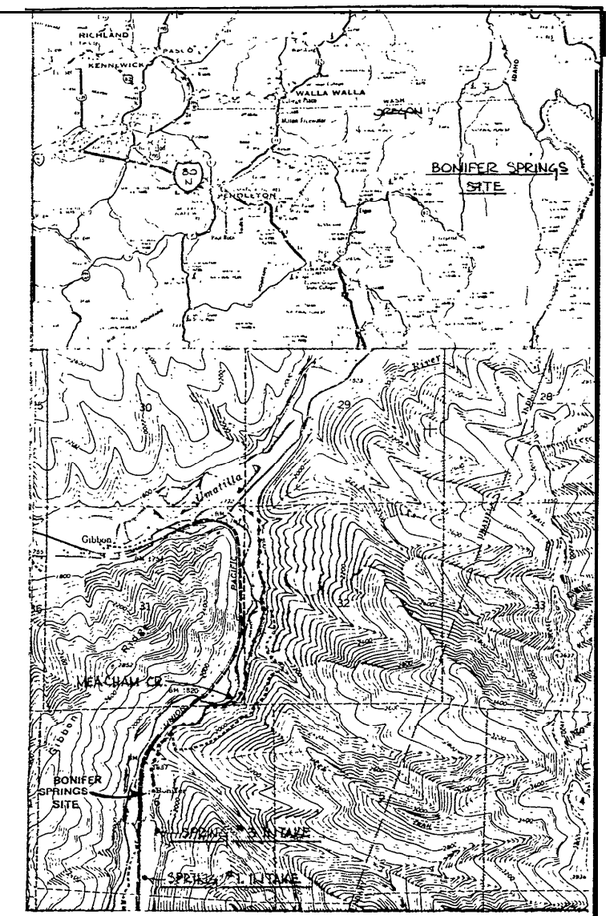

— — — EXISTING UNION PACIFIC SERVICE ROAD & TRACKING

• • • ALTERNATE ACCESS, UNIMPROVED

EXHIBIT 6B

THIS DRAWING IS AN APPROXIMATELY 1/2 SIZE REDUCTION OF THE WORKING DRAWING AND INDICATED SCALES MUST BE ADJUSTED ACCORDINGLY. SEE SPECS FOR AVAILABILITY OR FULL SIZE PRINTS.

REVISION	DATE	DESCRIPTION	BY

UMATILLA INDIAN RESERVATION

BONIFER SPRINGS HATCHERY — **SITE MAPS**

DESIGNED	DRAWN	DATE	DWG NO
JLC	DWH	6/1980	IF-MISC-248-1.0

SHEET 1 OF 9

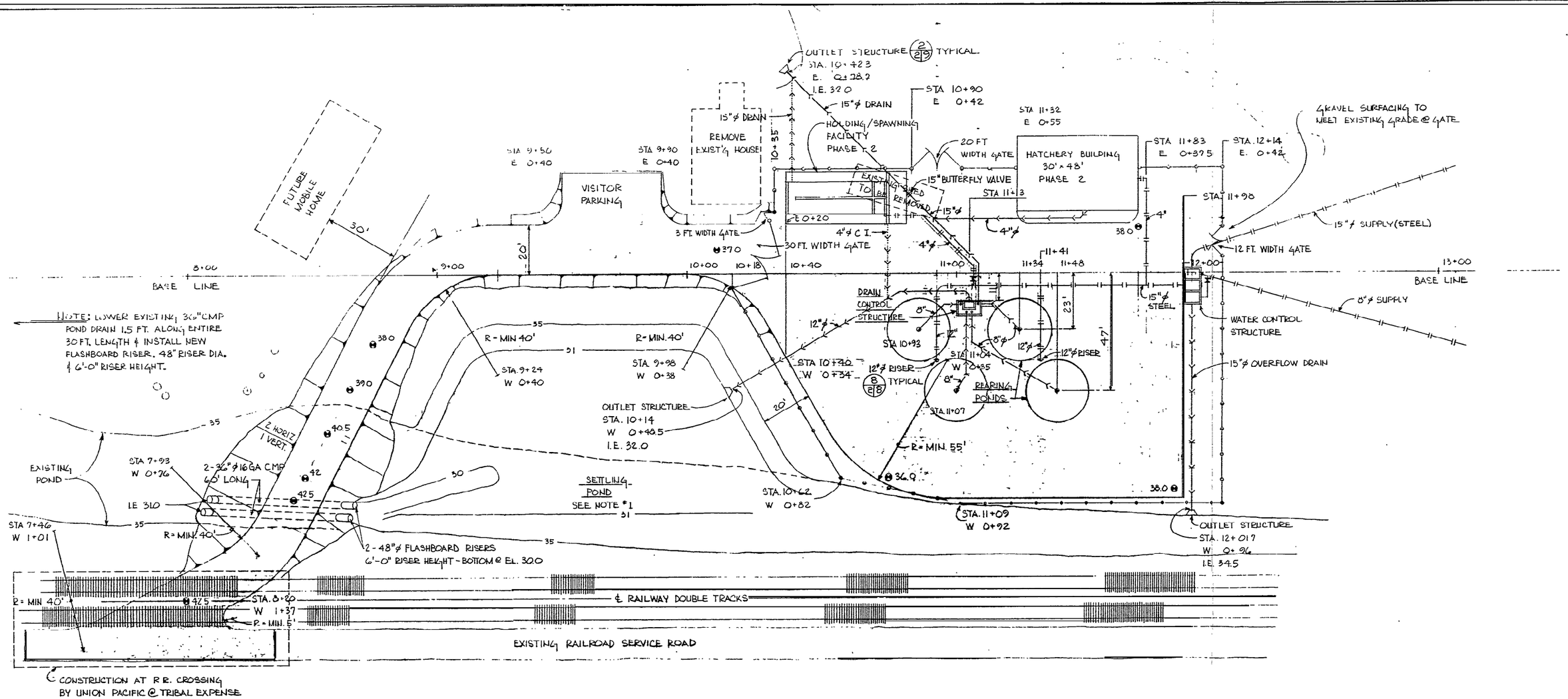

NOTES:

1. ENTIRE POND BOTTOM MAY BE EXCAVATED TO EL. 30.0 FOR ACCESS ROAD FILL. SLOPE POND SIDES 1 VERTICAL TO 2 HORIZONTAL.
2. REARING PONDS BOTTOM EL. 36.2.

PLAN
1" = 20'

LEGEND

- PHASE I WATER SUPPLY PIPING PVC EXCEPT AS NOTED
- PHASE 2 WATER SUPPLY PIPING PVC EXCEPT AS NOTED
- PHASE I DRAIN PIPING PVC EXCEPT AS NOTED
- PHASE 2 DRAIN PIPING PVC EXCEPT AS NOTED
- GRAVELED AREA
- FENCING - 6 FT HIGH CHAIN LINK W/3 STRAND BARBED WIRE TOP PHASE 2.

MEACHAM CREEK FLOW

← TO UMATILLA RIVER

REVISION	DATE	DESCRIPTION	BY

UMATILLA INDIAN RESERVATION

BONIFER SPRINGS HATCHERY — **PLOT PLAN**

DESIGNED	DRAWN	DATE	DWG. NO.
JLC	DWH	6/1990	IF-MISC-248-2.0

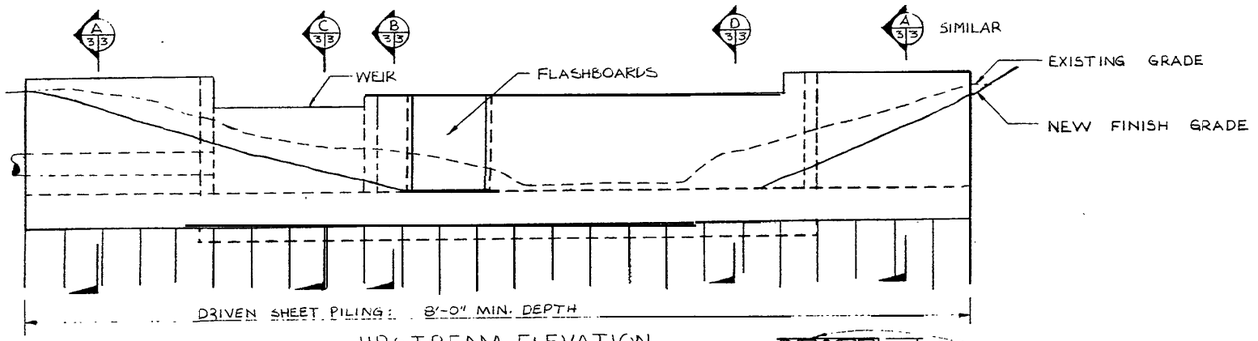

UPSTREAM ELEVATION
1/4" = 1'-0"

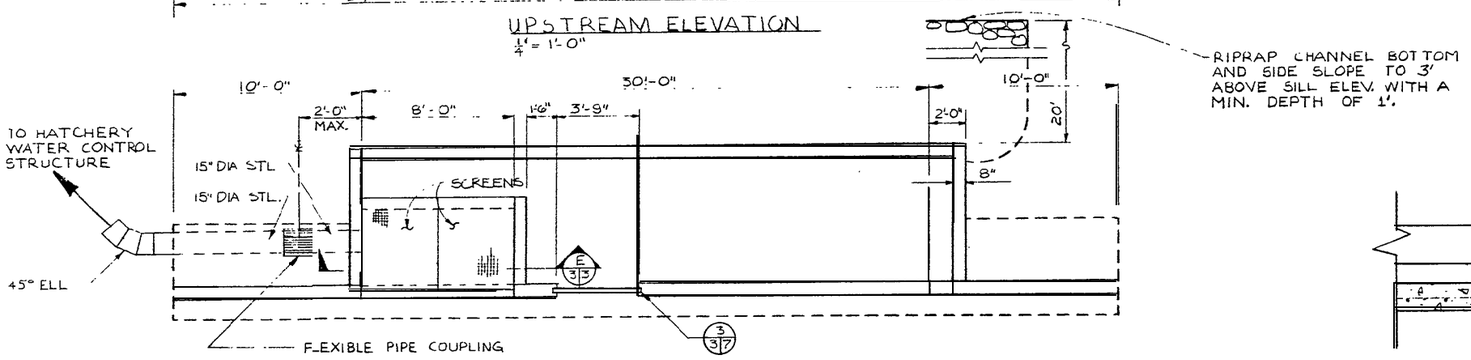

PLAN OF STRUCTURE
1/4" = 1'-0" (SEE SHEET 7 FOR SCREEN SPECS.)

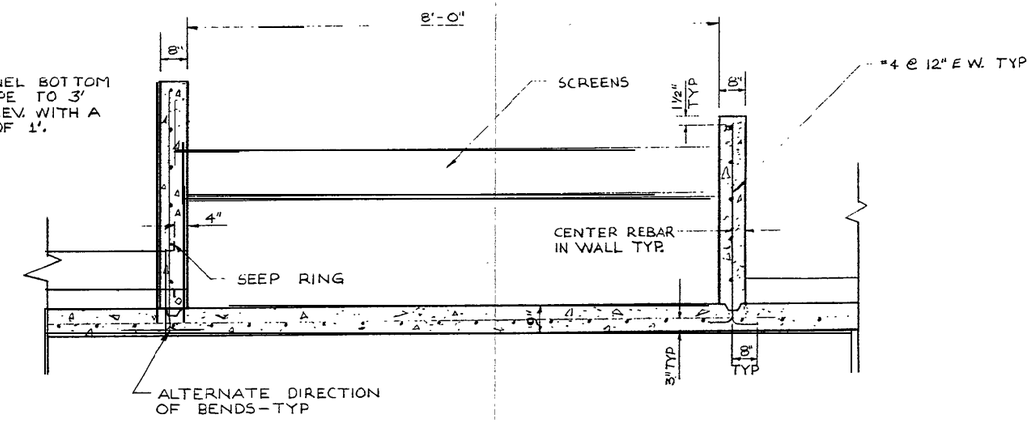

SECTION E 3/3
1/2" = 1'-0"

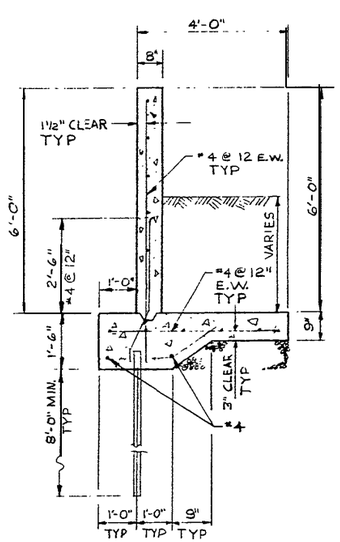

SECTION A 3/3
1/2" = 1'-0"

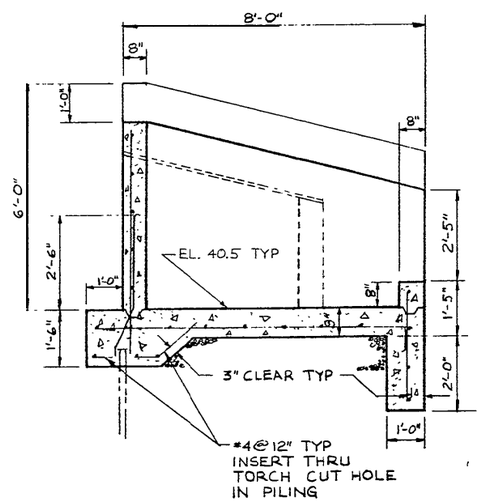

SECTION B 3/3
1/2" = 1'-0"

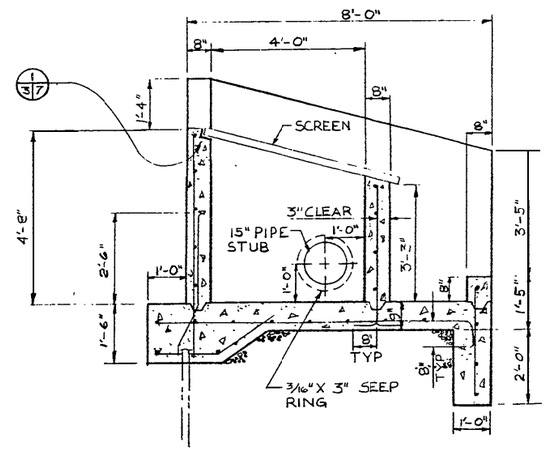

SECTION C 3/3
1/2" = 1'-0"

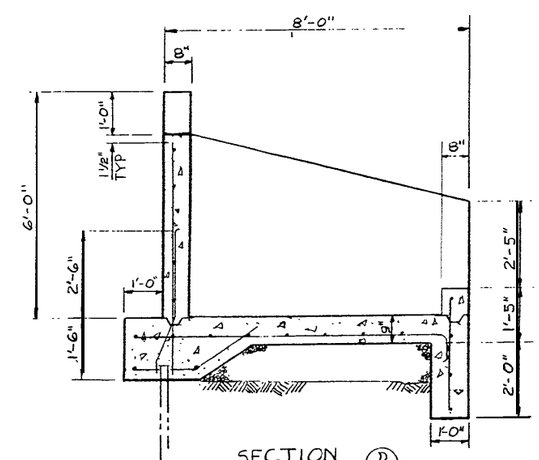

SECTION D 3/3
1/2" = 1'-0"

REVISION	DATE	DESCRIPTION	BY

UMATILLA INDIAN RESERVATION
BONIFER SPRINGS HATCHERY #3 SPRING INTAKE

DESIGNED	DRAWN	DATE	DWG. NO
JLC	BW	DEC 79	IF-MISC-248-3.0

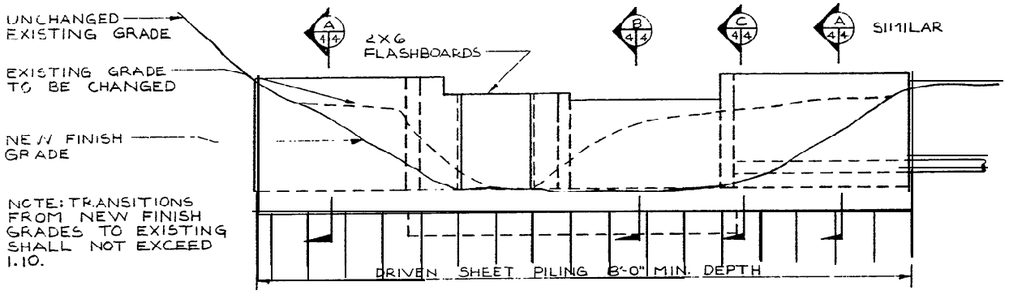

UPSTREAM ELEVATION
1/4" = 1'-0"

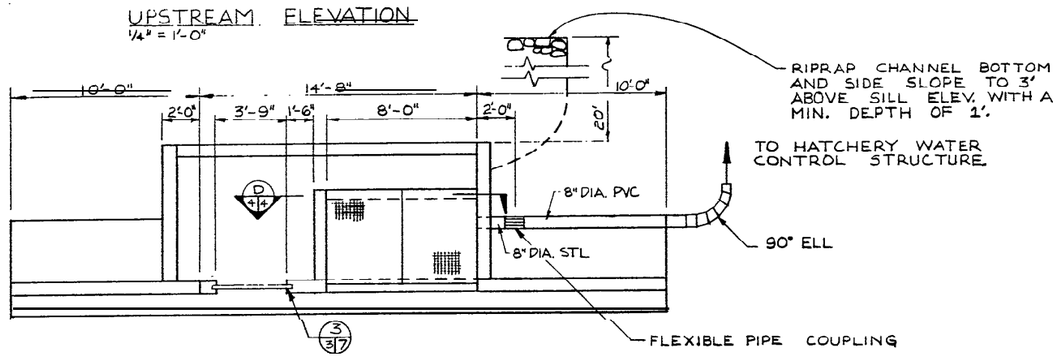

PLAN OF STRUCTURE
1/4" = 1'-0" (SEE SHEET NO. 7 FOR SCREEN SPECS.)

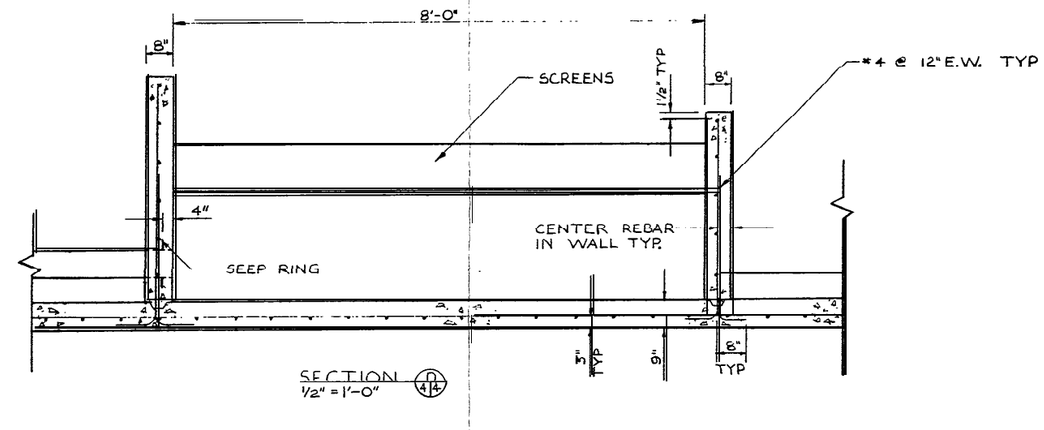

SECTION D
1/2" = 1'-0"

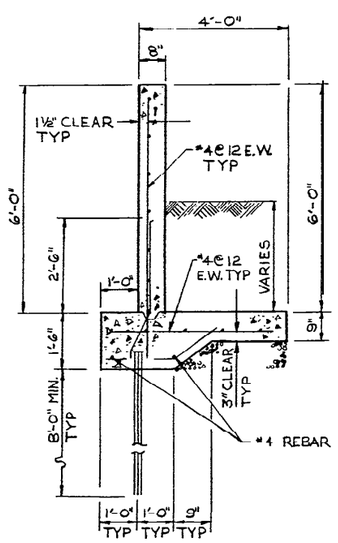

SECTION A
1/2" = 1'-0"

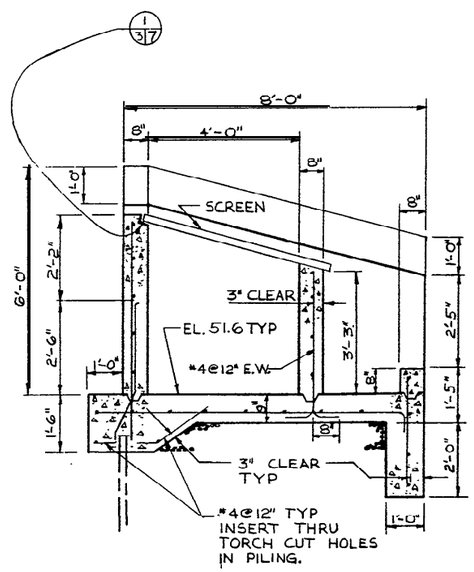

SECTION B
1/2" = 1'-0"

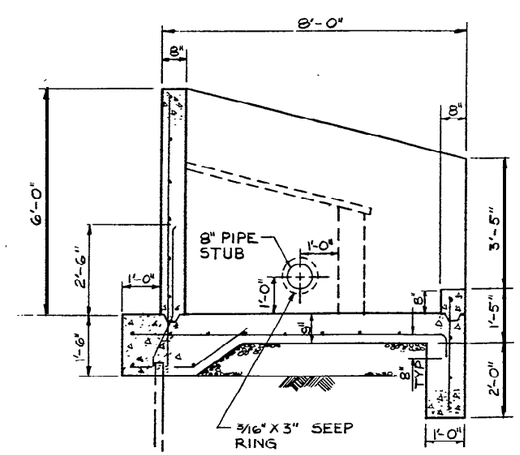

SECTION C
1/2" = 1'-0"

REVISION	DATE	DESCRIPTION	BY

UMATILLA INDIAN RESERVATION

BONIFER SPRINGS HATCHERY #1 SPRING INTAKE

DESIGNED	DRAWN	DATE	DWG. NO.
JLC	BW	DEC 79	IF-MISC-248-4.0

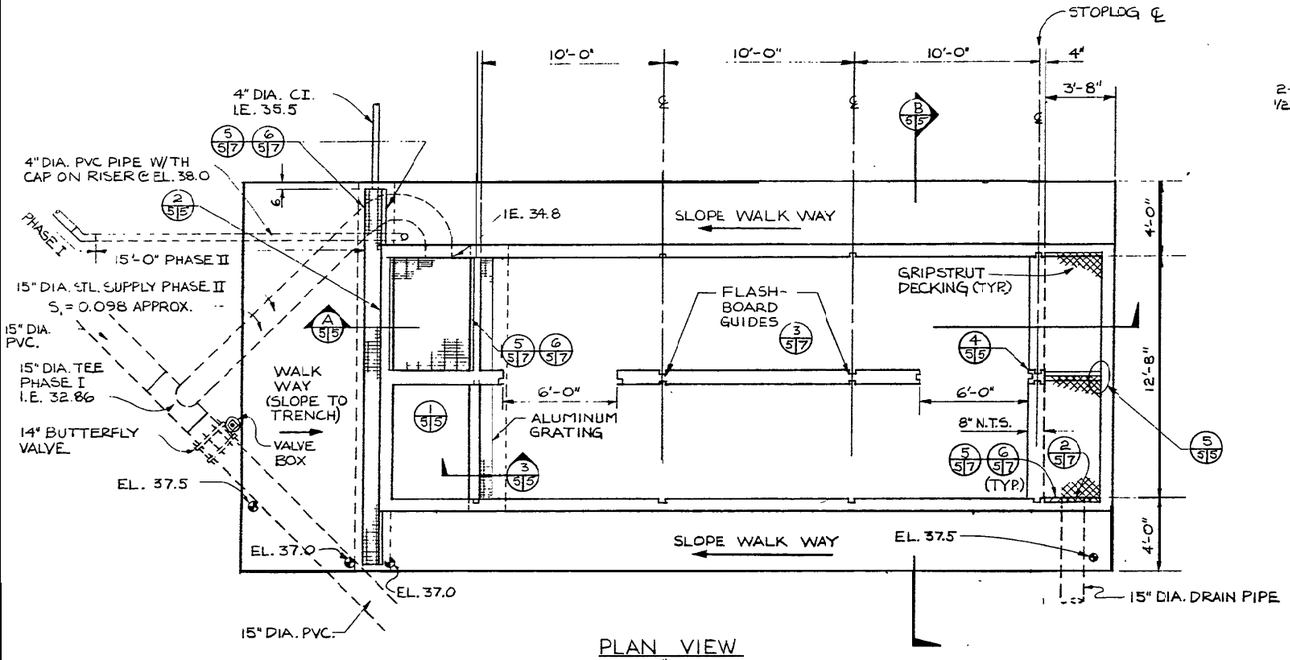

PLAN VIEW
1/4" = 1'-0"

NOTE: REINFORCE ALL WALLS & SLABS W/ #4 REBAR 12" O.C. EACH WAY CENTERED IN WALLS & 3" FROM BOTTOM OF SLABS.

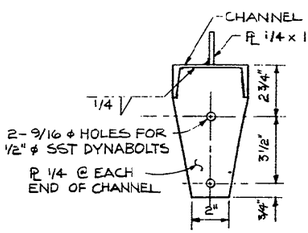

DETAIL 4/5 5/5
1/4 SCALE

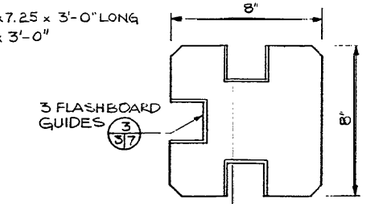

DETAIL 5/5 5/5
1/4 SCALE

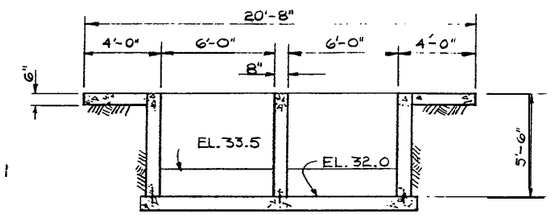

SECTION 8/5 5/5
1/4" = 1'-0"

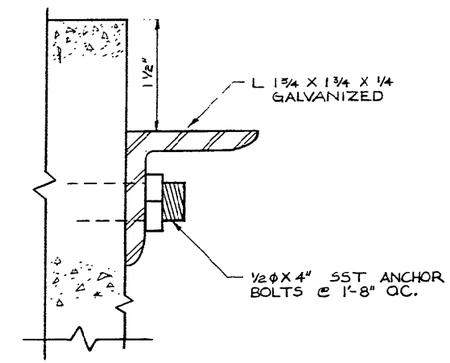

DETAIL 2/5 5/5
FULL SCALE

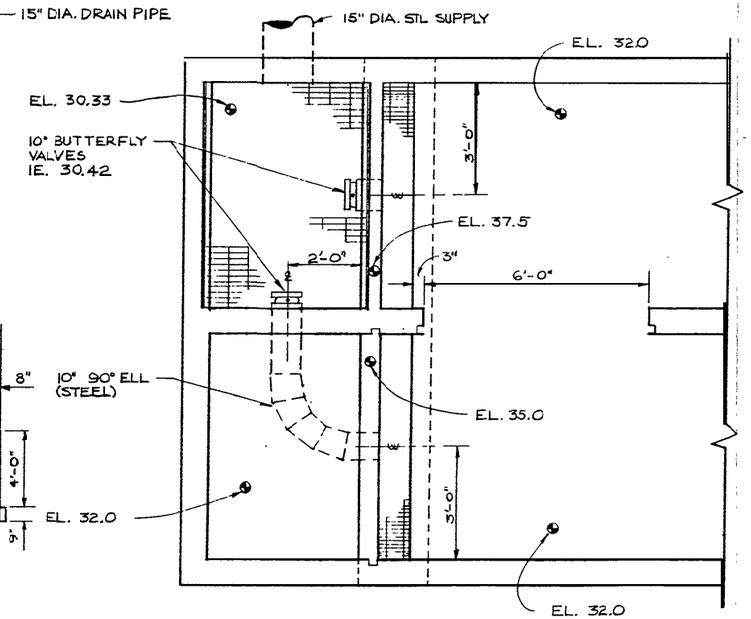

DETAIL 1/5 5/5
1/2" = 1'-0"

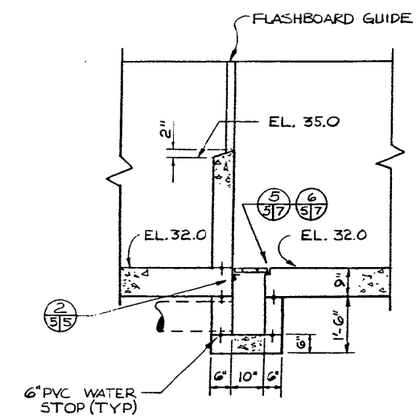

DETAIL 3/5 5/5
1/2" = 1'-0"

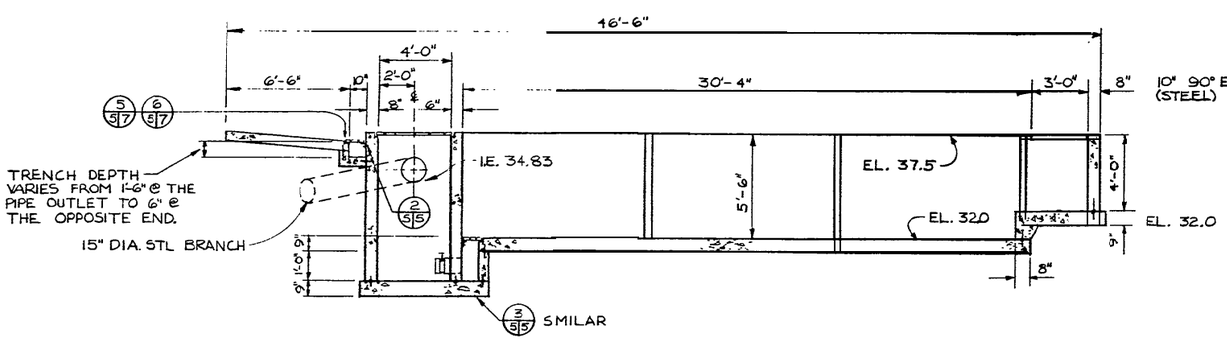

SECTION A 5/5
1/4" = 1'-0"

REVISION	DATE	DESCRIPTION	BY

UMATILLA INDIAN RESERVATION
BONIFER SPRINGS HATCHERY

HOLDING/
SPAWNING FACILITY

DESIGNED	DRAWN	DATE	DWG. NO
JLC	BW	JAN 80	IF-MISC-248-5.0

SHEET 5 OF 9

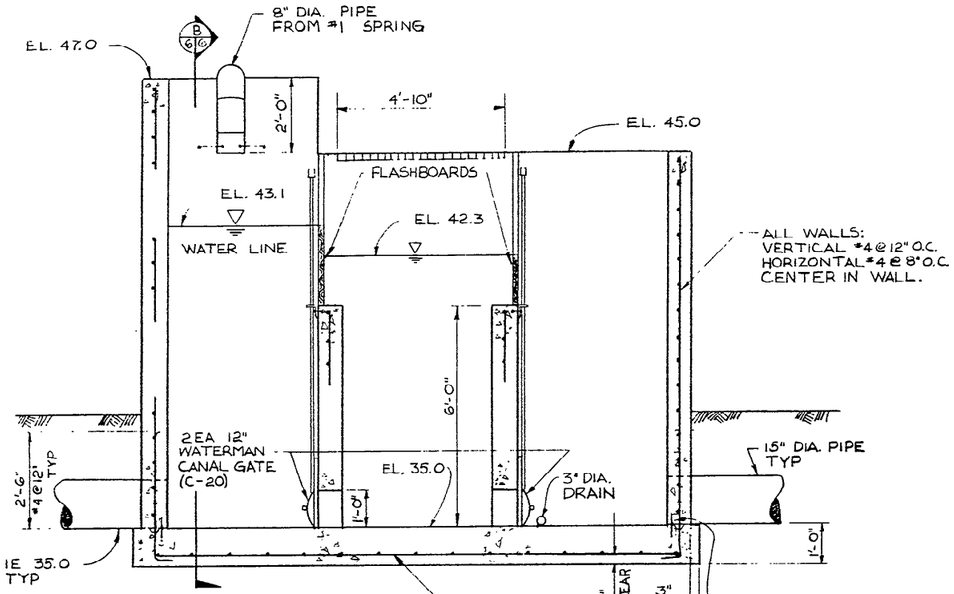

SECTION A 6/6
1/2" = 1'-0"

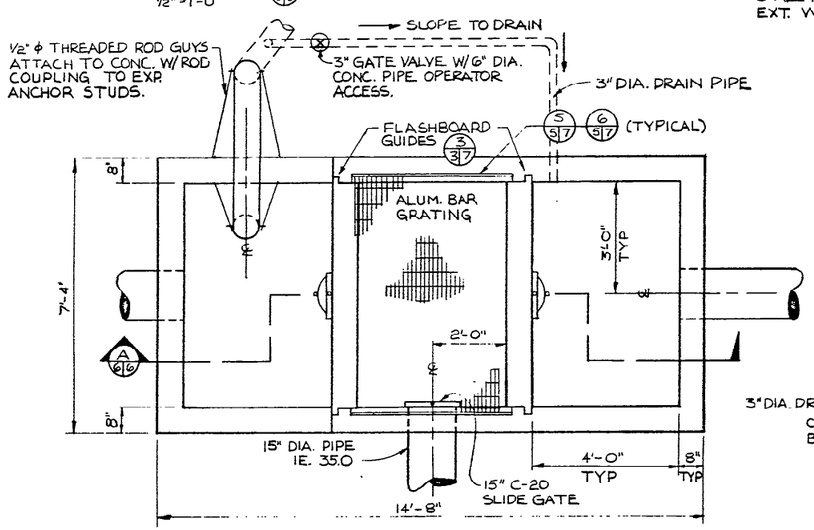

PLAN VIEW - WATER CONTROL STRUCTURE
1/2" = 1'-0"

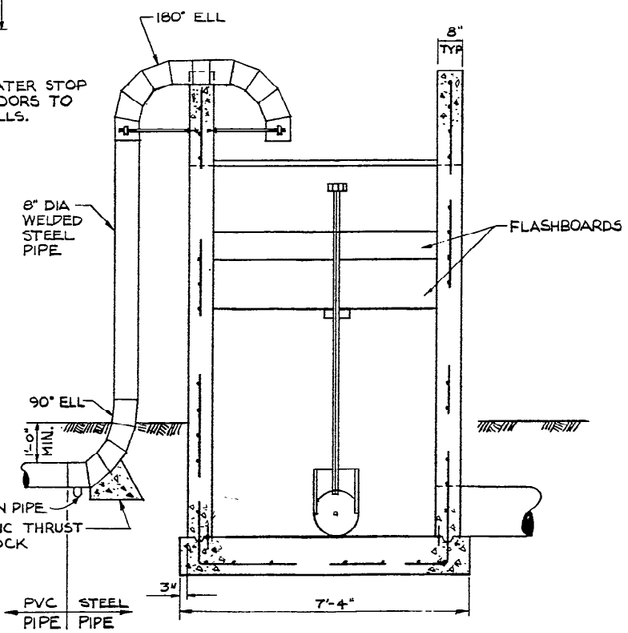

SECTION B 6/6
1/2" = 1'-0"

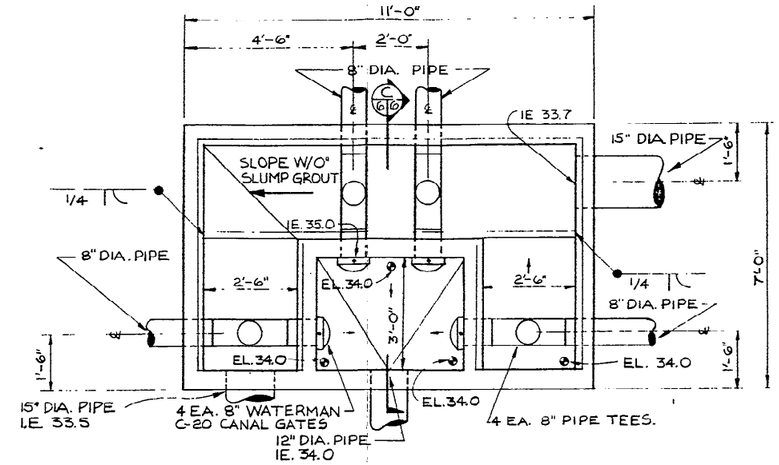

NOTE:
ALL WALLS SHALL BE 6" THICK.

PLAN VIEW - DRAIN CONTROL STRUCTURE
1/2" = 1'-0"

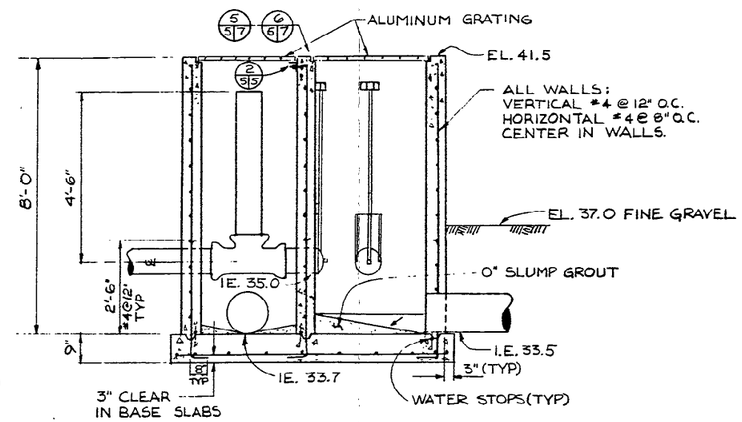

SECTION C 6/6
1/2" = 1'-0"

NOTE: 1 ALL BURIED PIPING SHALL HAVE A FLEXIBLE JOINT OR COUPLING WITHIN 2 FT. OF THE CONCRETE SURFACE.

2 ALL 15" DIA. PRESSURE PIPE SHALL BE STEEL.

REVISION	DATE	DESCRIPTION	BY

UMATILLA INDIAN RESERVATION
BONIFER SPRINGS HATCHERY

WATER CONTROL STRUCTURES

DESIGNED	DRAWN	DATE	DWG. NO.
JLC	BW	JAN 80	IF-MISC-248-6.0

SHEET 6 OF 9

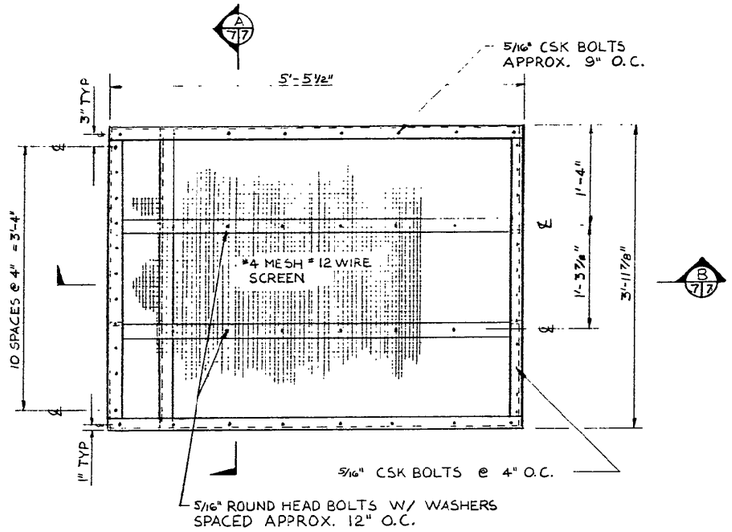

PLAN OF SCREEN
1" = 1'-0" (2 SCREENS REQUIRED EA. STRUCTURE)

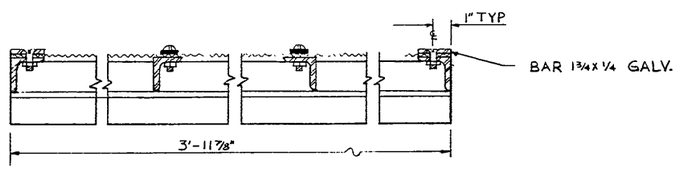

SECTION A 7/7
3" = 1'-0"

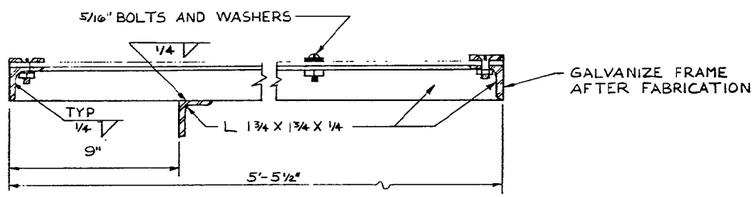

SECTION B 7/7
3" = 1'-0"

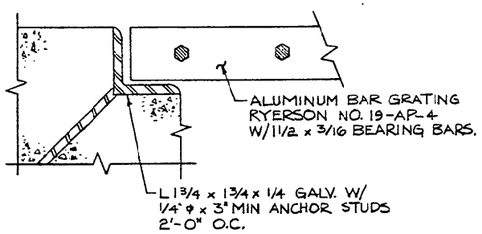

DETAIL 5 5/7
HALF SCALE

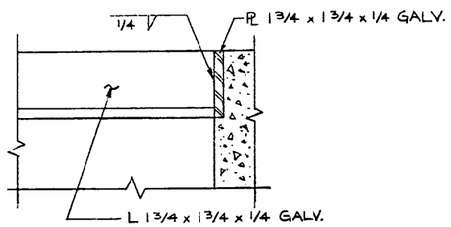

DETAIL 6 5/7
HALF SCALE

INTERLOCKING STEEL SHEETING DETAIL
(12 GAUGE)

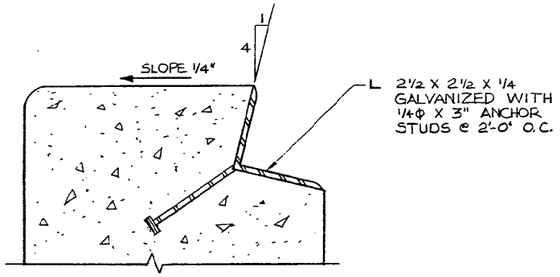

DETAIL 1 3/7
HALF SCALE

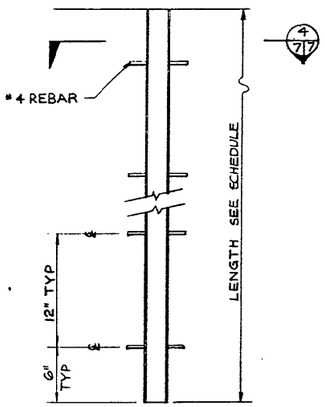

FLASHBOARD GUIDE 3 3/7
1½" = 1'-0"

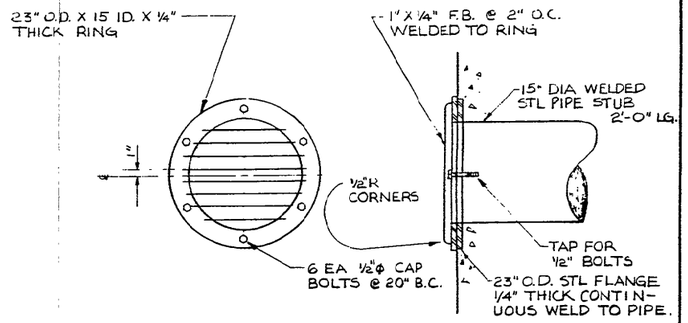

DETAIL 2 5/7
1" = 1'-0"

(TOP VIEW)

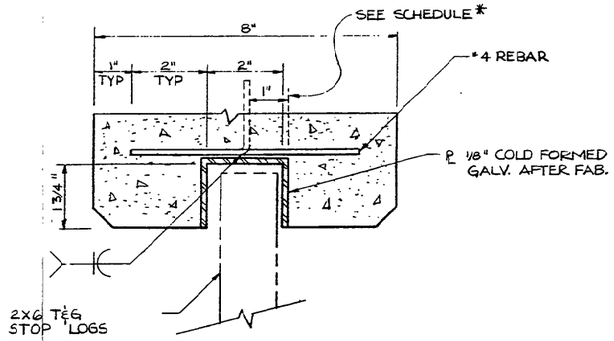

FLASHBOARD GUIDE DETAIL 4 7/7
HALF SCALE

FLASHBOARD GUIDE SCHEDULE

SH	STRUCTURE	LENGTH	NO. REQ'D
3	#3 SPRING INTAKE	5'-0"	1 PAIR
4	#1 SPRING INTAKE	5'-0"	1 PAIR
5	SPAWNING FACILITY	5'-6"	6 PAIR*
		4'-0"	2 PAIR
		2'-6"	1 PAIR
6	WATER CONTROL STRUCTURE	4'-0"	2 PAIR

* BEND ANCHOR BARS 90° TO MAINTAIN 1" CLEAR FOR FLUSH CHANNEL LEG INSTALLATION OF 1 PAIR ONLY.

REVISION	DATE	DESCRIPTION	BY

UMATILLA INDIAN RESERVATION
BONIFER SPRINGS HATCHERY — INTAKE MISC. METAL

DESIGNED	DRAWN	DATE	DWG NO
JLC	BW	DEC 79	IF-MISC-248-7.0

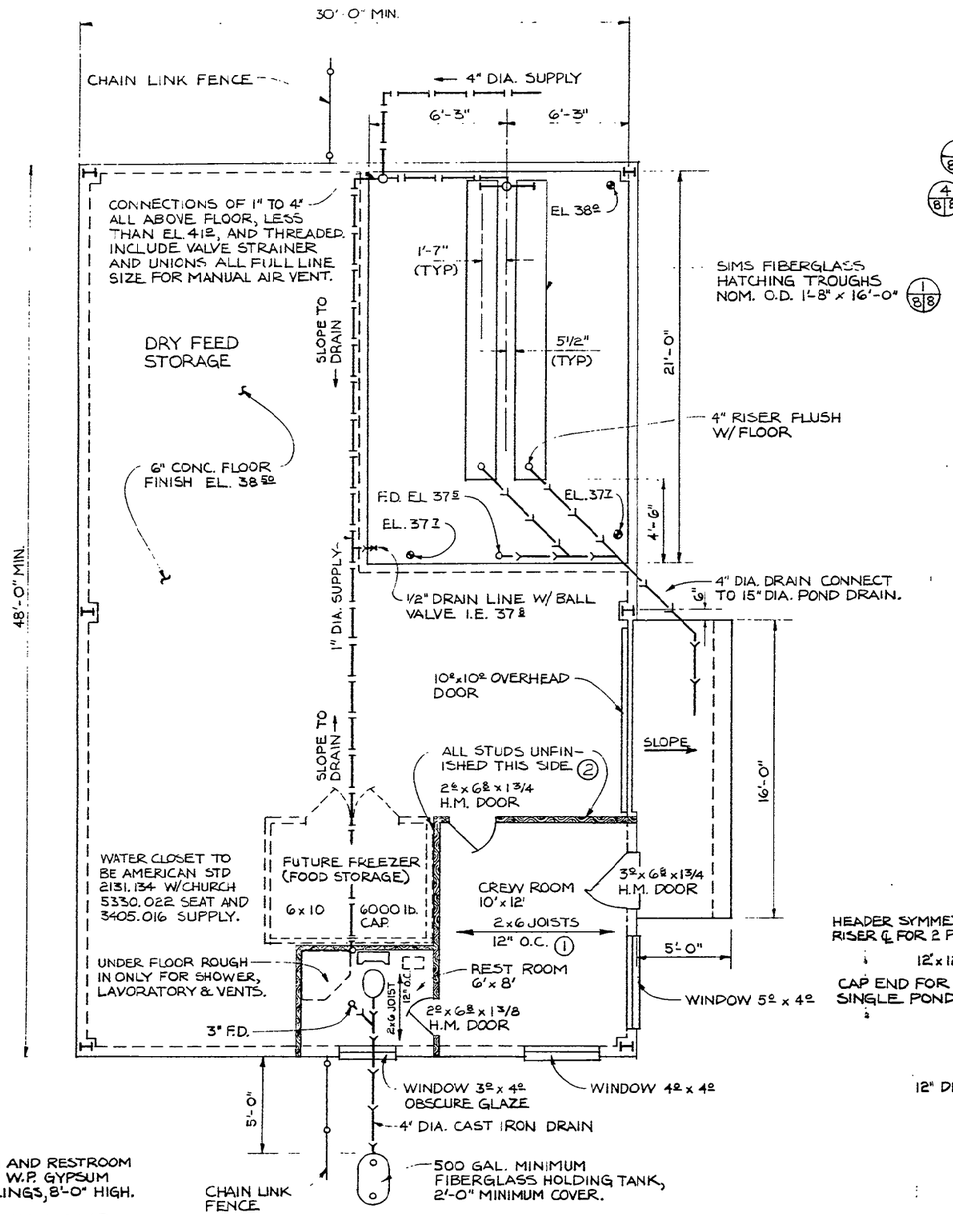

1. CREW ROOM AND RESTROOM TO HAVE 1/2" W.P. GYPSUM BOARD CEILINGS, 8'-0" HIGH.
2. 2x4 STUD WALL 1/2" W.P. GYPSUM BD. FINISH CREWROOM & RESTROOM SIDES ONLY.
3. NO PAINTING, TAPING, OR SPACKLING REQD ON GYPSUM BD. SURFACES.
4. STUDS, JOISTS, PLATES, & HEADERS STD AND BTR. GRADE.
5. WINDOWS ALUM. HORIZ. SLIDING DUAL GLAZE.
6. BLDG EAVE HEIGHT 12' MIN.

PLAN ~ HATCHERY BUILDING
1/4" = 1'-0"

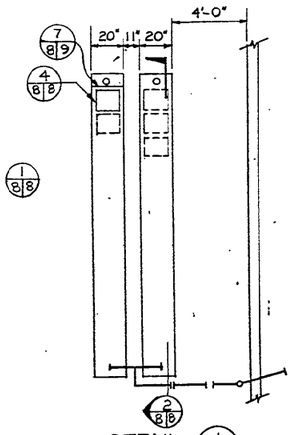

DETAIL 1/8 8
1/4" = 1'-0"

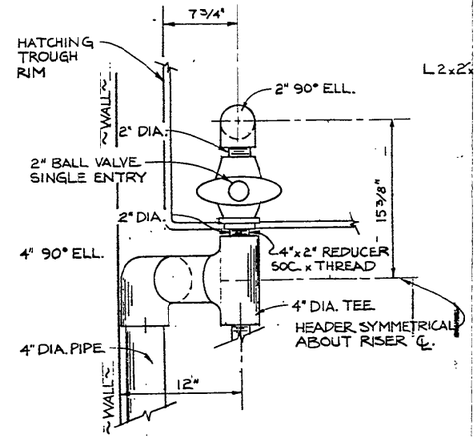

DETAIL 3/8 8
1½" = 1'-0"

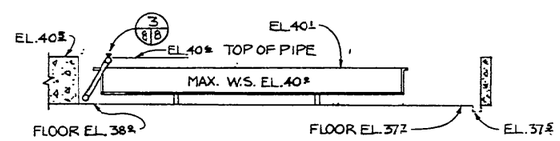

DETAIL 2/8 8
1/4" = 1'-0"

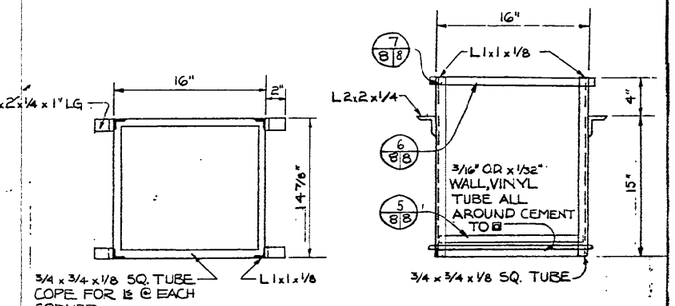

PLAN ELEVATION

DETAIL ~ EGG FRAME HOLDER 4/8 8
1½" = 1'-0" (15 REQ'D).

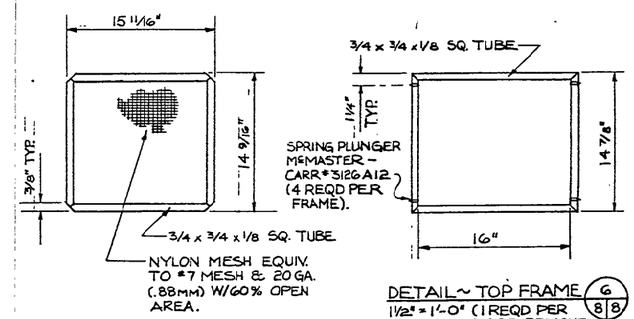

DETAIL ~ EGG FRAME 5/8 8
1½" = 1'-0" (15 PER HOLDER REQ'D)

DETAIL ~ TOP FRAME 6/8 8
1½" = 1'-0" (1 REQ'D PER HOLDER, REMOVEABLE)

MATERIAL	PER HOLDER
⊡ 3/4 x 3/4 x 1/8	90 LFT
L 1 x 1 x 1/8	6½ LFT
L 2 x 2 x ¼	½ LFT
SOFT NEOPRENE TUBE	5½ LFT
NYLON MESH	26 SF

NOTE: ALL SHAPES SHALL BE FIBERGLASS, RESIN WELD ALL

MATERIALS PER HOLDER

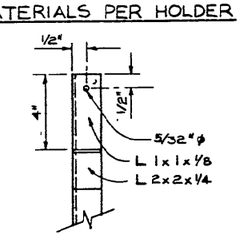

DETAIL 7/8 8
3" = 1'-0"

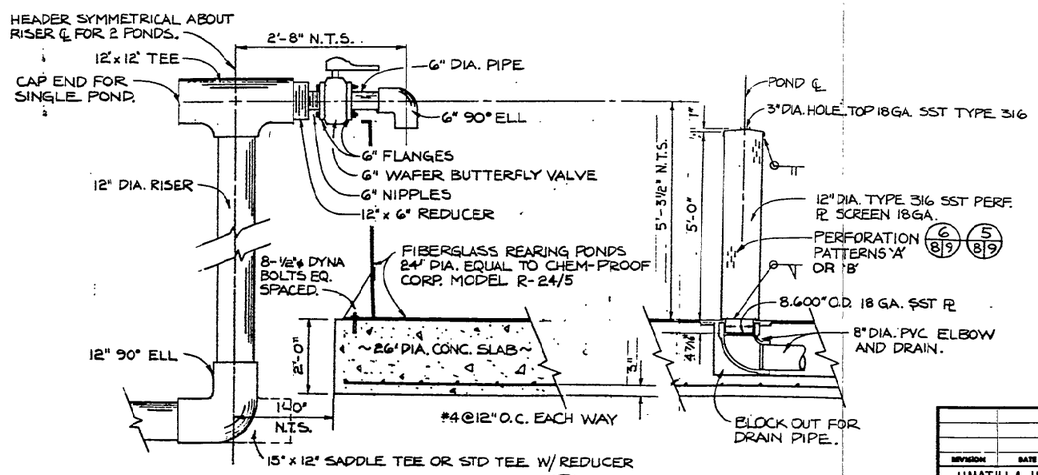

DETAIL ~ POND SUPPLY HEADER AND DRAIN 8/2 8
½" = 1'-0"

REVISION	DATE	DESCRIPTION	BY

UMATILLA INDIAN RESERVATION
BONIFER SPRINGS HATCHERY

HATCHERY BLDG. & DETAILS

DESIGNED	DRAWN	DATE	DWG. NO.
JLC	BW	JUN 80	IF-MISC-248-8.0

SHEET 8 OF 9

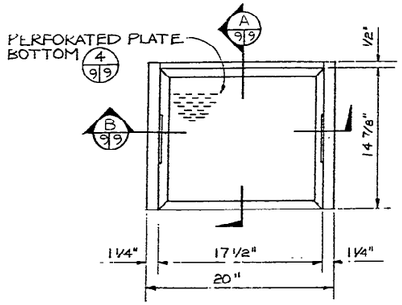

PLAN ~ HATCHING BASKET
1 1/2" = 1'-0" 10 REQD PER TROUGH

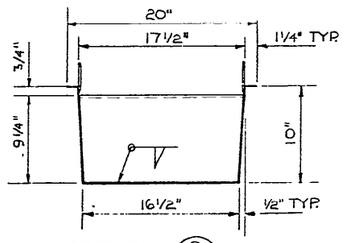

SECTION B 9/9
1 1/2" = 1'-0"

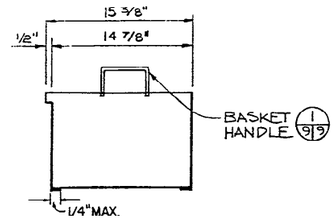

SECTION A 9/9
1 1/2" = 1'-0"

NOTES: 1 SIDES AND BOTTOM 18 GA. TYPE 316 SST.
2 CONTINUOUS WELD ALL JOINTS FINISH ALL WELDS SMOOTH.

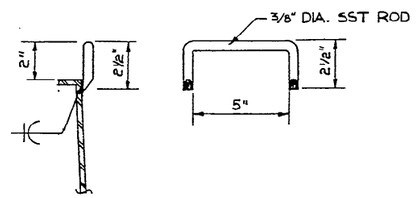

DETAIL ~ BASKET HANDLE 1 9/9
3" = 1'-0"

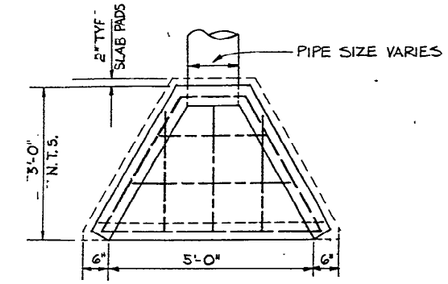

PLAN

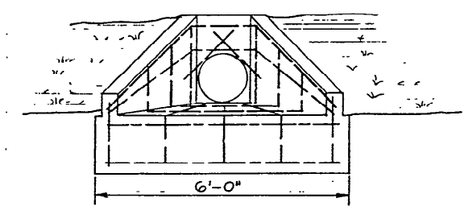

ELEVATION

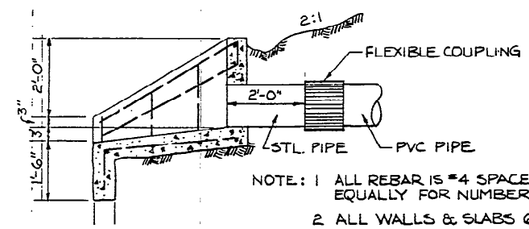

SECTION

NOTE: 1 ALL REBAR IS #4 SPACED EQUALLY FOR NUMBER SHOWN
2 ALL WALLS & SLABS 6" THICK.

OUTLET STRUCTURE ~ TYPICAL 2 2/9
1/2" = 1'-0"

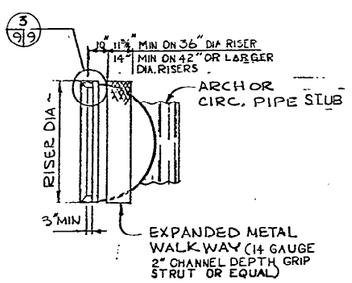

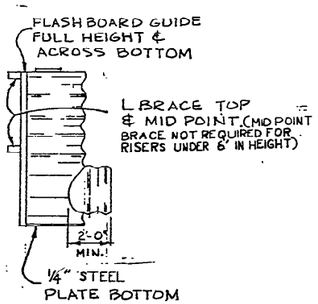

PLAN, ELEVATION ~ FLASHBOARD RISER
N.T.S.

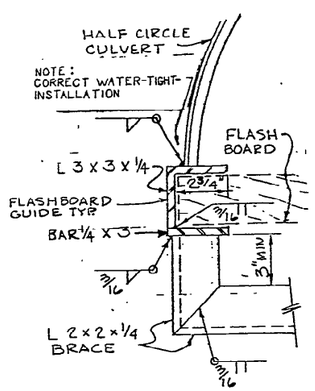

DETAIL 3 9/9
N.T.S.

NOTE: A FORMED 1/4" TH. CHANNEL MAY BE SUBSTITUTED FOR THE WELDED FLASHBOARD GUIDE SHOWN ABOVE.

FURNISH 3x6 T&G WESTERN RED CEDAR FLASHBOARDS FOR FULL HEIGHT OF GUIDE.

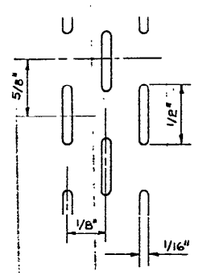

DETAIL ~ PERFORATION PLATE BOTTOM 4 9/9
N.T.S.

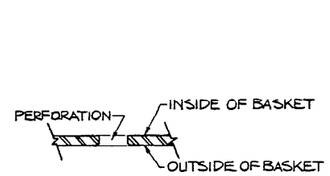

INSTALL SO THAT ROUNDED EDGES ARE TO THE OUTSIDE.

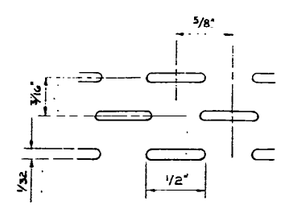

NOTE: SLOTS ARE TO BE HORIZONTAL ON THE DRAIN SCREEN.

DETAIL ~ PERFORATION PATTERN 'A' 5 8/9
N.T.S. FURNISH 1 ONLY PATTERN A 12" DIA 22 GA DRAIN SCREEN.

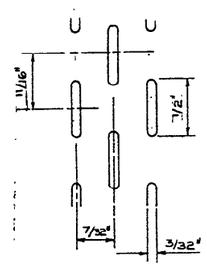

DETAIL ~ PERFORATION PATTERN 'B' 6 8/9
N.T.S. FURNISH 1 PER CIRCULAR POND 18 GA.

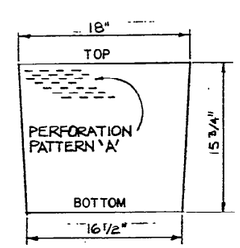

FURNISH 2 PER TROUGH, FAB. FROM 22 GA. TYPE 316 SST.

DETAIL ~ TROUGH SCREEN 7 8/9
1 1/2" = 1'-0"

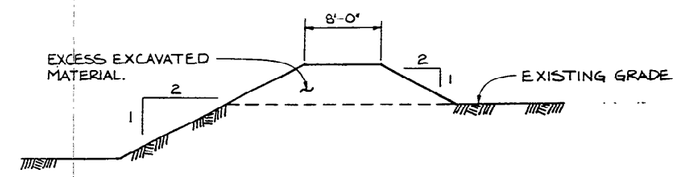

TYPICAL SETTLING POND PROFILE
N.T.S.

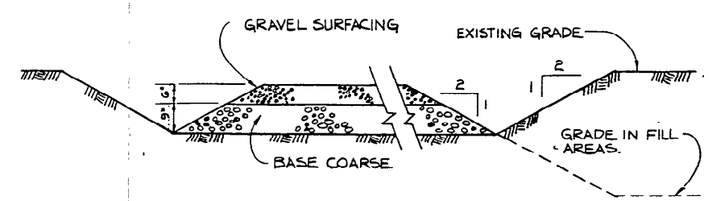

TYPICAL SURFACING PROFILE
N.T.S.

DIVISION	DATE	DESCRIPTION	BY

UMATILLA INDIAN RESERVATION
BONIFER SPRINGS HATCHERY

MISC. STRUCTURES & DETAILS

DESIGNED	DRAWN	DATE	DWG NO
JLC	BW	JUN 80	IF-MISC-248-90

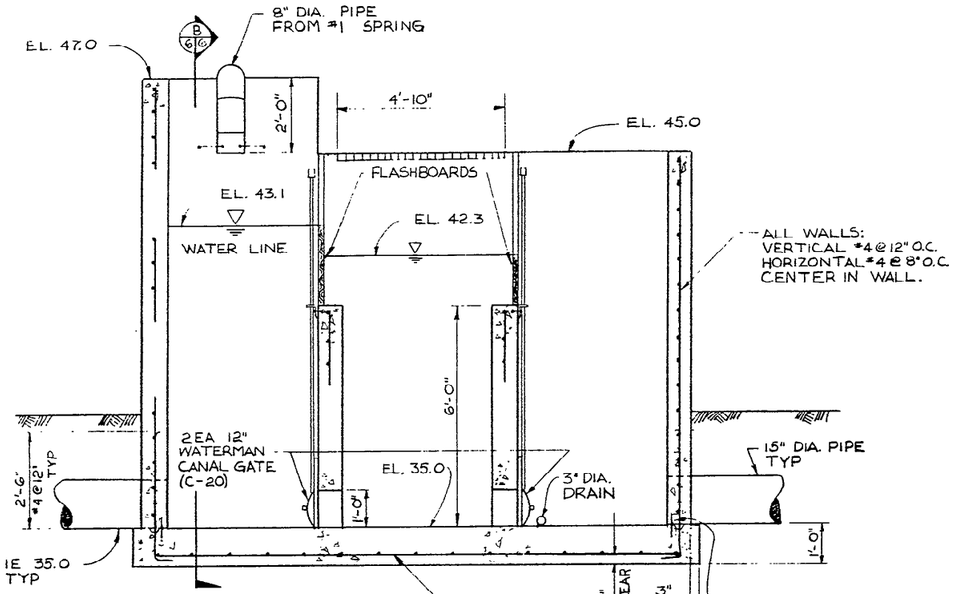

SECTION A 6/6
1/2" = 1'-0"

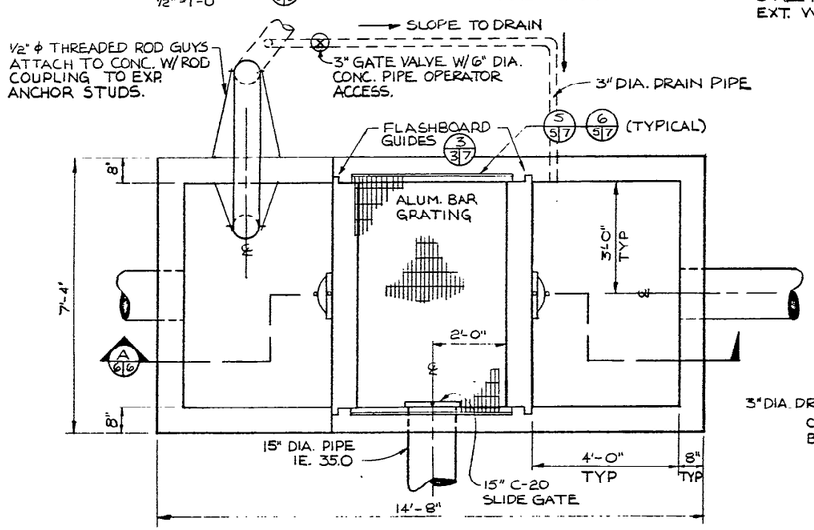

PLAN VIEW - WATER CONTROL STRUCTURE
1/2" = 1'-0"

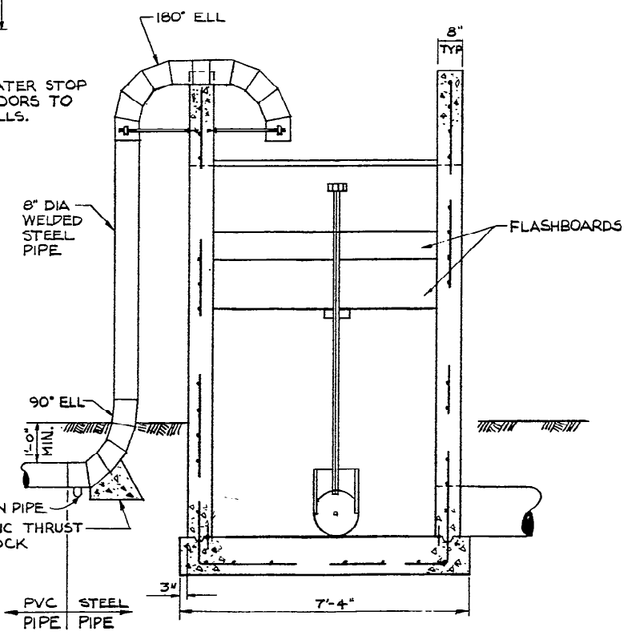

SECTION B 6/6
1/2" = 1'-0"

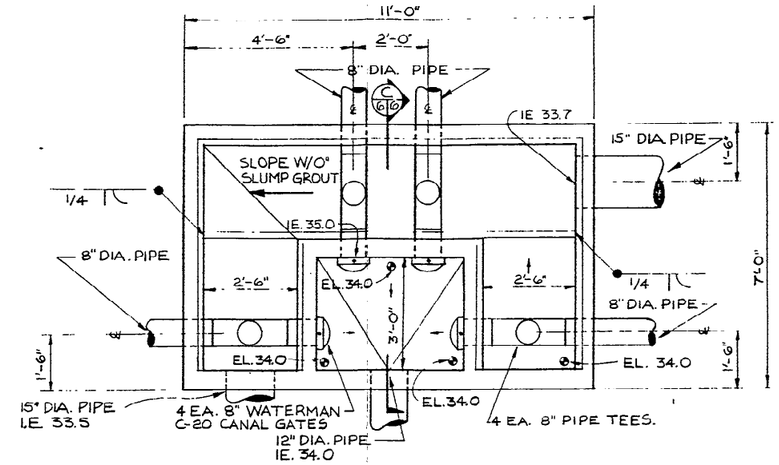

NOTE:
ALL WALLS SHALL BE 6" THICK.

PLAN VIEW - DRAIN CONTROL STRUCTURE
1/2" = 1'-0"

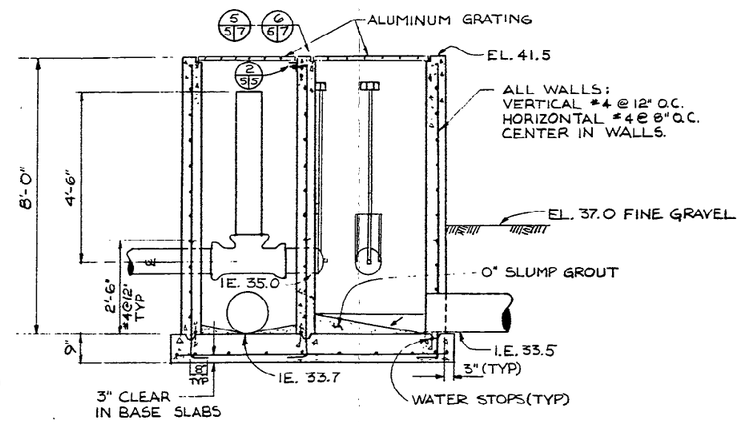

SECTION C 6/6
1/2" = 1'-0"

NOTE: 1 ALL BURIED PIPING SHALL HAVE A FLEXIBLE JOINT OR COUPLING WITHIN 2 FT. OF THE CONCRETE SURFACE.

2 ALL 15" DIA. PRESSURE PIPE SHALL BE STEEL.

REVISION	DATE	DESCRIPTION	BY

UMATILLA INDIAN RESERVATION
BONIFER SPRINGS HATCHERY

WATER CONTROL STRUCTURES

DESIGNED	DRAWN	DATE	DWG. NO.
JLC	BW	JAN 80	IF-MISC-248-6.0

SHEET 6 OF 9

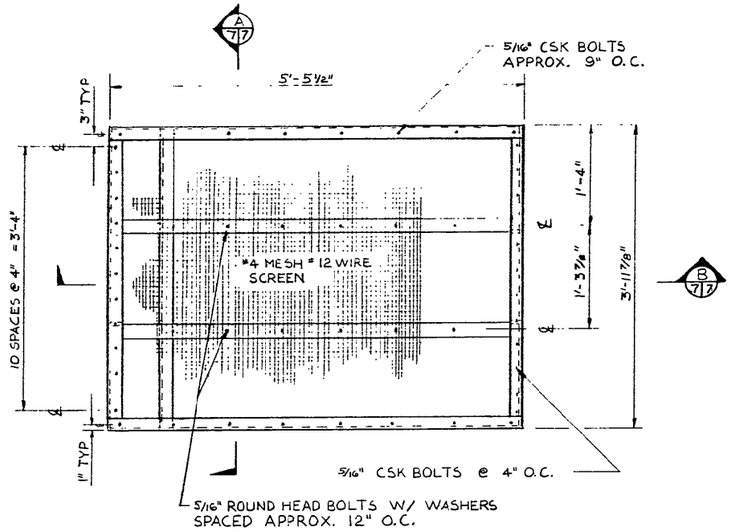

PLAN OF SCREEN
1" = 1'-0" (2 SCREENS REQUIRED EA. STRUCTURE)

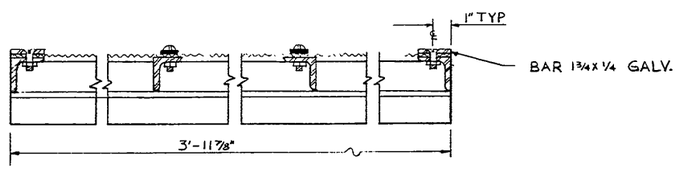

SECTION A 7/7
3" = 1'-0"

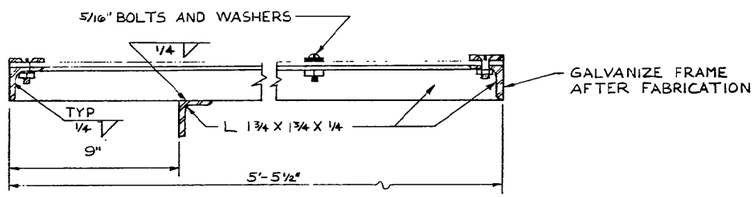

SECTION B 7/7
3" = 1'-0"

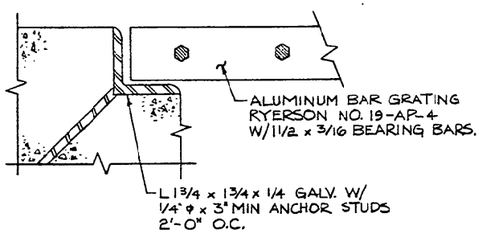

DETAIL 5 5/7
HALF SCALE

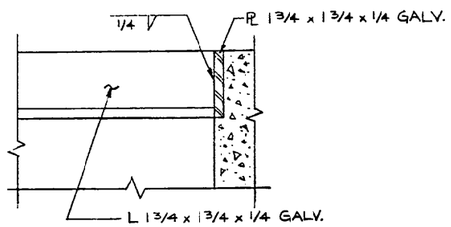

DETAIL 6 5/7
HALF SCALE

INTERLOCKING STEEL SHEETING DETAIL
(12 GAUGE)

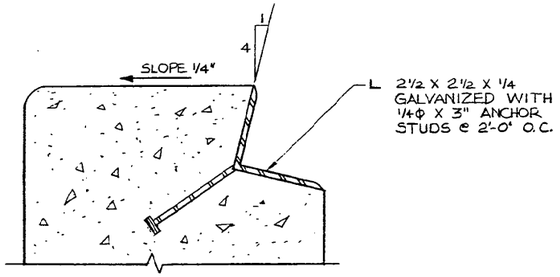

DETAIL 1 3/7
HALF SCALE

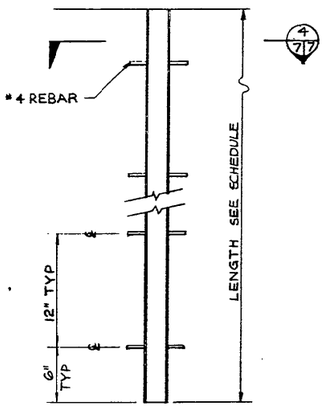

FLASHBOARD GUIDE 3 3/7
1½" = 1'-0"

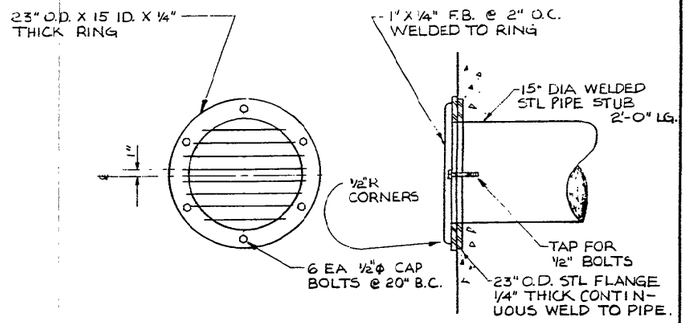

DETAIL 2 5/7
1" = 1'-0"

(TOP VIEW)

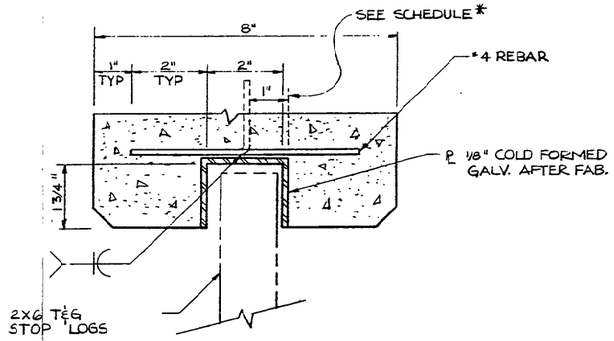

FLASHBOARD GUIDE DETAIL 4 7/7
HALF SCALE

FLASHBOARD GUIDE SCHEDULE

SH	STRUCTURE	LENGTH	NO. REQ'D
3	#3 SPRING INTAKE	5'-0"	1 PAIR
4	#1 SPRING INTAKE	5'-0"	1 PAIR
5	SPAWNING FACILITY	5'-6"	6 PAIR*
		4'-0"	2 PAIR
		2'-6"	1 PAIR
6	WATER CONTROL STRUCTURE	4'-0"	2 PAIR

* BEND ANCHOR BARS 90° TO MAINTAIN 1" CLEAR FOR FLUSH CHANNEL LEG INSTALLATION OF 1 PAIR ONLY.

REVISION	DATE	DESCRIPTION	BY

UMATILLA INDIAN RESERVATION
BONIFER SPRINGS HATCHERY — INTAKE MISC. METAL

DESIGNED	DRAWN	DATE	DWG NO
JLC	BW	DEC 79	IF-MISC-248-7.0

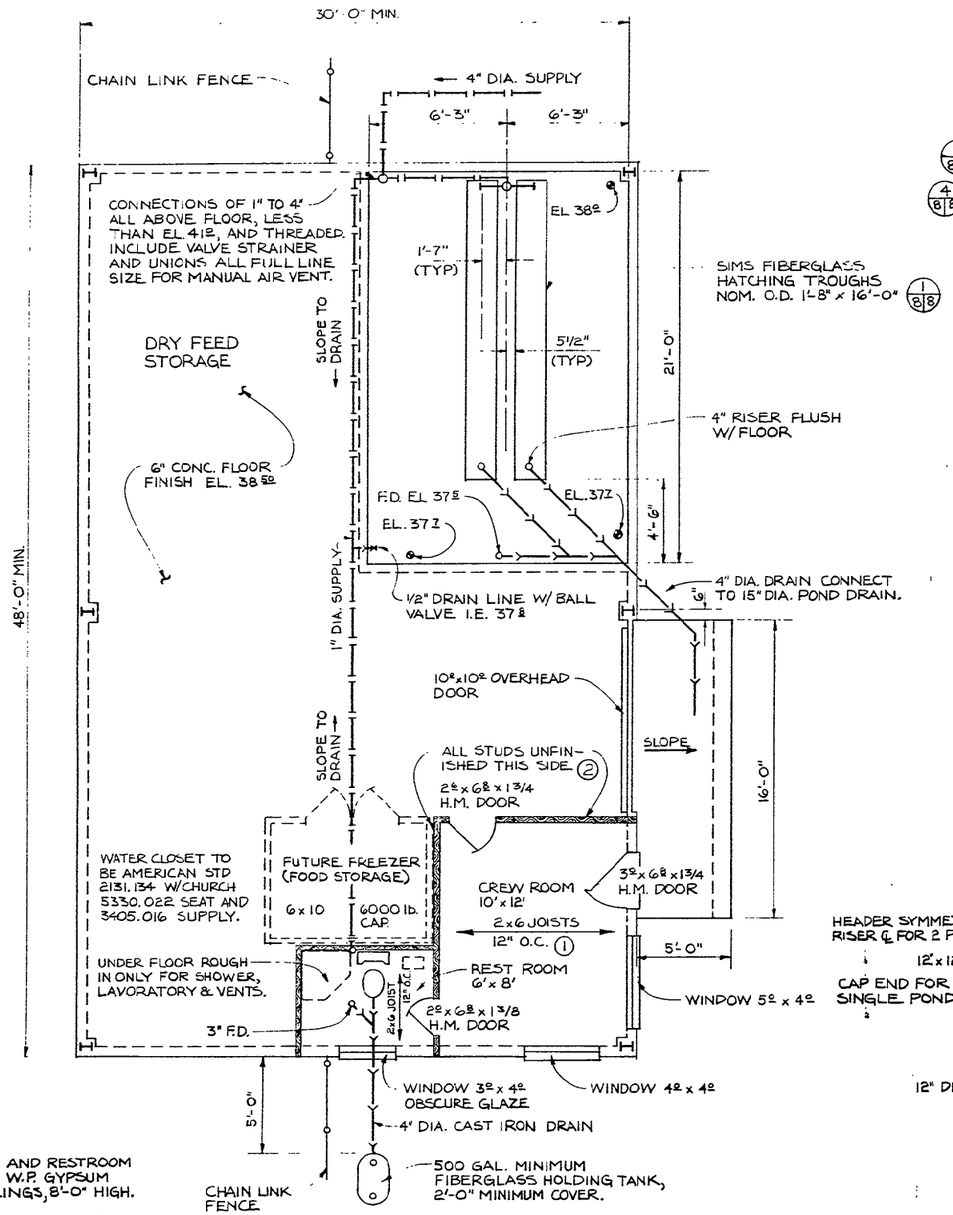

1. CREW ROOM AND RESTROOM TO HAVE 1/2" W.P. GYPSUM BOARD CEILINGS, 8'-0" HIGH.
2. 2x4 STUD WALL 1/2" W.P. GYPSUM BD. FINISH CREWROOM & RESTROOM SIDES ONLY.
3. NO PAINTING, TAPING, OR SPACKLING REQD ON GYPSUM BD. SURFACES.
4. STUDS, JOISTS, PLATES, & HEADERS STD AND BTR. GRADE.
5. WINDOWS ALUM. HORIZ. SLIDING DUAL GLAZE.
6. BLDG EAVE HEIGHT 12' MIN.

PLAN ~ HATCHERY BUILDING
1/4" = 1'-0"

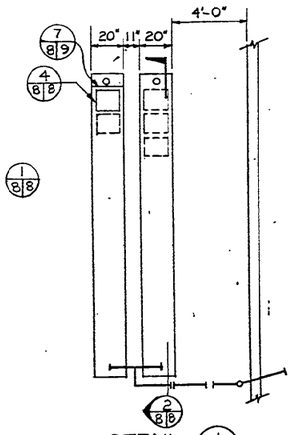

DETAIL 1/8 8
1/4" = 1'-0"

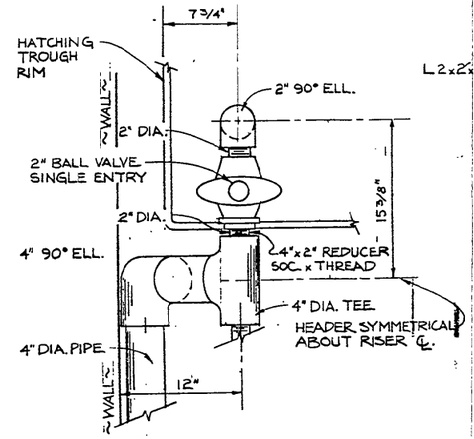

DETAIL 3/8 8
1½" = 1'-0"

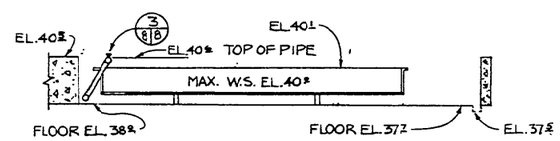

DETAIL 2/8 8
1/4" = 1'-0"

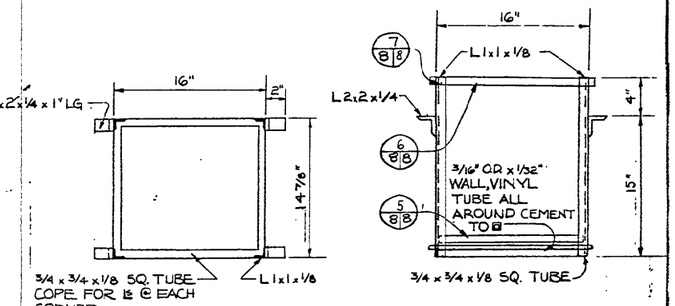

PLAN ELEVATION

DETAIL ~ EGG FRAME HOLDER 4/8 8
1½" = 1'-0" (15 REQ'D).

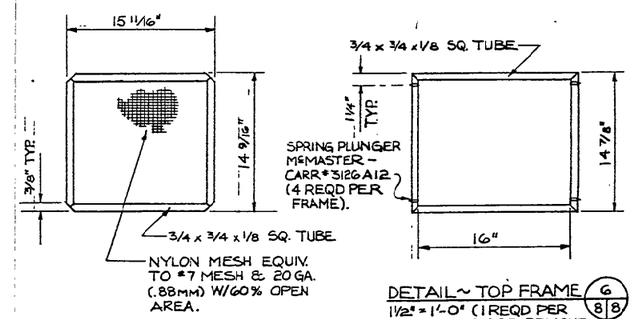

DETAIL ~ EGG FRAME 5/8 8
1½" = 1'-0" (15 PER HOLDER REQ'D)

DETAIL ~ TOP FRAME 6/8 8
1½" = 1'-0" (1 REQ'D PER HOLDER, REMOVEABLE)

MATERIAL	PER HOLDER
⊡ 3/4 x 3/4 x 1/8	90 LFT
L 1 x 1 x 1/8	6½ LFT
L 2 x 2 x ¼	½ LFT
SOFT NEOPRENE TUBE	5½ LFT
NYLON MESH	26 SF

NOTE: ALL SHAPES SHALL BE FIBERGLASS, RESIN WELD ALL

MATERIALS PER HOLDER

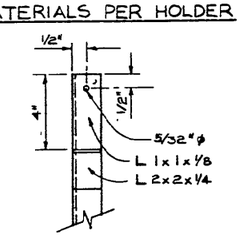

DETAIL 7/8 8
3" = 1'-0"

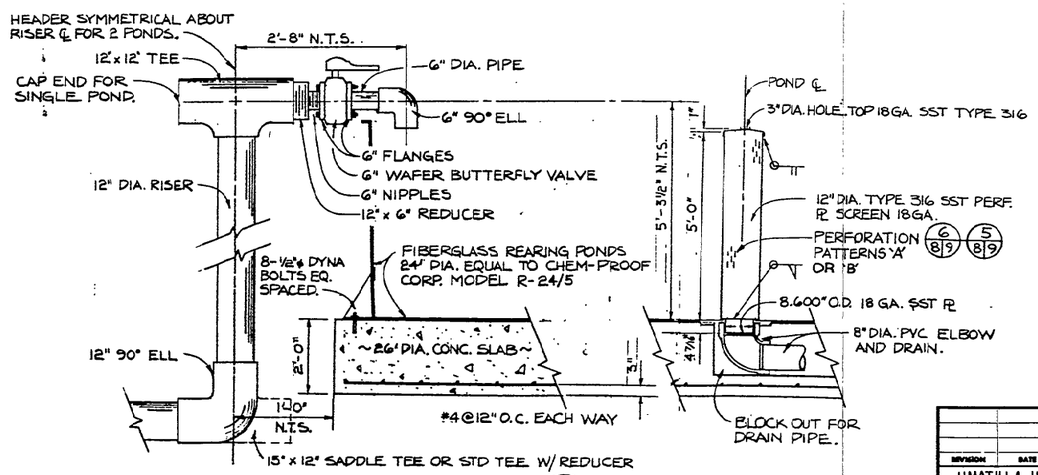

DETAIL ~ POND SUPPLY HEADER AND DRAIN 8/2 8
½" = 1'-0"

REVISION	DATE	DESCRIPTION	BY

UMATILLA INDIAN RESERVATION
BONIFER SPRINGS HATCHERY

HATCHERY BLDG. & DETAILS

DESIGNED	DRAWN	DATE	DWG. NO.
JLC	BW	JUN 80	IF-MISC-248-8.0

SHEET 8 OF 9

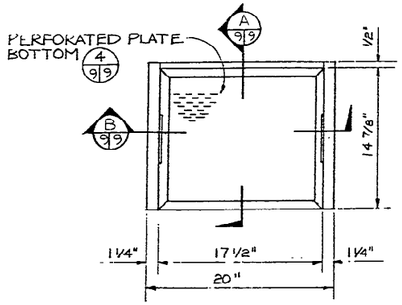

PLAN ~ HATCHING BASKET
1 1/2" = 1'-0" 10 REQD PER TROUGH

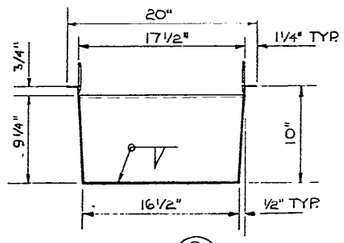

SECTION B 9/9
1 1/2" = 1'-0"

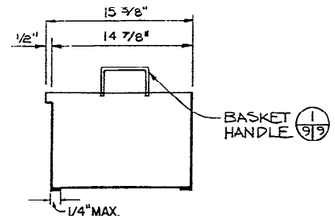

SECTION A 9/9
1 1/2" = 1'-0"

NOTES: 1 SIDES AND BOTTOM 18 GA. TYPE 316 SST.
2 CONTINUOUS WELD ALL JOINTS FINISH ALL WELDS SMOOTH.

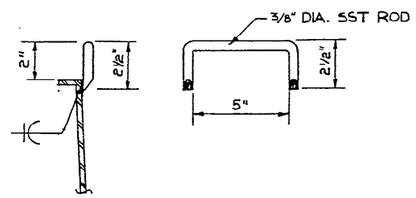

DETAIL ~ BASKET HANDLE 1 9/9
3" = 1'-0"

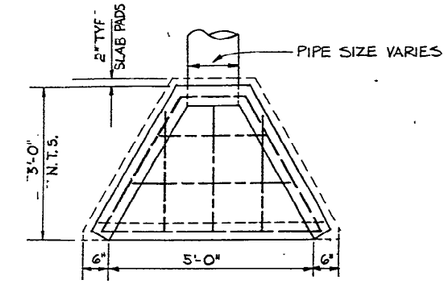

PLAN

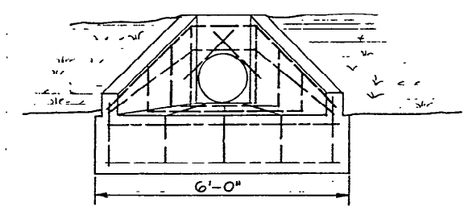

ELEVATION

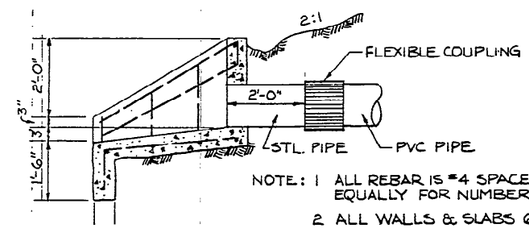

SECTION

NOTE: 1 ALL REBAR IS #4 SPACED EQUALLY FOR NUMBER SHOWN
2 ALL WALLS & SLABS 6" THICK.

OUTLET STRUCTURE ~ TYPICAL 2 2/9
1/2" = 1'-0"

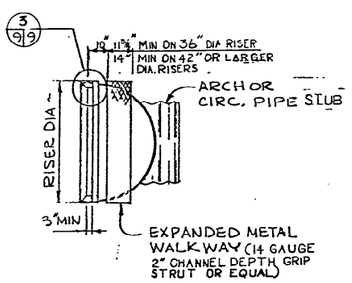

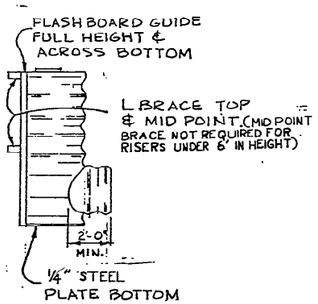

PLAN, ELEVATION ~ FLASHBOARD RISER
N.T.S.

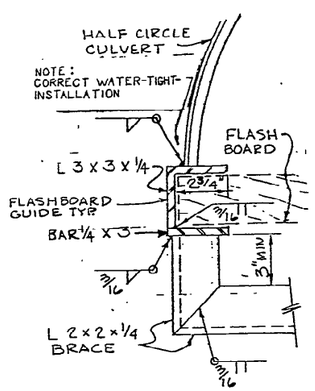

DETAIL 3 9/9
N.T.S.

NOTE: A FORMED 1/4" TH. CHANNEL MAY BE SUBSTITUTED FOR THE WELDED FLASHBOARD GUIDE SHOWN ABOVE.

FURNISH 3x6 T&G WESTERN RED CEDAR FLASHBOARDS FOR FULL HEIGHT OF GUIDE.

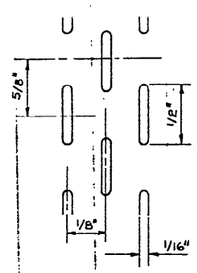

DETAIL ~ PERFORATION PLATE BOTTOM 4 9/9
N.T.S.

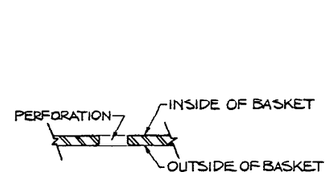

INSTALL SO THAT ROUNDED EDGES ARE TO THE OUTSIDE.

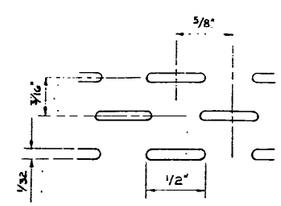

NOTE: SLOTS ARE TO BE HORIZONTAL ON THE DRAIN SCREEN.

DETAIL ~ PERFORATION PATTERN 'A' 5 8/9
N.T.S. FURNISH 1 ONLY PATTERN A 12" DIA 22 GA DRAIN SCREEN.

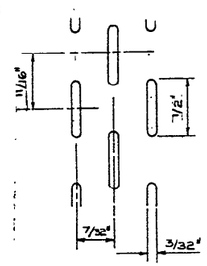

DETAIL ~ PERFORATION PATTERN 'B' 6 8/9
N.T.S. FURNISH 1 PER CIRCULAR POND 18 GA.

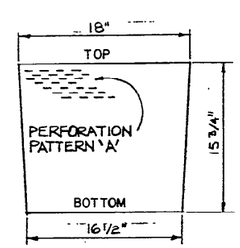

FURNISH 2 PER TROUGH, FAB. FROM 22 GA. TYPE 316 SST.

DETAIL ~ TROUGH SCREEN 7 8/9
1 1/2" = 1'-0"

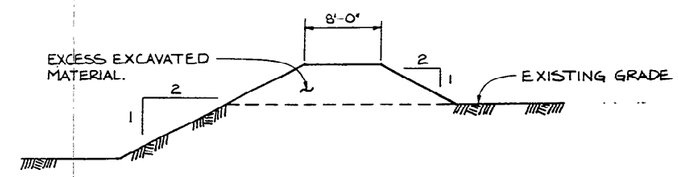

TYPICAL SETTLING POND PROFILE
N.T.S.

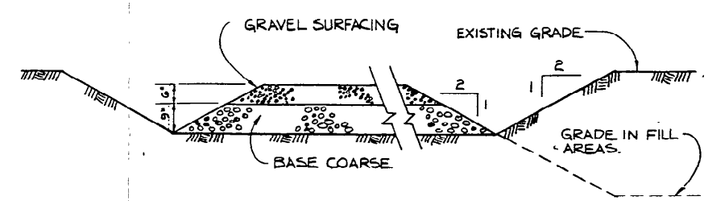

TYPICAL SURFACING PROFILE
N.T.S.

DIVISION	DATE	DESCRIPTION	BY

UMATILLA INDIAN RESERVATION
BONIFER SPRINGS HATCHERY

MISC. STRUCTURES & DETAILS

DESIGNED	DRAWN	DATE	DWG NO
JLC	BW	JUN 80	IF-MISC-248-90

TECHNICAL SPECIFICATIONS

DIVISION 1. GENERAL REQUIREMENTS

1A. SUMMARY OF WORK

lA.01 Description of Work

The work to be performed under this contract consists of furnishing all labor, equipment, materials and supplies required to construct a hatchery building, rearing ponds, spawning and holding structure, water control structure, water intake structure, effluent settling pond and supply and drain pipe.

lA.02 Location of Work

All work to be performed is at Minthorn Springs Hatchery on the Umatilla Indian Reservation near Pendleton, Oregon.

lA.03 Inquiries

Questions regarding the work should be directed to _____

_____

_____

lA.04 Applicable Codes

In instances where these specifications do not state exact materials or methods of construction, the applicable minimum requirements of the Uniform Building Code, 1979 edition shall govern.

lA.05 Engineering Services

The Engineer will furnish the Contractor with all necessary information relating to elevations and control points. From these elevations and control points, the Contractor shall furnish and place all additional stakes, marks and templates required for the performance and completion of the work. If any Government-established reference point or bench mark is disturbed or destroyed, the Contractor shall replace it to the original line and grade at his own expense.

1B. CONTRACT DOCUMENTS

lB.01 Drawings

The following drawings are hereby made a part of this invitation by reference:

Drawing No.	Title	Sheet Number
1F-MISC-249-1.0	SITE PLANS	1 of 8
1F-MISC-249-2.0	PLOT PLAN	2 of 8
1F-MISC-249-3.0	SPRING INTAKE	3 of 8
1F-MISC-249-4.0	HOLDING/SPAWNING FACILITY	4 of 8
1F-MISC-249-5.0	WATER CONTROL STRUCTURE	5 of 8
1F-MISC-249-6.0	MISCELLANEOUS METALS	6 of 8
1F-MISC-249-7.0	HATCHERY BLDG. & DETAILS	7 of 8
1F-MISC-249-8.0	MISC. STRUCTURES & DETAILS	8 of 8

lB.02 Coordination of Documents Governing the Work

a. The standard Government forms, specifications, associated plans, general and supplemental provisions, and supplemental agreements, made a part of the contract are essential parts thereof and the requirements in one are as binding as though contained in all. They are intended to be mutually supplementary to describe and provide for a complete work.

b. All discrepancies in the drawings shall be brought to the attention of the Engineer for resolution. Blueprints shall not be scaled to obtain missing or conflicting dimensions. The Contractor shall keep a check on dimensions and details as the work progresses and any errors or discrepancies discovered shall be promptly reported to the Engineer.

c. In cases of conflict between plans, specifications, special provisions, supplemental agreements and provisions of Standard Government Forms, the provisions of Standard Government Forms shall govern. In all cases of dispute in respect to such conflict or as to what part or parts of the specifications apply to any given parts of the work, decisions shall be made by the Contracting Officer.

lB.03 Copies of Drawings and Specifications

When reduced size drawings are furnished with the Invitation for Bids, 2 sets of full size prints will be furnished by the Contracting Officer at the request of Bidders.

b. Full size prints shall be used for construction. The Contractor will be furnished with a reasonable number of additional copies of the drawings and specifications he may require to carry on the work in a satisfactory manner.

1C. SUBMITTALS

lC.01 Equipment, Materials and Components

All equipment, materials and components furnished by the Contractor shall be stock models for which parts are readily available and shall be products which shall have performed satisfactorily in an installation independent of the manufacturer's facilities for a consecutive period of not less than 2 years as of the date of the bid opening.

b. Any item which the Contractor proposes to furnish as equal to item specified shall be submitted for approval following the instructions below.

lC.02 Submittal Procedure

a. All submittals shall be made utilizing the Government furnished Submittal Form Rl-67 which shall be used as the document for approving or disapproving the material. Written approval must be obtained from the Government before items are installed. Submittals not in accordance with the plans and specifications shall be accompanied by a written statement indicating in detail all parts which deviate from the plans and specifications.

b. All submittals shall be made to the Engineer by the Contractor only. Submittals received by the Engineer without the Contractor's signature

shall be returned to the Contractor without action.

c. Literature, shop drawings, etc., fully describing the items which the Contractor proposes to install shall be submitted in 5 copies. Material or finish samples shall be submitted in 3 sets. Items submitted shall be plainly marked to indicate which options, models, etc. are proposed.

lC.03 Required Submittals

a. Construction Schedule. The Contractor shall furnish the Engineer his proposed work schedule within 15 days after award of contract. He shall also advise the Engineer of revisions of the schedule as modifications may become necessary, or as may be required after commencement of work. Such outlines and revisions shall be in sufficient detail to enable the Engineer to judge as to the adequacy of the Contractor's operations and to anticipate such conditions as may tend to impair or retard the progress and completion of the work.

b. The Contractor shall send submittals for the following items to the Regional Engineer for approval prior to installation:

Concrete Material	Misc. Metals
Doors	Piping Layout and Materials
Embedded Metals Items	Rearing Ponds
Fencing	Rebar Schedule & Placement Drawing
Grating	Hardware
Incubators	Slide Gates
Metal Building	Valves
Windows	Hatching Troughs

1 D. CONSTRUCTION SUPPORT

lD.01 Utility Services and Construction Support Facilities

The Contractor shall furnish all facilities and utilities needed for his operations under this contract, including all temporary heat, light, power, water, telephone, sanitary facilities and job offices and shops.

lD.02 Access to Site

Access to the work from existing roads shall be provided by the Contractor at his own expense. The Government assumes no responsibility for the condition or maintenance of any road or structure thereon that may be used by the Contractor in performing the work under these specifications or in traveling to and from the site of the work. No payment will be made to the Contractor by the Government for any work done in improving, repairing, or maintaining any road or structure thereon for use in the performance of the work under these specifications. Roads subject to interference by the work shall be kept open.

lD.03 Protection of Property

The Contractor shall not enter upon private property for any purpose without first obtaining permission from the owner or his duly authorized representative, shall be responsible for the preservation of all public and private property along and adjacent to work contemplated under the contract, and shall use every precaution necessary to prevent damage or

injury thereto. He shall -exercise due care in preventing, and shall be responsible for damages to structures of all kinds, whether owned by the Government or privately, and shall protect from disturbance or damage all land monuments until they have been properly referenced by the Engineer.

lD.04 Rights of Way

The sites necessary for the installation of machinery, camp grounds, and works to be constructed, and for Government furnished borrow pits, required channels, ditches and spoil banks, will be provided by the Government. Days under which work is prevented by failure to furnish necessary right of way under the initial sentence of this paragraph will not be counted against the Contractor as delay in completion of the contract, and the time stipulated for completion of work will be increased by the number of calendar days of any delay so caused. In event of failure to obtain right of way for all or any portion of the work by the time construction has progressed thereto, the Contracting Officer shall have the right to omit such work or portion of such work.

lD.05 Operations and Storage Areas

All operations of the Contractor (including storage of materials) upon Government premises shall be confined to areas authorized or approved by the Contracting Officer. Government premises adjacent to the construction will be made available for use by the Contractor without cost whenever such use will not interfere with other Government uses or purposes. The Contractor shall be liable for any and all damages caused by him to such Government premises and shall at all times protect and preserve all materials, supplies, and equipment of every description and all work performed.

lD.06 Protection of Environment

a. All contract operations shall be conducted within compliance of all federal, state and local environmental laws and regulations. This condition applies to, but is not limited to, laws and regulations governing noise levels and air and water quality standards.

b. If the Contractor fails or refuses to promptly comply with the requirements of subparagraph above, the Contracting Officer or his authorized representative, shall notify the Contractor of any noncompliance and indicate to the Contractor the action to be taken. The Contractor shall, after receipt of such notice, immediately correct the conditions to which attention has been directed. Such notice, either oral or written, when served on the Contractor or his representative(s) at the site of the work, shall be deemed sufficient.

c. In the event the Contractor fails or refuses to promptly comply with the compliance directive issued under subparagraph above, the Contracting Officer may issue an order to suspend all or any part of the work.

d. When satisfactory corrective action is taken, an order to resume work will be issued. The Contractor shall not be entitled to any extension of time, nor to any claim for damage or to excess costs by reason of either the directive or the suspension order.

lD.07 Additional Safety Requirement

In addition to the Safety and Health requirements of the General Provisions, Clause 37, roll-over protection and seat belts required by 29 CFR 1926 shall be extended to include equipment regardless of year of manufacture.

1E. CONTRACT ADMINISTRATION

lE.01 Authority of the Engineer

a. The Engineer, as the Contracting Officer's representative, shall decide any and all questions which may arise as to the quality and acceptability of materials furnished and work performed, the manner of performance and the rate of progress, interpretation of the plans and specifications, and acceptable fulfillment of the terms of the contract.

b. The Engineer may suspend the work by written order only for such period or periods as are necessary because of extended unsuitable weather or for such other site conditions as may be unfavorable for the prosecution of the work. Upon suspension the work shall be put in satisfactory condition and properly protected, as directed by the Engineer. The work shall not be resumed until permitted by written order of the Engineer. Extensions of time will be allowed as provided in Clause 5(d) of the General Provisions of Standard Form 23A or 2(b) of Standard Form 19, whichever is applicable, however, no additional compensation or adjustment in contract price will be allowed by reason of this work suspension. This extension of time shall not release the Contractor and his sureties from their general obligations under the contract and performance bond.

lE.02 Authority of Inspectors

a. Inspectors employed by the Government will assist the Engineer in making all necessary inspections and measurements and will enforce a strict compliance with the terms of the contract and the orders of the Engineer. No decisions or instructions of an Inspector will at any time relieve the Contractor from the responsibility ofcomplying fully with all the requirements of the contract. In cases of difference arising between an Inspector and the Contractor or his agent, appeal shall be taken to the Engineer.

b. Inspectors are not authorized to waive or alter in any respect any of the terms or requirements of the contract, to make additional requirements, to grant extensions of time or delays, or to waive forfeitures. The Contractor shall not be entitled to payment for any work improperly performed with or without an Inspector's approval.

lE.03 Performance of Work by Contractor

The Contractor's procedure and methods of construction may, in general, be of his own choosing, provided they follow best general practice and are calculated to secure results which will satisfy the requirements of these specifications.

b. The Contractor shall furnish the Engineer all reasonable facilities for obtaining such information as he may desire respecting the character of the materials and the progress of the work. The Contractor shall furnish information to include the number of men employed, their pay, the time they worked, and other elements of cost at the request of the Engineer.

lE.04 Payments

Payments for work performed by the Contractor shall be made in accordance with the provisions of Clause 7 of the General Provisions of Standard Form 23A or Clause 6 of Standard Form 19, whichever is applicable.

lE.05 Payments for Change Orders

a. Payments for work performed under any change order or extra work order issued pursuant to the provisions of Section 3 of the General Provisions, will be made on the basis of unit prices stated in the contract where applicable. Whenever the schedule of unit prices in the contract does not apply to any items authorized and directed in a change order such items of work shall be paid for at a price agreed upon in writing between the parties to the contract before such work is' done, or, in the event of failure of the parties to agree, on the basis of force account in the following manner:

(1) For all labor, and foremen in direct charge of the specified operation, the Contractor shall receive the current local rate of wage and the cost of the employer's liability insurance, social security taxes, etc., to be agreed upon in writing before starting the work, to which shall be added an amount equal to 15 percent of the sum thereof. No allowance shall be made for general superintendence and the use of small tools and ordinary equipment.

(2) For all materials used, the Contractor shall receive the actual cost of such materials, including transportation charges, to which cost shall be added a sum equal to 15 percent thereof.

(3) For any machine-power tools or special equipment, including pertinent fuel and lubricants, which it may be deemed necessary or desirable to use, the Contracting Officer shall allow the Contractor a reasonable rental price, to be agreed upon in writing before any work is begun, for the time that such tools or equipment are in use on the work, and to which sum no percentage shall be added.

b. The compensation as herein provided shall be received by the Contractor as payment for work done on a force-account basis. The Contractor's representative and the Inspector shall compare records of work done on a force-account basis at the end of each day. Copies of these reports shall be made upon suitable forms provided for this purpose, and signed by both the Inspector and the Contractor's representative, one copy being forwarded to the Engineer and one to the Contractor. All claims for work done on a force-account basis shall be submitted to the Engineer by the Contractor upon certified statements, and such statements shall be filed not later than the tenth day of the month following that in which the work was actually performed.

1F. CONTRACT COMPLETION

lF.01 Cleaning Up

a. Rubbish shall not be allowed to accumulate on the site and the Contractor shall collect and remove, from time to time, such rubbish and debris incident to the execution of the contract as, in the opinion of the Engineer may be undesirable or disfiguring on the premises.

b. Upon completion of the work, the Contractor shall remove from the vicinity thereof all plant, buildings, unused materials, concrete forms, rubbish, and other materials belonging to him or used under his direction during construction, sweep the floors broom clean, clean all window lights, etc., as may be required by the Engineer, and in case of his failure to do so, the same may be removed by the Government at the expense of the Contractor and the Contractor and his surety shall be liable therefor.

lF.02 Final Inspection

The Contractor shall notify the Engineer at least 10 days prior to the anticipated date of completion of all work specified in the contract. Upon completion of the work, the Engineer shall proceed with final inspection and shall complete such inspection as promptly as practicable. The time required for such inspection and the making of any corrections as a result thereof shall be included in the contract performance time.

lF.03 Acceptance and Final Payment

Final acceptance is the allowance of final estimates by the Contracting Officer. The Engineer shall certify to the Contracting Officer that the contract is complete and include the amount of the final payment due the Contractor. All progress or partial payments made prior to the final payment are subject to correction in the final estimate and payment.

lF.04 Release of Claims

After completion of work, and prior to final payment, the Contractor shall furnish to the Contracting Officer a release of claims Form DI-137, properly executed by the Contractor, against the United States arising out of the contract, other than claims specifically excepted from the operation of the release.

lF.05 Termination of Responsibility of Contractor

The contract shall be considered as completed after all work contemplated therein has been accepted and final estimates therefore have been allowed and paid, and the Contractor shall be considered as released from all further obligations and responsibility thereunder except as to the conditions and requirements set forth in the performance bond and payment bond.

DIVISION 2. SITE WORK

2A. DEMOLITION AND REMOVAL OF EXISTING STRUCTURES

2A.01 General

Existing structures to be demolished and/or removed include a timber entrance road bridge, 200 lin. ft. of barbed wire fence and a concrete weir in Minthorn Springs Creek. All structures not designated to be removed shall remain and be protected by the Contractor. Any damage to the structures to remain shall be repaired by the Contractor at no additional cost to the Government. All materials resulting from demolition shall become the property of the Contractor and shall be removed from the site. Broken concrete may be used as riprap as specified in Division 2G or may be used as fill material as specified in Division 2D.01.

2A.02 Limits of Removal

2A.02a. BELOW ROADS AND PARKING AREAS

All concrete and timber to be removed which is not more than 2 ft. below subgrade elevation shall be removed. Subgrade elevation is defined as the bottom of the gravel surfacing.

2A.02b. BELOW LANDSCAPED AND UNSURFACED AREAS

All concrete and timber to be removed which is not more than 12 in. below finished grade shall be removed.

2A.02c. BELOW NEW STRUCTURES AND PIPELINES

All concrete and 'timber to be removed which is not more than 6 in. below the bottom surface of the structure or pipe shall be removed.

2A.02d. BESIDE NEW STRUCTURES AND PIPELINES

All concrete and timber to be removed which is within 2 ft. of the structure or pipe shall be removed.

2B. CLEARING AND GRUBBING

2B.01 General

All trees with trunk diameter 6 in. or more in diameter shall be saved unless specifically designated for removal. All debris resulting from clearing and grubbing shall be burned or disposed of off the site, Burying of the debris will not be allowed. All trees and shrubs outside the limits of clearing and grubbing designated below shall be protected from damaged by the Contractor.

2B.02 Limits of Clearing and Grubbing

2B.02a. SURFACED AREAS

All areas to be surfaced and within 2 ft. of the surface edge shall be

cleared and grubbed of all trees, shrubs, stumps, roots and other perishable matter except sound undisturbed stumps and roots may remain as permitted in Division 2B.02b.

2B.02b. FILLED AREAS

All areas to receive more than 6 in. of fill shall be cleared and grubbed of all trees, shrubs, stumps, roots and other perishable matter except sound undisturbed stumps and roots that will be more than 3 ft. below the slope of embankments or subgrade may remain. Subgrade is defined as the bottom of the gravel base or concrete.

2B.02c. BUILDINGS AND STRUCTURES

All areas within 5 ft. of new buildings and structures shall be cleared and grubbed of all trees, shrubs, stumps, roots and other perishable matter except trees and shrubs designated to remain. Sound undisturbed stumps and roots may remain as permitted in Division 2B.02b.

2B.02d. PIPELINES

All areas within 2 ft. on either side of the outside of pipelines shall be cleared and grubbed of all trees, shrubs, stumps, roots and other perishable matter. Where pipelines are to be placed in filled areas,, sound undisturbed stumps may remain as permitted in Division 2B.02b provided they are cut off 6 inches or more below the bottom of the pipe.

2C. EXCAVATION

2c.01 General

The Contractor shall perform all excavation, grading and compacting necessary for and properly incidental to the completion of the work.

The Contractor shall be responsible for dewatering work areas and no extra payment will be made for water encountered in any excavation or other work area. Water removed from the excavations and other work areas shall not be allowed to flow into the creek if it will increase the turbidity in the creek.

Material obtained from excavation which meets the fill and backfill specifications shall be used in the required fills and backfills. Excess and/or unsuitable material shall be removed from the site or disposed of in the areas designated by the Government.

x.02 Structural Excavation

Structural excavations include excavations required for footings, slabs and manholes.

The bottom of excavations shall be within plus or minus 0.1 ft. of the elevations shown on the drawings.

The bottom of all strucural excavations shall be cleaned to remove all rocks over 1 in. diameter and loosened soil. Cleaning shall be accomplished

immediately prior to placing gravel base or concrete. Gravel base where required shall be as specified for pipe bedding in Division 2D.02a.

Excavations carried below the required depths shall be refilled with gravel base material, placed and compacted all as specified for structural fill and backfill in Division 20.03.

2C.03 Trench Excavation

This section is applicable to excavations required for the placement of all underground pipes, conduits and cables.

The trench shall be excavated to permit placement of the pipe, conduit, or cable to the alignment and grade shown on the drawings or specified. Excavation depth shall include an allowance for the required bedding and the trench bottom shall be cleaned of all loosened soil and rocks. The shape and dimension of the trench shall be as shown. Where not shown the shape and dimension of the trench shall afford at least 1 ft. on each side of pipes 3 in. to and including pipes 36 in. diameter, and 2 ft. total width of pipes smaller than 3 in., for doing all necessary work around and beneath the pipe, for inspection after laying and for thoroughly tamping the backfill without injury to the pipe or coating. If, without written authorization, the pipe trench is excavated below the required depth, it shall be backfilled at the Contractor's expense with bedding material specified in Division 2D.O2a.

The Contractor shall provide shoring, signs, barricades, etc., in accordance with OSHA (Occupational Safety and Health Standards), and shall maintain traffic where trenches cross roads.

2C.04 Other Excavations

Other excavations include all excavations required to construct roads. parking areas, ditches, etc. The bottom of these excavations shall be within plus 0.1 ft. of the elevations shown with an allowance for the required surfacing material.

2D. FILLING AND BACKFILLING

2D.01 General

References in these specifications to percentages of the maximum density are percentages of the maximum density as defined and determined by AASHTO T180, Method D. All materials requiring compaction to minimum densities expressed as a percentage of the relative maximum density shall be tested in accordance with AASHTO T180, Method D, Tests shall be run by an independent testing laboratory selected by the Contractor and approved by the Engineer. The Contractor shall pay all costs for testing.

All fill and backfill shall be placed only in the presence of the Inspector. Fill and backfill material shall be earth or gravelly material free of refuse, vegetable matter or roots over 1 in. in diameter and rocks over 6 in. in diameter except larger rocks will be permitted in the deep

fills when placed as specified below for broken concrete. All temporary planking, timber, etc., shall be removed as the backfill is placed. All fill and backfill (except Pipeline Backfill and Structural Fill and Backfill, found in Division 2D.02 and 2D.03, respectively) shall be placed in layers not exceeding 12 in. loose depth. Before adding succeeding layers, each layer shall be compacted to a minimum density of 85% relative maximum density. Broken concrete shall have all rebars cut reasonably flush and shall be placed in the fill areas in a manner that will allow compaction of soil, around the concrete pieces. No broken concrete shall be placed within 12 in. of subgrade.

2D.02 Pipeline Backfill

2D.02a. GENERAL

The word pipeline shall include all underground pipes, conduits and cables.

Trenches shall not be backfilled until the Inspector has determined that installation and testing requirements have been met. Backfill shall be brought up evenly on both sides of the pipe to avoid lateral displacement of the pipe or damage to the joints. Insofar as permitted by Division 15D. TESTING, pipelines shall be backfilled on the same day the pipe is laid to prevent displacement.

All pipelines shall be bedded. Minimum thickness of the bedding layer under the pipelines shall be 6 in. Bedding material shall be furnished by the Contractor and shall meet the following gradation.

Screen or Sieve Size	Percent Passing by Weight
l-1/2 in.	100
l/2 in.	Not less than 40
No. 100	Not more than 10

In addition to meeting the above gradation, all bedding for plastic pipe, asbestos cement pipe (except perforated asbestos cement pipe), direct burial cable and coated and wrapped steel pipe shall pass a l/4 in. sieve.

The Contractor may use excavated material for bedding if it meets the aforementioned gradation or he may at his option process excavated material to meet the required gradation.

Backfill shall be placed only in the presence of the Inspector. Compaction of pipeline backfill to 1 ft. over the top of the pipes shall be with hand-operated compaction equipment.

Material as specified for bedding shall be placed along both sides of the pipe in layers not exceeding 6 in. loose depth. Before placing succeeding layers, each layer shall be compacted to the minimum density of 85% relative maximum density. Backfilling and compacting in 6 in. layers shall continue until 1 ft. of cover has been placed over the top of the pipe. Remaining backfill may be placed in accordance with Division 2D.01. Backfilling with bedding material will be required to

1 ft. over the top of coated and wrapped steel pipes, plastic pipes, asbestos cement pipes and direct burial cables and to the springline for all other pipes. Backfill material from the springline to 1 ft. over the top of pipes other than plastic, coated and wrapped steel pipe, asbestos cement pipe and direct burial cable shall be granular material free of rocks over 2 in. in diameter.

2D.02b. PIPELINES UNDER CONCRETE SLABS

Material as specified for bedding in Division 2D.02a shall be placed along both sides of the pipe in layers not exceeding 6 in. Before placing succeeding layers, each layer shall be compacted to a minimum density of 90% relative maximum density. Backfilling with bedding material shall be extended to the top of the pipeline excavation.

2D.02c. PIPELINES PASSING BELOW OTHER PIPELINES

Pipelines passing below other pipelines shall be backfilled as specified for "Pipelines Under Concrete Slabs". Any backfill below a slope of 2:1 (horizontal to vertical), drawn from the top of the upper pipe, shall be considered as being below the upper pipe.

2D.02d. PIPELINES UNDER BLACKTOPPED AND GRAVEL SURFACED AREAS

Material as specified for bedding and backfill shall be placed and compacted as specified Division 2D.02a except that all backfill shall be placed and compacted to 90% relative maximum density. Placing and compacting shall be done in 6 in. layers.

2D.03 Structural Fill and Backfill

All fill and backfill within 3 ft. of all structures and buildings shall be defined as structural fill or backfill. Structural fill and backfill material shall be as specified in Division 2D.01. Structural fill and backfill shall be placed in layers not exceeding 6 in. loose depth. Before adding succeeding layers, each layer shall be compacted to the minimum density of 95% relative maximum density. Compaction of structural fill and backfill shall be with hand-operated compaction equipment.

Where backfill is to be placed against both sides of concrete walls, the backfill shall be brought up evenly on both sides of the wall.

No backfill shall be placed against one side of concrete walls until the concrete has developed sufficient strength to resist the loading imposed by the backfill. Any abutting concrete walls or beams shall also have attained sufficient strength. In any case, the backfill placement shall not exceed the following schedule:

Age of Concrete	Backfill Depth
72 hours	1/3 wall height
7 days	2/3 wall height
21 days	Full wall height

Any deviations from this schedule must be approved in writing by the Engineer.

2E. CULVERTS AND RISERS

2E.01 Materials

2E.Ola. CORRUGATED METAL PIPE AND COUPLINGS

Corrugated metal pipes shall be size, gage and length shown on the drawings. Pipe shall be in accordance with AASHTO M-36 bituminous coated in accordance with AASHTO M-190, Type A. Bituminous coating is not required for couplings.

2E.01b. FLARED END SECTIONS

Flared end sections for 7 ft. by 4-l/2 ft. pipe arch to be galvanized and bituminous coated in accordance with AASHTO M-190. Flared end section to be multiple panel body with 12 gage sides and 10 gage center panel. Sides shall have reinforced edge. Reinforced edge to be supplemented by 2 in. by 2 in. by l/4 in. steel angles. Lap seams between panels to tightly joined by 3/8 in. rivets or bolts. Angle reinforcement shall be placed under center panel seams. Flared end sections to have nominal lengths of 6-l/2 ft. (not including connector section) and a nominal end widths of 14-l/2 ft. Flared end section to have 12 in. deep toe plate and 12 in. long pipe arch connector section shop connected to end section.

2E.Olc. CORRUGATED STEEL FLASHBOARD RISERS

Zinc and bituminous coated Type II corrugated steel pipe flashboard riser with l/2 in. by 2-l/4 in. to 2-3/4 in. annular corrugations, Class I, Series A, Shape 1, Coating A, conforming to Federal Specifications WW-P-405B dated June 14, 1974 with Amendment 1 dated May 8, 1976 complete with zinc and bituminous coated steel bottom plate, flashboard guides and braces, packaging and packing level C. Structural steel shall be galvanized or black painted with two coats of zinc dust - zinc oxide primer prior to application of the bituminous coating. The stub invert shall be a maximum of 3 in. above the bottom of the riser and flashboard guides. The bottom of the riser is to be capped with a 10 gauge flat plate. Flashboard guides to be full height and across the bottom as detailed, except that riser diameters greater than 48 in. shall also have a center flashboard guide. 2 in. x 2-l/4 in. angles shall be welded to the top and midpoint (midpoint brace not required for risers under 6 ft. in height) of the riser guides for bracing to provide approximately 3 in. clearance between the brace and the stop log guides.

2E.02 Installation

Excavation shall be inaccordance with Division 2C and bedding, backfill and fill shall be in accordance with Division D.

2F. PILING

Sheet piling shall be lightweight 12 gage galvanized steel sheet piling with minimum section modulus of 1.7 in. per ft. of width equal to Armco Metric Sheeting.

Salvaged steel piling may be used provided it meets the following requirements: (1) pieces shall be straight; (2) interlocking joint edges shall be intact; (3) minimum thickness of sound uncorroded metal shall be 12 gauge (0.1046 in.) measured at bottom of rust or pitting, bright metal and bright metal surfaces; (4) without holes, welded patches will be permitted; and (5) full length or welded splices only for driving depth required. Sheet piling may be furnished in more than one pattern provided interlocking edges are compatible.

Piling shall be driven with a drop hammer, pneumatic or steam pile driver by progressive driving taking care to protect the top. Misalignment of piling shall not exceed six inches from true line as shown on the drawings. Piling outside the alignment limits shall be withdrawn and redriven within alignment limits. Concrete slabs shall be enlarged where necessary to provide minimum concrete thickness of 4 in. outside piling. In all cases, the piling shall be driven to the depth shown or deeper.

In lieu of sheet piling, 6 in. thick concrete cutoff walls may be placed at the Contractor's option. The wall shall be to the depths shown for piling, reinforced with No. 4 rebar 12 in. on center each way. Concrete shall be in accordance with Division 3. Concrete.

2G. RIPRAP

Riprap stone shall be hard and durable and shall weigh not less than 155 lbs. per cu. ft. (specific gravity not less than 2.5). Soft or disintegrated rock will not be allowed. Riprap shall consist of individual stones weighing more than 25 lbs. and at least 50% weighing not less than 100 lbs. each.

The Contractor may obtain riprap mateiral from required excavations, or other approved source.

Riprap layer shall be to the thickness shown. Riprap shall be placed by dropping the rocks into place and shall be arranged so that rock sizes are intermixed using the small sizes to fill the spaces between the larger stones.

2H. GRADING AND SURFACING

2H.01 Grading

All areas to be filled or excavated shall be graded to the finished contours shown within a tolerance of 0.1 ft. and with an allowance for the thickness of the surfacing materials. Edges of graded areas shall be blended to adjacent contours. Disposal areas shall be graded smooth, sloped to drain and blended to adjacent contours.

2H.02 Surfacing

All disturbed areas with an existing gravel surface and all areas to receive new surfacing shall be surfaced with a 9 in. layer of Aggregate for Aggregate Subbase meeting the requirements in Section 703.06 and a 6 in. layer of Aggregate for Aggregate Base meeting the requirements in Section 703.07, Size 1" - 0 of the Oregon Standard Specifications for Highway Construction.

21. CHAIN LINK FENCE

2I.0-l General

Work in this division includes construction of approximately 520 ft. of chain link fence with 1 gate 20 ft. wide, 1 gate 15 ft. wide, 1 gate 12 ft. wide and 2 gates 3 ft. wide. Fence shall be equal to USS Cyclone Invincible, with 3 rows of barbed wire. Fence shall be 6 ft. high (not including the barbed wire). Shop drawings showing all material and installation details shall be submitted for approval before ordering any materials.

21.02 Materials

21.02a. CHAIN LINK FABRIC

Fabric shall be 9 gauge, 2 inch mesh galvanized coated steel per ASTM A-392 1.2 ounce coating. Tensile strength to be 80,000 psi minimum. Top of fabric shall have twisted and barbed selvages.

21.02b. BARBED WIRE

Barbed wire shall be two strands of twisted 12-l/2 gauge steel with 4 point barbs on 5 inch centers. Coating .30 ounce aluminum or Class 3 Zinc per ASTM A-121.

2I.02c. BOTTOM TENSION WIRE

Bottom tension wire shall be 7 gauge coil spring wire with Class 3 Zinc coating (.80 ounce per square feet of wire surface).

2I.02d. TOP AND BRACE RAILS

Rails shall be l-1/2 in. schedule 40 galvanized seamless steel pipe complying with ASTM A-120 or l-5/8 in. by l-1/4 in. roll formed section with minimum yeild stress of 45,000 psi and a minimum section modulus of .165 in.^{3}. Rails to have 2 ounce zinc coating PSF of surface.

2I.02e. LINE POSTS

Posts shall be 2 in. schedule 40 galvanized seamless steel pipe complying with ASTM A-120 or l-7/8 in. by l-5/8 in. roll formed "C" section with minimum yeild stress of 45,000 psi and a minimum section modulus of .395 in.^{3} perpendicular to fence lines. Posts to have a 2 ounce zinc coating PSF of surface.

2I.02f. END, CORNER, AND PULL POSTS

Posts shall be 2-l/2 in. schedule 40 galvanized seamless steel pipe complying with ASTM A-120 or 3-l/2 in. by 3-l/2 in. roll formed section with minimurn yeild stress of 35,000 psi and minimum section modulus of 1,000 in.^{3}. Posts for swing gates shall be in accordance with the following gate leaf widths:

Up to 6'	- 2-l/2 in. schedule 40 galvanized seamless steel pipe or 3-l/2 x 3-l/2 roll formed section as specified above.

Over 6' to 13' - 3-l/2 in. schedule 40 galvanized seamless steel pipe.

Over 13'to 18' - 6 in. schedule 40 galvanized seamless steel pipe

Over 18' - 8 in. schedule 40 galvanized seamless steel pipe.

2I.02g. ACCESSORIES

All accessories except tie wires shall be galvanized to comply with ASTM A-153.

Post tops shall be pressed steel or malleable iron, designed as weather-tight closure caps and to permit the passage of top rail.

Stretcher bars shall be one piece lengths equal to full height of fence fabric with a minimum cross-section of 3/16 in. by 3/4 in. Provide one stretcher bar for each gate and end post and two for each corner or pull post. In lieu of stretcher bars posts may be equipped with integral lock loops formed in the post.

Stretcher bar bands shall be heavy pressed steel or malleable iron spaced not over 15 in. on center with no less than 6 bands per stretcher bar.

Wire ties for tying fabric to line posts and top rail shall be 9 gage aluminum or galvanized steel. Tie spacing shall be 14 in. on center for posts and 24 in. on center for top rail. For tying fabric to tension wire, use 11 gage galvanized hog rings spaced 24 in. on center.

2I.02h. GATES

All gates more than 3 ft. wide shall be double leaf type. Gate frames shall be fabricated from l-1/2 in. galvanized seamless steel pipe complying with ASTM A-120. Additional horizontal, vertical and diagonal members shall be provided to ensure proper gate operation, prevent sag and for attachment of fabric, hardware and accessories.

Gate fabric shall be same as fence fabric. Vertical edges shall be fastened to frame as specified for the fence posts. Top and bottom edges shall be fastened to frame as specified for top rail of fence.

Gate hardware shall be malleable iron or pressed steel galvanized in compliance with ASTM A-153. Hinges shall be non-lift-off-type offset to permit 180' opening. Stops shall be provided for all double leaf gates consisting of a flush plate with anchors set in concrete to engage the center drop rod or plunger bar. Provide a locking device with padlock eyes as an integral part of the latch. Padlock eyes on double leaf gates shall be designed to lock both leaves with one padlock. All gate leaves shall be equipped with keepers to hold the gates in the open position until manually released.

21.02i. CONCRETE

Concrete shall comply with Division 3 of these specifications.

21.03 Installation

Fence installation shall not begin until completion of all grading. Maximum post spacing shall be 10 ft. Post holes shall have minimum diameter of 9 inches and a minimum depth of 3-l/2 ft. with bottom of posts set 3 ft. below ground surface. Posts shall be set plumb and in proper alignment and grade. Posts shall be held in position during placing and finishing of concrete. Place concrete around posts in a continuous pour and tamp for consolidation. Trowel finish tops of post footings and slope or dome to direct water away from posts. Extend concrete for gate posts to underside of bottom hinge. Set keepers, stops and other accessories into concrete as required.

Install fabric on outside of framing with approximately 2 inches between finish grade and bottom of selvage.

Fabric shall be stretched and anchored to framework so that fabric remains in tension after pulling force is released.

Gates shall be installed plumb and level with hardware -adjusted for smooth operation and lubricated where necessary. Ground set items shall be set in concrete as recommended by the manufacturer and to a depth of 3-l/.2 ft. below finish grade.

Bend ends of all wire ties to minimize hazard to persons or clothing.

Install nuts, tension band and hardware bolts on side of fence opposite fabric side.

DIVISION 3. CONCRETE WORK

3A. SCOPE

This section covers concrete materials, placement, finish and curing. For excavation and backfill requirements see Division 2. Vapor barrier shall be as specified in Division 7.

3B. COMPOSITION

Concrete shall be composed of Portland cement, water, fine and coarse aggregate. and an air entraining admixture. Concrete shall contain 5-l/2 sacks of cement per cu. yd. and shall be designed to achieve a minimum of 3,000 psi compressive strength at the age of 28 days. The Contractor shall submit for the Engineer's approval a concrete mixture design certified by an independent testing laboratory for all concrete to be used under this contract.

3C. MATERIALS

3c.01 Cement

Cement shall conform to Federal Specification SS-C-192, Type II, low alkali. Cement will be accepted on the basis of a manufacturer's mill certificate that the cement furnished meets the physical and chemical requirements of the foregoing specification.

3C.02 Water

Water shall be fresh, clean and free from injurious amounts of sewage, oils, solids, alkali, salt or organic matter. The water content of all cement mixtures shall be the minimum necessary to place the mixture, being used. The maximum allowable concrete slump at time of concrete placement shall not exceed 4 in.

3c.03 Aggregates

a. Aggregates shall be clean, hard, tough, durable and shall conform to the requirements of Federal Specification SS-A-281. Aggregates will be rejected if the specific gravity is less than 2.60.

b. Fine aggregate shall consist of natural sand, manufactured sand, or a combination of natural and manufactured sand. It shall be uniformly graded from 0 to No. 4 sieve designation to provide a fineness modulus from 2.5 to 3.0. Fine aggregate will be rejected if: (1) deleterious substances such as shale, clay lumps, mica, loam and soft particles exceed 3% by weight; (2) the portion retained on a No. 50 screen shows a weighted average loss of more than 8% by weight when subjected to 5 cycles of Sodium Sulphate test for soundness or 12% loss when subjected to 5 cycles of Magnesium Sulphate; (3) portion passing a No. 100 sieve is 8% or more by weight; or (4) portion passing a No. 200 sieve is 2% or more by weight.

c. Coarse aggregate shall consist of gravel or crushed stone. It shall be uniformly graded from No. 4 to l-1/2 in. sieve designation (square mesh opening). Coarse aggregate will be rejected if: (1) deleterious

substances such as shale, clay lumps, organic material, soft particles, and material passing No. 200 screen exceed 2% by weight; (2) the L.A. rattler test results in 10% weight loss at 100 revolutions or 40% weight loss at 500 revolutions; (3) the Sodium sulphate test for soundness results in an average weighted loss of more than 10% by weight when subjected to 5 cycles, or 15% loss when subjected to 5 cycles of Magnesium Sulphate; or (4) portion passing a No. 200 sieve is 0.5% or more by weight.

d. The Contractor shall furnish to the Government compliance certification and analysis from an independent testing laboratory for approval of the concrete aggregates to be used. Approval of a source of concrete aggregates is not to be construed as approval of all materials from that source. The right is reserved to reject materials from certain localized areas, zones, strata or channels, when such materialsare unsuitable for concrete aggregates as determined by the Engineer.

3c.04 Forms

See Paragraph 3F.Olc for dimensional tolerance.

a. Forms shall be sheathed or lined with plywood or other approved material and shall be true to line and grade. Metal faced or metal pan forms will not be permitted. Form panels shall be clean, free of encrusted grout and coated with a non-staining form oil shortly before concrete is placed. Reinforcing steel and surfaces of construction joints shall be kept clean of form oil and, if necessary, protective coverings may be required during form oiling operations. All oil spots on reinforcing steel and construction joint surfaces shall be removed. Form panels shall be as large as practical to minimize seams and shall not be used when damaged or second ply is exposed on the plywood interior surface. The form shall be substantial and sufficiently tight to prevent leakage of mortar and sufficiently braced and tied so as to maintain specified position and shape.

b. Form ties shall be approved round design or as approved for type of forms used and free from devices that will leave holes or depressions larger than l-1/4 in. diameter and of a type that when forms are removed they shall leave no metal within 1 in. of finished surfaces. Top row of ties shall be between 3 in. and 12 in. of grade.

c. All exposed exterior corners shall be chamfered 3/4 in. to 1 ft. below finish backfill grade.

d. Forms shall be removed after pouring as early as practical in a manner which will prevent injury to the concrete. Unless otherwise directed, forms, falsework and shoring supporting the weight of the concrete as under beams, slabs, large openings, etc., shall be removed within 7 days and all other form work shall be removed within 24 hours after concrete placement. The Engineer reserves the right-to have supports and forms left in place up to 21 days under slabs and beams and up to 72 hours for other form work if weather and curing conditions so warrant. No forms or supports shall be left on the walls, under slabs or in the backfill.

\

3D. BATCHING AND MIXING

Ready-mixed concrete utilizing approved aggregate shall be used. When a truck mixer is used, each batch of concrete shall be mixed not less than 70 nor more than 100 revolutions at the rate of rotation designated by the manufacturer of the equipment as mixing speed. Mixing shall be performed in the presence of the Inspector at the job site. The air content shall be between 3 and 6 percent of the volume of the concrete.

3E. PLACING

a. Concrete shall be placed only in the presence of the Inspector, and only when the air temperature is between 40° and 90°F. The Inspector shall be notified of intent to pour 24 hours before pour is to start. All forming shall be completed prior to inspection by the Inspector and before the concrete is ordered.

b. Adequate cover during expected rainy periods shall be provided for concrete placement protection. Cover materials shall be set up at the job site, ready for installation before concreting is started and shall remain in place until the concrete has set sufficiently to resist any damage to the finish from rainfall.

c. Concrete shall not be placed on a frozen sub-grade or against any surfaces having deposits of frost or ice. See paragraph 36.04 for placing concrete on or against existing concrete.

d. Water shall be removed from within forms and excavations before and during placement of concrete.

e. Concrete shall be conveyed from mixer to forms as rapidly as possible and deposited as near final position as possible by methods which will prevent segregation or loss of ingredients. Freely dropping concrete vertically a distance of more than 5 ft. or depositing a large quantity at any point and running or working the concrete along the forms will not be permitted. Concrete shall be worked into the corners and angles of the forms and around all reinforcement and embedded items without permitting the materials to segregate. Once started, concrete placement shall be carried on as a continuous operation until the placing of the panel or section is completed. Concrete shall be placed within 30 minutes after the cement has been added if transported in nonagitating equipment, or 90 minutes if transported in agitators, unless otherwise authorized.

f. Concrete shall be consolidated with the aid of mechanical vibrating equipment supplemented by hand spading and tamping. Vibrating equipment shall be of the internal type and shall at all times be adequate to properly consolidate all concrete.

3F. FINISHING AND CURING

3F.01 Finishing All Concrete

a. Defective concrete, voids left by the removal of the tie rods, ridges, lips and local bulging on all concrete surfaces shall be repaired immediately after the removal of forms. Unless otherwise authorized by

the Engineer in writing all concrete finishing shall be completed within 48 hours of concrete placement. Voids left by the removal of the tie rods shall be reamed and completely filled with drypacking mortar. Defective concrete shall be repaired by cutting out the unsatisfactory material and replacing with new concrete which shall be secured with keys, dovetails or anchors. All unformed surfaces of concrete shall have a wood float finish, unless otherwise specified, without additional mortar and shall be true to elevation as shown on the drawings. All wall tops shall be steel troweled and edges finished with a 3/8-in. radius edging tool. Every precaution shall be taken by the Contractor to protect the finished surfaces from stains or abrasions. Failure to maintain the concrete finish schedule will be cause for suspension of concrete placement.

b. All concrete slabs and walkways shall be float finished and sloped to indicated grades. Floating may be performed by use of hand or power driven equipment. Floating shall be started as soon as the screeded surface has stiffened sufficiently to produce a uniform surface free from screed marks. Dry topping will not be allowed. A true plane surface shall be provided for a minimum width of 6 in. between all mating flashboard guides. Exposed edges of slabs shall be finished with a 3/8-in. radius edging tool. Additional finishes may be required where noted on the drawings.

c. Irregularities of exposed surfaces shall not exceed l/8 in. for gradual irregularities as measured by a 5 ft. template or l/4 in. for gradual irregularities as measured by a 10 ft. template. Abrupt irregularities will not be permitted. Deviation from line and dimensions shall not exceed l/4 in. for fishrearing and holding ponds and l/2 in. for all other work unless noted otherwise on the drawings. However, the minimum thickness allowed for any structural slab or wall shall be l/4 in. less than dimensioned.

3F.02 Special Finishes (Where noted on the drawings)

a. WALLS AND CURBS (Sack Finish)

Where indicated on the drawings the exposed surfaces shall be stoned or ground to expose air pockets and finished by applying cement mortar with a brush and sacked to give a smooth uniform finish immediately upon form removal. All finish shall extend 12 in. below backfill grade line.

b. SLABS AND WALLS

Troweled Finish - Slabs shall be steel troweled after float finishing as specified above and when concrete is sufficiently hard to prevent excessive amounts of fines and water from working to the surface.

Sufficient pressure shall be applied to the trowel to flatten and smooth the concrete and produce a dense, uniform surface free of blemishes, ripples and trowel marks.

Broom Finish - Slabs and wall tops shall be floated and troweled as specified above and then broomed immediately following steel troweling. The broom shall be of an approved type that will produce regular corrugations

not over 1/16 in. depth. Strokes of the broom shall be made square with the slab, slightly overlapping, continuous from edge to edge of the slab. The finished surface shall be free of porous spots, irregularities, depressions and small pockets.

3F.03 Curing

a. Immediately following the completion of the concrete finish requirements, all concrete surfaces shall be kept wet for a period of not less than 5 days after placing by covering with a water-saturated material or other approved methods.

b. Membrane curing will be permitted only where specifically noted on the drawings. A curing compound conforming to ASTM C-309, Type 2, white pigmented, may be used and shall be applied in two coats immediately following the completion of the concrete finish requirements. In preparation for the curing compound application, the concrete shall be thoroughly saturated with water. Curing compound shall be applied as soon as the surface water has disappeared. The concrete shall be protected from damage at all times. No curing compound will be permitted on surfaces against which concrete or other material will be bonded.

c. In lieu of water curing, an epoxy chlorinated rubber surface sealer and hardener equal to TRI-KOTE 18 may be used. Application rate shall be not less than one gallon for 250 sq. ft. of surface area. Application shall be immediately following finishing at a spray pressure of 30 to 40 p.s.i. Concrete surface shall be kept damp at all times until sealer is applied.

d. During the curing period when there is likelihood of freezing temperatures, suitable and sufficient measures must be provided to maintain all concrete surfaces at a temperature of not less than 50°F for a period of not less than 5 days after concrete placements. All necessary materials for covering or housing must be on the work site before concrete work is started and must be effectively applied or installed. Where artificial heat is employed, special care shall be taken to prevent the concrete from drying by maintaining the curing procedures. All concrete placed in the forms shall have a material temperature range between 40° and 90°F.

3G. EMBEDDED ITEMS (See also Division 5)

36.01 General

Before placing concrete, care shall be taken to determine that all embedded items are properly positioned, firmly fastened and clean.

36.02 Materials

a. Steel reinforcement shall conform to Federal Specification QQ-S-632 Type II, Class B-40 or B-60. Wire mesh shall conform to Federal Specification RR-W-375. Metal chairs shall be galvanized or plastic coated. Bars and/or wire mesh shall be cut, bent and installed in accordance with the American Concrete Institute Building Code requirements. The Contractor shall submit reinforcing steel shop drawings for review by the Engineer prior to steel fabrication. The Engineer's review will be for shape, size and spacing only.

b. All steel bars shall be furnished in full lengths where possible, except at the base of all concrete walls where 36-bar diameter splices are permitted. Other splices shall have a length of not less than 30 times the nominal diameter of the reinforcement unless otherwise shown and shall be well distributed or else located at points of low tensile stress. Sheets of wire mesh reinforcement shall overlap each other 12 in. and shall be securely fastened at the ends and edges. Size, spacing and quantity of reinforcing bars shall be as shown or noted on the drawings within the following tolerances:

1. Depth, d, in flexural members, walls, columns where d is 24 in. or less: +I/4 in.

2. Depth, d in flexural members and columns where d is more than 24 in.: ± l/2 in.

3. All other location dimensions: + 2 in., except that specified concrete cover at ends of members shall not be reduced.

Reinforcement shall be held securely by wire, mortar blocks or metal chairs during the pouring of the concrete. In general, all reinforcement shall be securely wired in proper position (alternate bar intersections minimum) and supported before concrete is poured in any section. Special precautions shall be taken to insure that the wire mesh is properly located at all times during the pouring of the concrete. Except as otherwise shown on the drawings, the thickness of concrete over reinforcing bars shall be as follows:

Between main bars and surface of concrete deposited against earth without intervening forms . . . . . 3 in.

Between reinforcing bars more than 5/8 in. diameter and formed concrete surfaces . . . . . 2 in.

Between bars 5/8 in. or less in diameter and formed concrete surfaces . . . . . 1 l/2 in.

Between stirrups and ties and surface concrete . . . . . 1 in.

Between slab bars and top of slab . . . . . .I l/2 in.

Between slab bars and formed bottom of interior building slabs . . . . . 1in.

3G.03 Waterstop

Waterstop shall be installed only where indicated on the drawings and shall be equal to Servicised Durajoint Type 4 PVC Waterstop, as manufactured by W. R. Grace & Co. Waterstop in walls shall be spliced to waterstops in slabs. All splices and butt joints in the waterstop shall be heat fused as recommended by the waterstop manufacturer.

36.04 Concrete Joints

a. Construction of stop pour joints shall be located only as shown on the drawings and shall be formed with or without shear key and waterstop as detailed. Should the Contractor require other construction joints than shown on the plans, the Contractor shall submit requests for Engineer's approval prior to placing concrete forms. Contraction and expansion joints shall be constructed at the locations shown and to the dimensions as detailed. Reinforcing bars shall not extend through contraction or expansion joints. Premolded joint filler shall be equal to Homex 300 as manufactured by Homasote Co.

b. Concrete joint preparation for additional concrete lifts shall require the hardened concrete face to be roughened and cleaned to remove loosened aggregate particles or damaged concrete. Immediately prior to concrete placement the surface shall be again cleaned, thoroughly wetted and followed by flushing with a slurry of neat cement and water.

c. At joints with existing concrete or concrete over 30 days old the surface of hardened concrete shall be roughened and then cleaned to remove all dust, loose aggregate particles or damaged concrete. Immediately prior to placingnew concrete, the hardened concrete surface shall be coated with an epoxy bonding adhesive equal to Adhesive Engineering Co. "Concresive #1 Long Pot Life" applied in accordance with manufacturer's recommendations.

3H. DAMAGED OR DEFECTIVE CONCRETE

Concrete not conforming to the specifications or concrete damaged from any cause that is found defective shall be removed and replaced with acceptable concrete at no additional cost to the Government. Concrete test cylinders will be taken by the Government for the purpose of checking concrete quality of materials furnished. All concrete placed without approval by the Inspector shall be considered defective concrete and shall be subject to removal and replacement.

DIVISION 4. GROUT

4A. MATERIAL

Grout shall be a waterproof non-corrosive and non-shrink grout equal to EMBECO 636 Grout as manufactured by Master Builders.

4B. WORKMANSHIP

All grouting shall be accordance manufacturer's instructions.

DIVISION 5. METALS

5A. METAL BUILDING

5A.01 General

The building shall be an all-metal prefabricated type erected from standard stock components supplied by an manufacturer regularly engaged in the fabrication of metal buildings. The building shall be complete in all respects, including doors, roof vents, hardware and all necessary painting, anchors, bolts, thrust angles or tie rod, fastenings and sealant required to provide an entirely weather-tight and dust-tight structure.

The building shall have a gable roof with a minimum slope of 3/4 in. rise for each 12 in. of horizontal run. Side and end walls shall be vertical. Interior bay supports shall be clear span. At ends of building, the support may be either clear span or beams with columns spaced to permit placement of doors and windows.

5A.02 Design Conditions

The building shall be designed to withstand the dead load of the structure plus a vertical live load of not less than 20 poinds per square foot of horizontal roof projection and a wind load of 25 pounds per square foot. Loads shall be applied to building surfaces and structural members as specified by MBMA "Recommended Design Practices Manual." Wind loads are to be applied inward and outward on sheeting and to have wind uplift rating.

The frames and other welded plate members shall be designated in accordance with the requirements of the American Institute of Steel Construction "Specification for the Design, Fabrication and Erection of Structural Steel for Buildings". All light gauge cold rolled steel structural members shall be designed in accordance with AISI "Specifications for the Design of Light Gauge Cold-formed Steel Structural Members." All welding shall conform to the requirements of the American Welding Society.

5A.03 Structural Steel

Main framing members shall be structural steel rigid frames or trapped beam and columns. Secondary framing members shall consist of hot or cold rolled shapes and rods. Adjustable threaded rod cross bracing, purlins, girts, purlin and girt spacers, flange braces and other necessary members shall be installed to provide structural integrity. Framing shall be provided at all wall openings. This framing shall be secured to structural elements of the building as required to reinforce the opening and provide anchorage for the finish frames. Connection angles shall be provided for design loading conditions specified in Division 5A.02. All members shall be full length without splices where feasible.

All structural steel shall comply with Federal Specification QQ-S-741D.

5A.04 Roofing and Siding

All exterior roof covering and siding shall be precision roll-formed

factory painted metal panels of steel. Sine curve corrugated panels are not acceptable. Roof and wall panels shall be formed from 26 gauge or heavier galvanized steel conforming to Federal Specification QQ-S=775D, Type I, Class D. Roof and wall panels shall be factory finished on both sides before forming with a thermosettling vinyl coating. Panel colors will be selected by the Engineer after award of the contract, from the manufacturer's standard colors.

Metals panels shall be precision roll-formed with a major corrugation at not more than 12 in. centers. The ridge cap shall be one piece from purlin to purlin on each side of the roof ridge. The ridge piece shall be factory-formed to match the roof slope and roof panel corrugation. The ridge piece shall be of the same material and finish as the roof panels. The gable fascia and roof trim pieces shall be formed from. 26 gauge or heavier galvanized steel. All materials shall be factory painted to match the roof and/or wall panels.

All exposed wall panel fasteners shall be covered with a plastic cap of the same color as the metal panels.

Flashing material at roof vents shall be equal to Dow Chemical Co. "Saraloy 640R" plastic flashing.

Metal panels and accessories shall be installed in strict accordance with the panel manufacturer's recommendations and these specifications. Extra care shall be taken when field drilling holes to prevent buring or staining painted surfaces from drill shavings. Panels with burned or stained finish and panels that have been dented or otherwise damaged shall be replaced by the Contractor at his own expense.

Panels shall be applied with side laps of at least one full corrugation and at least 6 in. end lap at ridge cap. All panel ends shall be sealed with a resilient set in mastic top and bottom to insure a completely sealed structure. All side laps of both roof and wall panels shall be sealed with a 3/16 in. bead of permanently pliable mastic.

The Contractor shall furnish a 5-year written guarantee backed by the panel manufacturer against roof panel finish failure by cracking, crazing, chipping, blistering, peeling, or loss of adhesion caused by installation procedures, normal exposure and service.

Guarantees shall provide for repainting in-place of failed panel finish and repair of leaks within 30 days after notification at no additional cost to the Government.

5A.05 <u>Roof Vents and Fasteners</u>

Ridge vent shall be furnished complete with operable damper equipped with a chain operator. Chain operator shall be sufficiently long to permit operation of the damper from the floor of the building and attachment to the nearest wall.

Ridge vent shall have a throat dimension of at least 9 in. wide and 12 ft. long. Ridge vent shall be fabricated from galvanized steel sheets, 28 ga. minimum thickness, painted the same color as the roof panels.

Ridge vent shall be stormproof, with enclosed ends and openings fitted with galvanized bird screen.

All bolts, nuts, washers, screws, embedded anchor bolts, and miscellaneous fasteners for field assembly of the metal building except those made of high tensile steel shall be galvanized, cadmium plated or stainless steel.

5B. MISCELLANEOUS METALS

5B.01 General

Steel shall be free from mill scale, flake rust orpitting, All Steel to be galvanized shall be hot-dipped galvanized in accordance with ASTM A-123. Galvanizing shall be after fabrication.

5B.02 Materials

5B.02a. STRUCTURAL STEEL SHAPES, PLATES AND BARS

Structural steel shapes, plates, and bars shall conform to Federal SpecificationQQ-S-741.

5B.02b. FASTENERS

All bolts, nuts and washers shall be galvanized, cadmium plated or stainless steel as noted. Cinch anchors shall be equal to Phillips Red-Head non-drilling flush anchors.

5B.02c. SCREEN

Screen shall be 4 x 4 x .105 steel double weave woven wire as manufactured by Western Wire Works. Screens panels shall be furnished full size with no splices.

5B.02d. BAR GRATING

Bar grating shall be aluminum equal to Ryerson #19-AP-4 with l-1/2 x 3/16 in. bearing bars l-3/16 on center and 5/16 in. cross bars 4 in. on center. Maximum panel width shall be 3 ft. and minimum panel width shall be 18 in.

5B.03 Fabrication

Field welds of galvanized steel components will not be allowed unless so indicated on the drawings and all such field welds shall be painted with Galvacon or equal.

The finished diameter of bolt holes shall not be more than l/16 in. larger than the nominal diameter of the bolt unless otherwise shown.

On all exposed metal surfaces all cuts, drilling, welds, etc., shall be smooth free of burrs, scale, jagged edges, etc. All grating cuts shall be saw cuts.

All welds shall be continuous and to the full strength of components unless specifically noted otherwise.

All shop fabrication shall be to the shapes and dimensions shown within 1/16 in.

5B.04 Installation

Embedded items shall be securely fastened in place to prevent displacement during placing and finishing. Tolerance in the finished work shall be 1/4 in. for horizontal location dimensions and 1/8 in. for elevations; however, all metal surfaces and edges shall be flush with adjacent concrete surfaces were applicable.

Movable items shall operate smoothly and easily without binding and fit the mating parts at all appropriate locations and orientations.

DIVISION 6. DOORS AND WINDOWS

6A. GENERAL

All doors shall be supported by the building framing members with sufficient braces, stiffeners and anchors to prevent any deflection due to wind or normal pressures. Wall panels shall be jointed closely, secured and sealed to the frames to provide a tight weather-proof seal. Caulk all door frames to provide weather-tight seal.

6B. OVERHEAD DOORS

Overhead door shall have clear opening dimensions of 10 ft. wide by 10 ft. high and shall be aluminum and fiberglass sectional upward-acting door equal to those manufactured by the Overhead Door Corporation. Door shall be fabricated from 6063-T6 aluminum alloy extruded shapes to produce a door nominal 2 in. thick. Center rails shall be designed with a weather joint. A neoprene weatherstrip shall be installed on bottom rail to seal the bottom of the door against weather. Fiberglass panels shall be deeply ribbed .04 in. minimum thickness and shall extend the full width of each section. Each panel shall consist of a single fiberglass panel securely fastened to the rails, end stiles and center stiles.

Door shall be accurately counterbalanced with torsion springs, tapered drums and corrosion resistant lift cables with chain hoist. Door shall be equipped with corrosion resistant hardware and ball bearing rollers. Tracks shall be 2 in. corrosion resistant steel mounted on corrosion resistant brackets or angles. Doors shall be equipped with tumbler locks with single unit lock mechanism and adjustable keepers on track.

6C. PASSAGE DOORS

All items of finish hardware shall be U.S. 26D or U.S. 28 finish. Door stops shall be Federal Specification FF-H-OOlllb (GSA-FSS) cast aluminum or cast bronze. Door stops shall be Type 1330E or 1330AE as appropriate for clearance of door above floor.

Hinges for steel door shall be Federal Specification FF-H-116~ Type T2107, 4-l/2 by 4-l/2 full mortise, template, loose non-rising pin, ball bearing. Lock sets shall be Federal Specification FF-H-106, Type 161. Doors shall be furnished with hardware items as follows: (a) Door leaf shall have a floor mounted door stop, l-1/2 pair hinges, and (b) type 161A lock set on exterior door, type 161N on Interior crew room door and type 161T on rest room door.

All weatherstripping shall be fabricated using black neoprene. Sponge shall be closed-cell extreme temperature type meeting requirements for MIL R=6130A, Type 2, Grade C. Solid neoprene shall be extreme temperature type meeting requirements of MIL R-6855, Class 2, Grade 40. Fastener shall be stainless steel,' self-tapping screws for all-weather strip application. Weather stripping for passage door head and jambs shall be extruded aluminum equal to Zero Weather Stripping Company No. 140.

Doors shall be equal to Steelcraft Manufacturing Company "Full Flush". Doors shall have seamless 18 ga. cold roll steel faces with honeycomb core, with thickness, size and swing as shown. Doors shall be welded construction, prepared for hardware specified, sound deadened bonderized and finished with one baked-on or epoxy shop prime coat. Doors shall be reinforced at closures, locks and hinges and shall be furnished with rigid vinyl top channel closures. Metal door frames shall be equal to Steelcraft Manufacturing Company 16 ga. cold rolled steel frames furnished with a least 3 jamb anchors and one floor anchor per jamb member. Frame face width shall be 2 in. nominal. All metal door frames shall be prepared for l-1/2 pair hinges with reinforcing and dust covers at hinges and strike. Steel frames shall be welded construction, fully bonderized and shop primed. Rubber mutes shall be installed at lock jamb.

Frames shall be set plumb and true securely anchored to jamb members and bottom of jamb shall be anchored to concrete. Flashing and sheet metal trim shall have mastic applied at laps and junctions to insure a weather-tight structure.

6D. WINDOWS

Windows shall be dual glazed double strength Type II, Class 1, Quality 6 or better glass. Glazing shall be installed with sealants and sealing tapes as recommended by the glazing manufacturer. Each piece of glass shall bear the manufacturer's label identifying type, thickness and quality of the glass. Window shall be single horizontal sliding, fabricated from stock extruded aluminum sections with anodized finish and shall meet the requirements of AAMA Specification HS-B2. Window shall have at least half of its area operable and shall be furnished with an insect screen.

DIVISIONS 7, 8, 9, 10, 11, 12, 13, and 14

These Divisions are not applicable to work under this contract.

DIVISION 15. MECHANICAL

15A. GENERAL

15A.01 Scope

Work covered by this section includes furnishing and installing all piping, valves, slide gates and testing of all systems.

15A.02 Codes and Abbreviations

ASTM: American Society for Testing and Materials
AWWA: American Water Works Association

15B. PIPING

The work covered by this section includes furnishing and installing the piping systems shown on the drawings.

The types of material to be used in the piping systems are shown on the drawings. Specifications for each type of material are listed hereinafter. All piping systems shall be constructed from the materials shown and to the lines, grades and dimensions shown. Where not shown, the pipes shall be located to avoid interference with other features and sloped a minimum of 0.001 to drain.

All piping systems shall be plugged, tested and left ready for use.

15B.01 Materials

15B.Ola PVC SUPPLY PIPE AND FITTINGS

Pipe and fittings shall be made from ASTM D1784, Type I, Grade 1 PVC.

Pipe shall comply with AWWA C900, Class 160, SDR 26 or ASTM D1785, Schedule 40.

Fittings shall be socket type complying with ASTM D2467. Solvent cement for socket joints shall comply with ASTM D2564 made especially for PVC piping.

15B.Olb PVC DRAIN PIPE

Pipe and fittings shall be rubber gasketed complying with ASTM D3034, made from material complying with ASTM D1784, Type I, Grade I.

15B.Olc STEEL PIPE AND FITTINGS

Steel pipe shall conform to ASTM A-53, with 3/16 in. minimum wall thickness. Steel pipe to be buried in the ground shall be coated and wrapped in accordance with AWWA C203 finished with a single wrap craft paper. The

minimum number of sections for each fabricated fitting shall be as follows:

0 through 22-1/2°	2 sections (1 miter)
over 22-1/2° through 45°	3 sections (2 miters)
over 45° through 67-1/2°	4 sections (3 miters)
over 67-1/2° through 90°	5 sections (4 miters)

The centerline length of each piece between miters shall not be less than 1/2 the nominal pipe diameter.

Steel pipe joints shall be flanged, welded, bell and spigot, or flexible coupling connected.

Pipe flanges shall conform to AWWA C207 Class D flanges except where noted as Class B flanges. Flanges to be welded or screwed on shall be shop or factory mounted and refaced after mounting. Gaskets for flanges shall be full facing rubber gaskets cut from 1/4 in. thick Buna N rubber sheet stock with Durometer rating 65/76 or shall be factory formed, 1/4 in. nominal thickness of equal quality material.

Welded joints shall be single butt weld type in conformance with AWWA C208, Table 1. Welded connections shall be coated in accordance with AWWA C203-73.

Bell and spigot ends shall be in accordance with AWWA C200-75 Section 3.7.7. Spigot ends shall have groove for confining rubber gasket.

Flexible couplings for connecting steel pipe to steel pipe or for connecting steel pipe to PVC pressure pipe shall be equal to Smith Blair 411 with corrosion resistant nuts and bolts. Flexible couplings for connecting steel pipe to PVC drain pipe shall be Smith Blair 413 with corrosion resistant bolts.

Field procedure and coal tar enameling of couplings shall in accordance with AWWA C203.

15B.01d CAST IRON SOIL PIPE AND FITTINGS

Cast iron soil pipe and fittings shall comply with Cast Iron Soil Pipe Institute Standard No. 201-72.

15B.02 Pipe Handling and Transportation

During loading, transportation, unloading and laying or installation, every precaution shall be taken to prevent injury or damage to the pipes. Use strap slings for lifting coated pipes.

Coated and wrapped steel pipe shall be handled and transported in accordance with AWWA C203 Section 4.1.

Any section of pipe with a damaged end or barrel shall be repaired as directed if in the opinion of the Engineer a satisfactory repair can be

3

made; otherwise, the damaged section shall be replaced with an undamaged section at the expense of the Contractor.

15B.03 Installation

15B.03a GENERAL

Buried pipe lines shall be installed only in the presence of the Inspector. Excavation and backfill shall be as specified in paragraph 28.

Pipe trenches shall be kept free of water which might impair joining operations at all times when pipe is being placed.

In case defects are revealed by inspection, the Contractor shall replace the defective pieces and shall bear the expense. All pipe and fittings shall be carefully cleaned before laying. Precautions shall be taken to prevent foreign material from entering the pipe. Pipe shall be laid with bell ends facing in the direction of laying and generally on an uphill direction unless otherwise directed. Pipe shall be cut only to remove defective places or for closing pieces. Such cuts shall be made square.

Pipe shall be laid on a prepared bed of the specified depth and gradation. The bedding shall be placed in the excavated trench and shall be compacted. Depressions for pipe bells and couplings shall be hand excavated. After the bedding has been compacted, the top 1 in. shall be loosened to provide cushioning for uniform pipe support. To insure full bearing of the pipe on the bedding material, the pipe shall be lifted after initial placement to allow the Inspector to view the depression left by the pipe. If full bearing is not evident, the bedding surface shall be reshaped or additional bedding material added until full bearing is achieved.

All laying operations to provide water-tight pipe and pipe joints shall be the responsibility of the Contractor. If adjustment of the position of a length of pipe is required after it has been laid, it shall be removed and rejoined as for a new pipe. Prior to acceptance the inside of the pipe shall be cleaned and all debris removed.

The pipe units shall be fitted together and the joints shall be drawn together so that the bells and spigots are as nearly fully engaged as practicable. Care shall be exercised to secure true alignment. The rubber gaskets shall be fitted properly in place and lubricated as necessary, and the pipe shall be fitted together in a manner to avoid twisting or otherwise displacing or damaging the gaskets.

Thrust blocking shall be provided as required on all changes of direction in the pipe lines such as: opposite branch connections of tees or wyes, outside bends or elbows either horizontal or vertical, at reducing changes in diameter, at dead ends and any other places where forces due to pressure or flow of water may develop. Thrust blocking shall equal or exceed the pipe manufacturer's recommendations for applicable test pressures listed in the Test Schedule in Division 15D. and a soil bearing strength of 2000 lb. per sq. ft.

Exposed piping shall be run parallel and square with the lines of the structures unless otherwise indicated. Pipes shall be accurately cut to allow assembly without springing or forcing. Pipe to be embedded in concrete shall be secured in placed to prevent displacement during

concrete placement. Do not weld embedded pipe to reinforcing steel. Embedded pipes without seep collars may at the Contractor's option be grouted into blockouts. Grouting shall be accordance with Division 4. All buried piping shall have a flexible joint or coupling within 2 ft. of the concrete surface whether shown on the drawings or not.

15B.03b PVC PIPE AND FITTINGS

Plastic pipe shall be installed in accordance with the manufacturer's instructions, except that bedding shall be in accordance with Division 2D.02a. Install electronically-detectable plastic tape 1 ft. below finished grade over all plastic pipe buried in the ground. Tape to be Allen "DETECTATAPE" 3 in. wide and imprinted continuously "BURIED WATER LINE BELOW" or other appropriate wording approved by the Engineer.

15B.03c. STEEL PIPE

Field welding of steel pipe shall be in accordance with AWWA C206. Galvanized piping shall not be field welded.

Flanged pipe shall be installed using full-facing rubber gaskets between each pair of mating flanges. Gaskets shall be cut from l/4 in. thickness of Buna N rubber sheet stock with Durometer rating of 65/76 or shall be factory formed, l/4 in. nominal thickness of equal quality material. All bolts shall be installed in flanged pipe but shall not be tightened until the complete run of piping has been installed and aligned. Bolts shall be tightened uniformly to a torque of 30 to 40 foot-pounds for 5/8 in. bolts, 50 to 65 foot-pounds for 3/4 in. bolts, 80 to 100 foot-pounds for 7/8 in. bolts and 120 to 150 foot-pounds for 1 in. bolts. Bolts threads and nut bearing surfaces shall be lubricated before tightening.

Threaded joints shall have a thread joint compound applied to a the male threads before making the joint.

Coated and wrapped steel pipe shall be handled and stored at the installation site in a manner that will prevent damage to the pipes, coatings and wrappings. Pipes shall be lowered into the trench by means of wide belt slings. Chains, cables, tongs or other equipment likely to damage the coating will not be permitted, nor will dragging or skidding the pipe. The Contractor shall allow the Inspector to examine the underside of the pipe. Any damaged areas shall be repaired before lowering the pipe into the trench. During installation, every precaution shall be used to prevent damage to the coating. No metal tools or heavy objects shall be permitted to come in contact with the coating. Workmen will not be permitted to walk on the pipe unless necessary and in case of such necessity, the workmen shall wear shoes with rubber or composition rubber heels. Any damage to the pipe or coating shall be repaired at the expense of the Contractor as directed by the Engineer. All field joints shall be by means of flexible couplings, bell and spigot ends, threaded couplings or flanges. No field welding will be permitted. Couplings and exposed pipe ends shall be reprimed in the field. When the primer is dry, these surfaces shall be coated with AWWA coal tar enamel recommended by the manufacturer of the coating used on the pipe. The coating shall be capable of conforming to the normal movement of the buried pipe without cracking.

15B.03d CAST IRON SOIL PIPE AND FITTINGS

Unless detailed otherwise, the installation of cast iron soil pipe shall

be as recommended in Cast Iron Soil Pipe Institute Pamphlet No. 100, except that soil pipe laid in trenches shall not be supported with masonry blocks at couplings and bedding shall be in accordance with Division 2D.02a.

Assembly of joints shall as recommended by the manufacturer.

15C. VALVES AND SLIDE GATES

15c.01 Slide Gates

Slide gates shall be Waterman C20 with minimum frame heights and rising stem extensions as shown or full frame heights. Frame parts, stem extensions, anchor bolts and assembly bolts shall be galvanized. Lift nuts shall be cast bronze. Tops of all stem extensions or tops of all full frames shall be fastened to adjacent concrete walls with galvanized pipe clamps Fee & Mason Fig. 366 or anchor bolts. Installation shall be as recommended by the manufacturer. Embedded parts shall be built into forms and embedded directly in cast-in-place concrete or grouted into blockouts, Grouting shall be as specified in Division 4.

15C.02 Butterfly Valves Larger Than 6 Inches

Butterfly valves shall be Pratt Goundhog line size Class 150 butterfly valves with buried service manual operators conforming to AWWA C504-74 with the following additional requirements.

1. Valve shafts material shall be stainless steel Type 302, 303, 304 316 or Monel.

2. Rubber seat thickness shall be in accordance with Table 4 in AWWA c504-70.

3. Valve discs shall be alloy cast iron (conforming to ASTM A-436, Type 1 or2, or ASTM A-439 Type D2, with a maximum lead content of 0.003 percent) or stainless steel ASTM A-276 Type 304 or 316.

4. Operators shall have adjustable internal stops.

5. Valves shafts shall be securely attached to the valve discs by means of keys, dowel pins, taper pins or any combination of the three. The connections between the shaft and disc shall be designed to transmit shaft torque equivalent to at least 75% of the torsional strength of the minimum required shaft diameters. Dowels and taper pins shall be mechanically secured.

Buried valves shall be equipped with cast iron slip-type valve boxes and covers, extension stems and Pratt Diviner ground level position indicator. Valve box shall have sufficient overlap to permit a top adjustment 6 in. higher than the present elevations.

Exposed butterfly valves shall be flanged and equipped with cast iron floor boxes and covers, extension stems and Pratt Diviner groundlevel position indicator. Top of floor boxes shall be fastened to adjacent concrete walls with offset pipe clamp equal to Fee & Mason Fig. 366.

15c.03 Butterfly Valves (6 Inches and Smaller)

Butterfly valves shall be PVC rubber seated butterfly valve as manufactured by Celanese Piping Systems with 316 stainless steel shaft, teflon coated top and bottom bearings, O-ring shaft seals, steel lever and operator assembly. Shaft shall be square through the disc body. Lever and operator assembly shall be equipped with device for holding valve in open, closed or throttled positions. All PVC to be ASTM D1784 Type I, Grade 1 material .

15c.04 Ball Valves

Ball valves shall be single union PVC ball valves as manufactured by Celanese Piping Systems with teflon ball seats, O-ring seals on stems, O-ring seals between end connectors and carriers, O-ring seals between valve bodies and carriers. All PVC to be ASTM D1784 Type I, Grade 1 material.

15c.05 Gate Valves

Gate valves shall be equal to M&H NRS-Style 67 with bronze mounted cast iron body, cast iron discs with bronze seats, bronze stem, 2 in. square operating nut, double O-ring stem seals, cast iron slip-type valve boxes and covers, extension stems to place 2 in. square operating nut 3 in. below the box covers. Valve box shall have sufficient overlap to permit top adjustments 6 in. higher than present elevations.

15C.06 Valve Wrenches

Valve wrenches (two required) shall be T handle socket wrench to fit 2 in. square nut as made by M & H Division of Dresser Manufacting. Stems shall be 4 ft. long.

15D. TESTING

Flush all piping until clean. Test piping as a system or in sections.

Furnish all necessary pumps, valves, gauges, meters and labor for all testing. Notify inspector in writing 3 days in advance of test. Repair any leaks and re-test. Dispose of surplus water from testing. Tests of piping in the ground shall be made with the pipe backfilled to a depth of 12 in. with all joints and couplings left exposed for inspection. Concrete thrust blocks shall have cured for a minimum of 24 hours before testing. All tests shall be made for a minimum of 4 hours with water or as indicated. Allow a minimum of 24 hours after filling system for natural absorption before starting tests. Clean up after testing.

PIPING TEST SCHEDULE

System	Test Pressure	Results
Supply Pipes (Not buried)	25 psig	No loss in pressure or visible leaks.
Supply Pipes (buried)	25 psig	Leakage not to exceed 1-1/2 gal. per in. of diameter per 100 ft. in 24 hours. No visible leaks
*Drain Pipes	Fill to highest point	Leakage not to exceed 5 gals. per in. of diameter per 100 ft. in 24 hours. No visible leaks.

* In lieu of this method, the Air Test Method published by International Pipe andceramics (Interpace) in their bulletin "Procedure for Leak Locating With Low Pressure Air: may be used.

TECHNICAL SPECIFICATIONS

DIVISION 1. GENERAL REQUIREMENTS

1A. SUMMARY OF WORK

1A.01 Description of Work

The work to be performed under this contract consists of furnishing all labor, equipment, materials and supplies required to construct a hatchery building, rearing ponds, spawning and holding structure, two water control structures, two water intake structures, effluent settling pond and supply and drain pipe.

1A.02 Location of Work

All work to be performed is at Bonifer Springs Hatchery on the Umatilla Indian Reservation near Pendleton, Oregon.

1A.03 Inquiries

Questions regarding the work should be directed to _____

_____

_____

1A.04 Applicable Codes

In instances where these specifications do not state exact materials or methods of construction, the applicable minimum requirements of the Uniform Building Code, 1979 edition shall govern.

1A.05 Engineering Services

The Engineer will furnish the Contractor with all necessary information relating to elevations and control points. From these elevations and control points, the Contractor shall furnish and place all additional stakes, marks and templates required for the performance and completion of the work. If any Government-established reference point or bench mark is disturbed or destroyed, the Contractor shall replace it to the original line and grade at his own expense.

1B. CONTRACT DOCUMENTS

1B.01 Drawings

The following drawings are hereby made a part of this invitation by reference:

Drawing No.	Title	Sheet Number
1F-MIX-248-1.0	SITE MAPS	1 of 9
1F-MISC-248-2.0	PLOT PLAN	2 of 9
1F-MISC-248-3.0	#3 SPRING INTAKE	3 of 9
1F-MISC-248-4.0	#1 SPRING INTAKE	4 of 9
1F-MISC-248-5.0	HOLDING/SPAWNING FACILITY	5 of 9
1F-MISC-248-6.0	WATER CONTROL STRUCTURES	6 of 9
1F-MISC-248-7.0	INTAKE MISC. METALS	7 of 9
1F-MISC-248-8.0	HATCHERY BLDG. & DETAILS	8 of 9
1F-MISC-248-9.0	MISC. STRUCTURES & DETAILS	9 of 9

18.02 Coordination of Documents Governing the Work

a. The standard Government forms, specifications, associated plans, general and supplemental provisions, and supplemental agreements, made a part of the contract are essential parts thereof and the requirements in one are as binding as though contained in all. They are intended to be mutually supplementary to describe and provide for a complete work.

b. All discrepancies in the drawings shall be brought to the attention of the Engineer for resolution. Blueprints shall not be scaled to obtain missing or conflicting dimensions. The Contractor shall keep a check on dimensions and details as the work progresses and any errors or discrepancies discovered shall be promptly reported to the Engineer.

c. In cases of conflict between plans, specifications, special provisions, supplemental agreements and provisions of Standard Government Forms, the provisions of Standard Government Forms shall govern. In all cases of dispute in respect to such conflict or as to what part or parts of the specifications apply to any given parts of the work, decisions shall be made by the Contracting Officer.

lB.03 Copies of Drawings and Specifications

a. When reduced size drawings are furnished with the Invitation for Bids, 2 sets of full size prints will be furnished by the Contracting Officer at the request of Bidders.

b. Full size prints shall be used for construction. The Contractor will be furnished with a reasonable number of additional copies of the drawings and specifications he may require to carry on the work in a satisfactory manner.

1 C. SUBMITTALS

lC.01 Equipment, Materials and Components

a. All equipment, materials and components furnished by the Contractor shall be stock models for which parts are readily available and shall be products which shall have performed satisfactorily in an installation independent of the manufacturer's facilities for a consecutive period of not less than 2 years as of the date of the bid opening.

b. Any item which the Contractor proposes to furnish as equal to item specified shall be submitted for approval following the instructions below.

lC.02 Submittal Procedure

a. All submittals shall be made utilizing the Government furnished Submittal Form Rl-67 which shall be used as the document for approving or disapproving the material. Written approval must be obtained from the Government before items are installed. Submittals not in accordance with the plans and specifications shall be accompanied by a written statement indicating in detail all parts which deviate from the plans and specifications.

b. All submittals shall be made to the Engineer by the Contractor only. Submittals received by the Engineer without the Contractor's signature

shall be returned to the Contractor without action.

c. Literature, shop drawings, etc., fully describing the items which the Contractor proposes to install shall be submitted in 5 copies. Material or finish samples shall be submitted in 3 sets. Items submitted shall be plainly marked to indicate which options, models, etc. are proposed.

1C.03 Required Submittals

a. Construction Schedule. The Contractor shall furnish the Engineer his proposed work schedule within 15 days after award of contract. He shall also advise the Engineer of revisions of the schedule as modifications may become necessary, or as may be required after commencement of work. Such outlines and revisions shall be in sufficient detail to enable the Engineer to judge as to the adequacy of the Contractor's operations and to anticipate such conditions as may tend to impair or retard the progress and completion of the work.

b. The Contractor shall send submittals for the following items to the Regional Engineer for approval prior to installation:

Concrete Material	Misc. Metals
Doors	Piping Layout and Materials
Embedded Metals Items	Rearing Ponds
Fencing	Rebar Schedule & Placement Drawing
Grating	Hardware
Incubators	Slide Gates
Metal Building	Valves
Windows	Hatching Troughs
Water Closet	

1D. CONSTRUCTION SUPPORT

1D.01 Utility Services and Construction Support Facilities

The Contractor shall furnish all facilities and utilities needed for his operations under this contract, including all temporary heat, light, power, water, telephone, sanitary facilities and job offices and shops.

1D.02 Access to Site

Access to the work from existing roads shall be provided by the Contractor at his own expense. The Government assumes no responsibility for the condition or maintenance of any road or structure thereon that may be used by the Contractor in performing the work under these specifications or in traveling to and from the site of the work. No payment will be made to the Contractor by the Government for any work done in improving, repairing, or maintaining any road or structure thereon for use in the performance of the work under these specifications. Roads subject to interference by the work shall be kept open.

1D.03 Protection of Property-

The Contractor shall not enter upon private property for any purpose without first obtaining permission from the owner or his duly authorized representative, shall be responsible for the preservation of all public and private property along and adjacent to work contemplated under the contract, and shall use every precaution necessary to prevent damage or

injury thereto. He shall exercise due care in preventing, and shall be responsible for damages to structures of all kinds, whether owned by the Government or privately, and shall protect from disturbance or damage all land monuments until they have been properly referenced by the Engineer.

1D.04 Rights of Way

The sites necessary for the installation of machinery, camp grounds, and works to be constructed, and for Government furnished borrow pits, required channels, ditches and spoil banks, will be provided by the Government. Days under which work is prevented by failure to furnish necessary right of way under the initial sentence of this paragraph will not be counted against the Contractor as delay in completion of the contract, and the time stipulated for completion of work will be increased by the number of calendar days of any delay so caused. In event of failure to obtain right of way for all or any portion of the work by the time construction has progressed thereto, the Contracting Officer shall have the right to omit such work or portion of such work.

1D.05 Operations and Storage Areas

All operations of the Contractor (including storage of materials) upon Government premises shall be confined to areas authorized or approved by the Contracting Officer. Government premises adjacent to the construction will be made available for use by the Contractor without cost whenever such use will not interfere with other Government uses or purposes. The Contractor shall be liable for any and all damages caused by him to such Government premises and shall at all times protect and preserve all materials, supplies, and equipment of every description and all work performed,

1D.06 Protection of Environment

a. All contract operations shall be conducted within compliance of all federal, state and local environmental laws and regulations. This condition applies to, but is not limited to, laws and regulations governing noise levels and air and water quality standards.

b. If the Contractor fails or refuses to promptly comply with the requirements of subparagraph above, the Contracting Officer or his authorized representative, shall notify the Contractor of any noncompliance and indicate to the Contractor the action to be taken. The Contractor shall, after receipt of such notice, immediately correct the conditions to which attention has been directed. Such notice, either oral or written, when served on the Contractor or his representative(s) at the site of the work, shall be deemed sufficient.

c. In the event the Contractor fails or refuses to promptly comply with the compliance directive issued under subparagraph above, the Contracting Officer may issue an order to suspend all or any part of the work.

d. When satisfactory corrective action is taken, an order to resume work will be issued. The Contractor shall not be entitled to any extension of time, nor to any claim for damage or to excess costs by reason of either the directive or the suspension order.

1D.07 Additional Safety Requirement

In addition to the Safety and Health requirements of the General Provisions, Clause 37, roll-over protection and seat belts required by 29 CFR 1926 shall be extended to include equipment regardless of year of manufacture.

1E. CONTRACT ADMINISTRATION

1E.01 Authority of the Engineer

a. The Engineer, as the Contracting Officer's representative, shall decide any and all questions which may arise as to the quality and acceptability of materials furnished and work performed, the manner of performance and the rate of progress, interpretation of the plans and specifications, and acceptable fulfillment of the terms of the contract.

b. The Engineer may suspend the work by written order only for such period or periods as are necessary because of extended unsuitable weather or for such other site conditions as may be unfavorable for the prosecution of the work. Upon suspension the work shall be put in satisfactory condition and properly protected,, as directed by the Engineer. The work shall not be resumed until permitted by written order of the Engineer. Extensions of time will be allowed as provided in Clause 5(d) of the General Provisions of Standard Form 23A or 2(b) of Standard Form 19, whichever is applicable, however, no additional compensation or adjustment in contract price will be allowed by reason of this work suspension. This extension of time shall not release the Contractor and his sureties from their general obligations under the contract and performance bond.

1E.02 Authority of Inspectors

a. Inspectors employed by the Government will assist the Engineer in making all necessary inspections and measurements and will enforce a strict compliance with the terms of the contract and the orders of the Engineer. No decisions or instructions of an Inspector will at any time relieve the Contractor from the responsibility of complying fully with all the requirements of the contract. In cases of difference arising between an Inspector and the Contractor or his agent, appeal shall be taken to the Engineer.

b. Inspectors are not authorized to waive or alter in any respect any of the terms or requirements of the contract, to make additional requirements, to grant extensions of time or delays, or to waive forfeitures, The. Contractor shall not be entitled to payment for any work improperly performed with or without an Inspector’s approval.

1E.03 Performance of Work by Contractor

a. The Contractor's procedure and methods of construction may, in general, be of his own choosing, provided they follow best general practice and are calculated to secure results which will satisfy the requirements of these specifications.

b. The Contractor shall furnish the Engineer all reasonable facilities for obtaining such information as he may desire respecting the character of the materials and the progress of the work. The Contractor shall furnish information to include the number of men employed, their pay, the time they worked, and other elements of cost at the request of the Engineer.

1E.04 Payments

Payments for work performed by the Contractor shall be made in accordance with the provisions of Clause 7 of the General Provisions of Standard Form 23A or Clause 6 of Standard Form 19, whichever is applicable.

1E.05 Payments for Change Orders

a. Payments for work performed under any change order or extra work order issued pursuant to the provisions of Section 3 of the General Provisions, will be made on the basis of unit prices stated in the contract where applicable. Whenever the schedule of unit prices in the contract does not apply to any items authorized and directed in a change order such items of work shall be paid for at a price agreed upon in writing between the parties to the contract before such work is done, or, in the event of failure of the parties to agree, on the basis of force account in the following manner:

(1) For all labor, and foremen in direct charge of the specified operation, the Contractor shall receive the current local rate of wage and the cost of the employer's liability insurance, social security taxes, etc., to be agreed upon in writing before starting the work, to which shall be added an amount equal to 15 percent of the sum thereof. No allowance shall be made for general superintendence and the use of small tools and ordinary equipment.

(2) For all materials used, the Contractor shall receive the actual cost of such materials, including transportation charges, to which cost shall be added a sum equal to 15 percent thereof.

(3) For any machine-power tools or special equipment, including pertinent fuel and lubricants, which it may be deemed necessary or desirable to use, the Contracting Officer shall allow the Contractor a reasonable rental price, to be agreed upon in writing before any work is begun, for the time that such tools or equipment are in use on the work, and to which sum no percentage shall be added.,

b. The compensation as herein provided shall be received by the Contractor as payment for work done on a force-account basis. The Contractor's representative and the Inspector shall compare records of work done on a force-account basis at the end of each day. Copies of these reports shall be made upon suitable forms provided for this purpose, and signed by both the Inspector and the Contractor's representative, one copy being forwarded to the Engineer and one to the Contractor. All claims for work done on a force-account basis shall be submitted to the Engineer by the Contractor upon certified statements, and such statements shall be filed not later than the tenth day of the month following that in which the work was actually performed,

1F. CONTRACT COMPLETION

1F.01 Cleaning Up

a. Rubbish shall not be allowed to accumulate on the site and the Contractor shall collect and remove, from time to time, such rubbish and debris incident to the execution of the contract as, in the opinion of the Engineer may be undesirable or disfiguring on the premises.

b. Upon completion of the work, the Contractor shall remove from the vicinity thereof all plant, buildings, unused materials, concrete forms, rubbish, and other materials belonging to him or used under his direction during construction, sweep the floors broom clean, clean all window lights, etc., as may be required by the Engineer, and in case of his failure to do so, the same may be removed by the Government at the expense of the Contractor and the Contractor and his surety shall be liable therefor.

1F.02 Final Inspection

The Contractor shall notify the Engineer at least 10 days prior to the anticipated date of completion of all work specified in the contract. Upon completion of the work, the Engineer shall proceed with final inspection and shall complete such inspection as promptly as practicable. The time required for such inspection and the making of any corrections as a result thereof shall be included in the contract performance time.

1F.03 Acceptance and Final Payment

Final acceptance is the allowance of final estimates by the Contracting Officer. The Engineer shall certify to the Contracting Officer that the contract is complete and include the amount of the final payment due the Contractor. All progress or partial payments made prior to the final payment are subject to correction in the final estimate and payment.

1F.04 Release of Claims

After completion of work, and prior to final payment, the Contractor shall furnish to the Contracting Officer a release of claims Form DI-137, properly executed by the Contractor, against the United States arising out of the contract, other than claims specifically excepted from the operation of the release.

1F.05 Termination of Responsibility of Contractor

The contract shall be considered as completed after all work contemplated therein has been accepted and final estimates therefore have been allowed and paid, and the Contractor shall be considered as released from all further obligations and responsibility thereunder except as to the conditions and requirements set forth in the performance bond and payment bond.

DIVISION 2. SITE WORK

2A. DEMOLITION AND REMOVAL OF EXISTING STRUCTURES

2A.01 General

Existing structures to be demolished and/or removed include a two old buildings and a corral. All structures not designated to be removed shall remain and be protected by the Contractor. Any damage to the structures to remain shall be repaired by the Contractor at no additional cost to the Government. All materials resulting from demolition shall become the property of the Contractor and shall be removed from the site. Broken concrete may be used as riprap as specified in Division 26 or may be used as fill material as specified in Division 20.01.

2A.02 Limits of Removal

2A.02a. BELOW ROADS AND PARKING AREAS

All concrete and timber to be removed which is not more than 2 ft. below subgrade elevation shall be removed. Subgrade elevation is defined as the bottom of the gravel surfacing.

2A.02b. BELOW LANDSCAPED AND UNSURFACED AREAS

All concrete and timber to be removed which is not more than 12 in. below finished grade shall be removed.

2A.02~. BELOW NEW STRUCTURES AND PIPELINES

All concrete and timber to be removed which is not more than 6 in. below the bottom surface of the structure or pipe shall be removed.

2A.02d. BESIDE NEW STRUCTURES AND PIPELINES

All concrete and timber to be removed which is within 2 ft. of the structure or pipe shall be removed.

2B. CLEARING AND GRUBBING

2B.01 General

All trees with trunk diameter 6 in. or more in diameter shall be saved unless specifically designated for removal. All debris resulting from clearing and grubbing shall be burned or disposed of off the site. Burying of the debris will not be allowed. All trees and shrubs outside the limits of clearing and grubbing designated below shall be protected from damaged by the Contractor.

28.02 Limits of Clearing and Grubbing

2B.02a. SURFACED AREAS

All areas to be surfaced and within 2 ft. of the surface edge shall be

cleared and grubbed of all trees, shrubs, stumps, roots and other perishable matter except sound undisturbed stumps and roots may remain as permitted in Division 2B.02b.

2B.02b. FILLED AREAS

All areas to receive more than 6 in. of fill shall be cleared and grubbed of all trees, shrubs, stumps, roots and other perishable matter except sound undisturbed stumps and roots that will be more than 3 ft. below the slope of embankments or subgrade may remain. Subgrade is defined as the bottom of the gravel base or concrete.

2B.02c. BUILDINGS AND STRUCTURES

All areas within 5 ft. of new buildings and structures shall be cleared and grubbed of all trees, shrubs, stumps, roots and other perishable matter except trees and shrubs designated to remain. Sound undisturbed stumps and roots may remain as permitted in Division 2B.02b.

2B.02d. PIPELINES

All areas within 2 ft. on either side of the outside of pipelines shall be cleared and grubbed of all trees, shrubs, stumps, roots and other perishable matter. Where pipelines are to be placed in filled areas, sound undisturbed stumps may remain as permitted in Division 2B.02b provided they are cut off 6 inches or more below the bottom of the pipe.

2c. EXCAVATION

2c.01 General

The Contractor shall perform all excavation, grading and compacting necessary for and properly incidental to the completion of the work.

The Contractor shall be responsible for dewatering work areas and no extra payment will be made for water encountered in any excavation or other work area. Water removed from the excavations and other work areas shall not be allowed to flow into the creek if it will increase the turbidity in the creek.

Material obtained from excavation which meets the fill and backfill specifications shall be used in the required fills and backfills. Excess and/or unsuitable material shall be removed from the site or disposed of in the areas designated by the Government.

2c.02 Structural Excavation

Structural excavations include excavations required for footings, slabs and manholes.

The bottom of excavations shall be within plus or minus 0.1 ft. of the elevations shown on the drawings.

The bottom of all strucural excavations shall be cleaned to remove all rocks over 1 in. diameter and loosened soil. Cleaning shall be accomplished

immediately prior to placing gravel base or concrete. Gravel base where required shall be as specified for pipe bedding in Division 2D.02a.

Excavations carried below the required depths shall be refilled with gravel base material, placed and compacted all as specified for structural fill and backfill in Division 2D.03.

2C.03 Trench Excavation

This section is applicable to excavations required for the placement of all underground pipes, conduits and cables.

The trench shall be excavated to permit placement of the pipe, conduit, or cable to the alignment and grade shown on the drawings or specified. Excavation depth shall include an allowance for the required bedding and the trench bottom shall be cleaned of all loosened soil and rocks. The shape and dimension of the trench shall be as shown. Where not shown the shape and dimension of the trench shall afford at least 1 ft. on each side of pipes 3 in. to and including pipes 36 in. diameter, and 2 ft. total width of pipes smaller than 3 in., for doing all necessary work around and beneath the pipe, for inspection after laying and for thoroughly tamping the backfill without injury to the pipe or coating. If, without written authorization, the pipe trench is excavated below the required depth, it shall be backfilled at the Contractor's expense with bedding material specified in Division 2D.02a.

The Contractor shall provide shoring, signs, barricades, etc., in accordance with OSHA (Occupational Safety and Health Standards), and shall maintain traffic where trenches cross roads.

2C.04 Other Excavations

Other excavations include all excavations required to construct roads, parking areas, ditches, etc. The bottom of these excavations shall be within plus 0.1 ft. of the elevations shown with an allowance for the required surfacing material.

2D. FILLING AND BACKFILLING

2D.01 General

References in these specifications to percentages of the maximum density are percentages of the maximum density as defined and determined by AASHTO T180, Method D. All materials requiring compaction to minimum densities expressed as a percentage of the relative maximum density shall be tested in accordance with AASHTO T180, Method D. Tests shall be run by an independent testing laboratory selected by the Contractor and approved by the Engineer. The Contractor shall pay all costs for testing.

All fill and backfill shall be placed only in the presence of the Inspector. Fill and backfill material shall be earth or gravelly material free of refuse, vegetable matter or roots over 1 in. in diameter and rocks over 6 in. in diameter except larger rocks will be permitted in the deep

fills when placed as specified below for broken concrete. All temporary planking, timber, etc., shall be removed as the backfill is placed. All fill and backfill (except Pipeline Backfill and Structural Fill and Backfill, found in Division 2D.02 and 2D.03, respectively) shall be placed in layers not exceeding 12 in. loose depth. Before adding succeeding layers, each layer shall be compacted to a minimum density of 85% relative maximum density. Broken concrete shall have all rebars cut reasonably flush and shall be placed in the fill areas in a manner that will allow compaction of soil, around the concrete pieces. No broken concrete shall be placed within 12 in. of subgrade.

2D.02 Pipeline Backfill

2D.02a. GENERAL

The word pipeline shall include all underground pipes, conduits and cables.

Trenches shall not be backfilled until the Inspector has determined that installation and testing requirements have been met. Backfill shall be brought up evenly on both sides of the pipe to avoid lateral displacement of the pipe or damage to the joints. Insofar as permitted by Division 15D. TESTING, pipelines shall be backfilled on the same day the pipe is laid to prevent displacement.

All pipelines shall be bedded. Minimum thickness of the bedding layer under the pipelines shall be 6 in. Bedding material shall be furnished by the Contractor and shall meet the following gradation.

Screen or Sieve Size	Percent Passing by Weight
l-l/2 in.	100
1/2 in.	Not less than 40
No. 100	Not more than 10

In addition to meeting the above gradation, all bedding for plastic pipe, asbestos cement pipe (except perforated asbestos cement pipe), direct burial cable and coated and wrapped steel pipe shall pass a l/4 in. sieve.

The Contractor may use excavated material for bedding if it meets the aforementioned gradation or he may at his option process excavated material to meet the required gradation.

Backfill shall be placed only in the presence of the Inspector. Compaction of pipeline backfill to 1 ft. over the top of the pipes shall be with hand-operated compaction equipment.

Material as specified for bedding shall be placed along both sides of the pipe in layers not exceeding 6 in. loose depth. Before placing succeeding layers, each layer shall be compacted to the minimum density of 85% relative maximum density. Backfilling and compacting in 6 in. layers shall continue until 1 ft. of cover has been placed over the top of the pipe. Remaining backfill may be placed in accordance with Division 2D.01. Backfilling with bedding material will be required to

1 ft. over the top of coated and wrapped steel pipes, plastic pipes, asbestos cement pipes and direct burial cables and to the springline for all other pipes. Backfill material from the springline to 1 ft. over the top of pipes other than plastic, coated and wrapped steel pipe, asbestos cement pipe and direct burial cable shall be granular material free of rocks over 2 in. in diameter.

2D.02b. PIPELINES UNDER CONCRETE SLABS

Material as specified for bedding in Division 2D.02a shall be placed along both sides of the pipe in layers not exceeding 6 in. Before placing succeeding layers, each layer shall be compacted to a minimum density of 90% relative maximum density. Backfilling with bedding material shall be extended to the top of the pipeline excavation.

2D.02c. PIPELINES PASSING BELOW OTHER PIPELINES

Pipelines passing below other pipelines shall be backfilled as specified for "Pipelines Under Concrete Slabs". Any backfill below a slope of 2:1 (horizontal to vertical), drawn from the top of the upper pipe, shall be considered as being below the upper pipe.

2D.02d. PIPELINES UNDER BLACKTOPPED AND GRAVEL SURFACED AREAS

Material as specified for bedding and backfill shall be placed and compacted as specified Division 2D.02a except that all backfill shall be placed and compacted to 90% relative maximum density. Placing and compacting shall be done in 6 in. layers.

2D.03 Structural Fill and Backfill

All fill and backfill within 3 ft. of all structures and buildings shall be defined as structural fill or backfill. Structural fill and backfill material shall be as specified in Division 2D.01. Structural fill and backfill shall be placed in layers not exceeding 6 in. loose depth. Before adding succeeding layers, each layer shall be compacted to the minimum density of 95% relative maximum density. Compaction of structural fill and backfill shall be with hand-operated compaction equipment.

Where backfill is to be placed against both sides of concrete walls, the backfill shall be brought up evenly on both sides of the wall.

No backfill shall be placed against one side of concrete walls until the concrete has developed sufficient strength to resist the loading imposed by the backfill. Any abutting concrete walls or beams shall also have attained sufficient strength. In any case, the backfill placement shall not exceed the following schedule:

Age of Concrete	Backfill Depth
72 hours	1/3 wall height
7 days	2/3 wall height
21 days	Full wall height

Any deviations from this schedule must be approved in writing by the Engineer.

2E. CULVERTS AND RISERS

2E.01 Materials

2E.Ola. CORRUGATED METAL PIPE AND COUPLINGS

Corrugated metal pipes shall be size, gage and length shown on the drawings. Pipe shall be in accordance with AASHTO M-36 bituminous coated in accordance with AASHTO M-190, Type A. Bituminous coating is not required for couplings.

2E.Olb.. CORRUGATED STEEL FLASHBOARD RISERS

Zinc and bituminous coated Type II corrugated steel pipe flashboard riser with l/2 in. by 2-l/4 in. to 2-3/4 in. annular corrugations, Class I, Series A, Shape 1, Coating A, conforming to Federal Specifications WW-P-405B dated June 14, 1974 with Amendment 1 dated May 8, 1976 complete with zinc and bituminous coated steel bottom plate, flashboard guides and braces, packaging and packing level C. Structural steel shall be galvanized or black painted with two coats of zinc dust - zinc oxide primer prior to application of the bituminous coating. The stub invert shall be a maximum of 3 in. above the bottom of the riser and flashboard guides. The bottom of the riser is to be capped with a 10 gauge flat plate. Flashboard guides to be full height and across the bottom as detailed, except that riser diameters greater than 48 in. shall also have a center flashboard guide. 2 in. x 2-l/4 in. angles shall be welded to the top and midpoint (midpoint brace not required for risers under 6 ft. in height) of the riser guides for bracing to provide approximately 3 in. clearance between the brace and the stop log guides.

2E.02 Installation

Excavation shall be inaccordance with Division 2C and bedding, backfill and fill shall be in accordance with Division D.

2F. PILING

Sheet piling shall be lightweight 12 gage galvanized steel sheet piling with minimum section modulus of 1.7 in. per ft. of width equal to Armco Metric Sheeting.

Salvaged steel piling may be used provided it meets the following requirements: (1) pieces shall be straight; (2) interlocking joint edges shall be intact; (3) minimum thickness of sound uncorroded metal shall be 12 gauge (0.1046 in.) measured at bottom of rust or pitting, bright metal and bright metal surfaces; (4) without holes, welded patches will be permitted; and (5) full length or welded splices only for driving depth required. Sheet piling may be furnished in more than one pattern provided interlocking edges are compatible.

Piling shall be driven with a drop hammer, pneumatic or steam pile driver by progressive driving taking care to protect the top. Misalignment of piling shall not exceed six inches from true line as shown on the drawings. Piling outside the alignment limits shall be withdrawn and redriven within alignment limits. Concrete slabs shall be enlarged

where necessary to provide minimum concrete thickness of 4 in. outside piling. In all cases, the piling shall be driven to the depth shown or deeper.

In lieu of sheet piling, 6 in. thick concrete cutoff walls may be placed at the Contractor's option. The wall shall be to the depths shown for piling, reinforced with No. 4 rebar 12 in. on center each way. Concrete shall be in accordance with Division 3. Concrete.

2G. RIPRAP

Riprap stone shall be hard and durable and shall weigh not less than 155 lbs. per cu. ft. (specific gravity not less than 2.5). Soft or disintegrated rock will not be allowed. Riprap shall consist of individual stones weighing more than 25 lbs. and at least 50% weighing not less than 100 lbs. each.

The Contractor may obtain riprap material from required excavations, or other approved source.

Riprap layer shall be to the thickness shown. Riprap shall be placed by dropping the rocks into place and shall be arranged so that rock sizes are intermixed using the small sizes to fill the spaces between the larger stones.

2H. GRADING AND SURFACING

2H.01 Grading,

All areas to be filled or excavated shall be graded to the finished contours shown within a tolerance of 0.1 ft. and with an allowance for the thickness of the surfacing materials. Edges of graded areas shall be blended to adjacent contours. Disposal areas shall be graded smooth, sloped to drain and blended to adjacent contours.

2H.02 Surfacing

All disturbed areas with an existing gravel surface and all areas to receive new surfacing shall be surfaced with a 9 in. layer of Aggregate for Aggregate Subbase meeting the requirements in Section 703.06 and a 6 in, layer of Aggregate for Aggregate Base meeting the requirements in Section 703.07, Size 1" - 0 of the Oregon Standard Specifications for Highway Construction.

21. CHAIN LINK FENCE

21.01 General

Work in this division includes construction of approximately'575 ft. of chain link fence with 1 gate 30 ft. wide, 1 gate 20 ft. wide, 1 gate 12 ft. wide and 1 gate 3 ft. wide. Fence shall be equal to USS Cyclone Invincible, with 3 rows of barbed wire. Fence shall be 6 ft. high (not

including the barbed wire). Shop drawings showing all material and installation details shall be submitted for approval before ordering any materials.

21.02 Materials

2I.02a. CHAIN LINK FABRIC

Fabric shall be 9 gauge, 2 inch mesh galvanized coated steel per ASTM A-392 1.2 ounce coating. Tensile strength to be 80,000 psi minimum. Top of fabric shall have twisted and barbed selvages.

2I.02b. BARBED WIRE

Barbed wire shall be two strands of twisted 12-l/2 gauge steel with 4 point barbs on 5 inch centers. Coating .30 ounce aluminum or Class 3 Zinc per ASTM A-121.

2I.02c. BOTTOM TENSION WIRE

Bottom tension wire shall be 7 gauge coil spring wire with Class 3 Zinc coating (.80 ounce per square feet of wire surface).

2I.02d. TOP AND BRACE RAILS

Rails shall be l-1/2 in. schedule 40 galvanized seamless steel pipe complying with ASTM A-120 or l-5/8 in. by l-1/4 in. roll formed section with minimum yeild stress of 45,000 psi and a minimum section modulus of .165 in.^{3}. Rails to have 2 ounce zinc coating PSF of surface.

2I.02e. LINE POSTS

Posts shall be 2 in. schedule 40 galvanized seamless steel pipe complying with ASTM A-120 or l-7/8 in. by l-5/8 in. roll formed "C" section with minimum yeild stress of 45,000 psi and a minimum section modulus of ,395 in.^{3} perpendicular to fence lines. Posts to have a 2 ounce zinc coating PSF of surface.

2I.02f. END, CORNER, AND PULL POSTS

Posts shall be 2-l/2 in. schedule 40 galvanized seamless steel pipe complying with ASTM A-120 or 3-l/2 in. by 3-l/2 in. roll formed section with minimum yeild stress of 35,000 psi and minimum section modulus of 1,000 in.^{3}. Posts for swing gates shall be in accordance with the following gate leaf widths:

Up to 6'	- 2-l/2 in. schedule 40 galvanized seamless steel pipe or 3-l/2 x 3-l/2 roll formed section as specified above.
Over 6' to 13'	- 3-l/2 in. schedule 40 galvanized seamless steel Pipe.
Over 13' to 18'	- 6 in. schedule 40 galvanized seamless steel pipe.
Over 18'	- 8 in. schedule 40 galvanized seamless steel pipe.

2I.029. ACCESSORIES

All accessories except tie wires shall be galvanized to comply with ASTM A-153.

Post tops shall be pressed steel or malleable iron, designed as weather-tight closure caps and to permit the passage of top rail.

Stretcher bars shall be one piece lengths equal to full height of fence fabric with a minimum cross-section of 3/16 in. by 3/4 in. Provide one stretcher bar for each gate and end post and two for each corner or pull post. In lieu of stretcher bars posts may be equipped with integral lock loops formed in the post.

Stretcher bar bands shall be heavy pressed steel or malleable iron spaced not over 15 in. on center with no less than 6 bands per stretcher bar.

Wire ties for tying fabric to line posts and top rail shall be 9 gage aluminum or galvanized steel. Tie spacing shall be 14 in. on center for posts and 24 in. on center for top rail. For tying fabric to tension wire, use 11 gage galvanized hog rings spaced 24 in. on center.

2I.02h. GATES

All gates more than 3 ft. wide shall be double leaf type. Gate frames shall be fabricated from l-1/2 in. galvanized seamless steel pipe complying with ASTM A-120. Additional horizontal, vertical and diagonal members shall be provided to ensure proper gate operation, prevent sag and for attachment of fabric, hardware and accessories.

Gate fabric shall be same as fence fabric. Vertical edges shall be fastened to frame as specified for the fence posts. Top and bottom edges shall be fastened to frame as specified for top rail of fence.

Gate hardware shall be malleable iron or pressed steel galvanized in compliance with ASTM A-153. Hinges shall be non-lift-off-type offset to permit 180° opening. Stops shall be provided for all double leaf gates consisting of a flush plate with anchors set in concrete to engage the center drop rod or plunger bar. Provide a locking device with padlock eyes as an integral part of the latch. Padlock eyes on double leaf gates shall be designed to lock both leaves with one padlock. All gate leaves shall be equipped with keepers to hold the gates in the open position until manually released.

2I.02i. CONCRETE

Concrete shall comply with Division 3 of these specifications.

21.03 Installation

Fence installation shall not begin until completion of all grading. Maximum post spacing shall be 10 ft. Post holes shall have minimum diameter of 9 inches and a minimum depth of 3-l/2 ft. with bottom of posts set 3 ft. below ground surface. Posts shall be set plumb and in

proper alignment and grade. Posts shall be held in position during placing and finishing of concrete. Place concrete around posts in a continuous pour and tamp for consolidation. Trowel finish tops of post footings and slope or dome to direct water away from posts. Extend concrete for gate posts to underside of bottom hinge. Set keepers, stops and other accessories into concrete as required.

Install fabric on outside of framing with approximately 2 inches between finish grade and bottom of selvage.

Fabric shall be stretched and anchored to framework so that fabric remains in tension after pulling force is released.

Gates shall be installed plumb and level with hardware adjusted for smooth operation and lubricated where necessary. Ground set items shall be set in concrete as recommended by the manufacturer and to a depth of 3-l/2 ft. below finish grade.

Bend ends of all wire ties to minimize hazard to persons or clothing,

Install nuts, tension band and hardware bolts on side of fence opposite fabric side.

DIVISION 3. CONCRETE WORK

3A. SCOPE

This section covers concrete materials, placement, finish and curing. For excavation and backfill requirements see Division 2. Vapor barrier shall be as specified in Division 7.

3B. COMPOSITION

Concrete shall be composed of Portland cement, water, fine and coarse aggregate and an air entraining admixture. Concrete shall contain 5-l/2 sacks of cement per cu. yd. and shall be designed to achieve a minimum of 3,000 psi compressive strength at the age of 28 days. The Contractor shall submit for the Engineer's approval a concrete mixture design certified by an independent testing laboratory for all concrete to be used under this contract.

3C. MATERIALS

3c.01 Cement

Cement shall conform to Federal Specification SS-C-192, Type 11: low alkali. Cement will be accepted on the basis of a manufacturer s mill certificate that the cement furnished meets the physical and chemical requirements of the foregoing specification.

3C.02 Water

Water shall be fresh, clean and free from injurious amounts of sewage, oils, solids, alkali, salt or organic matter. The water content of all cement mixtures shall be the minimum necessary to place the mixture being used. The maximum allowable concrete slump at time of concrete placement shall not exceed 4 in.

3c.03 Aggregates

a. Aggregates shall be clean, hard, tough, durable and shall conform to the requirements of Federal Specification SS-A-281. Aggregates will be rejected if the specific gravity is less than 2.60.

b. Fine aggregate shall consist of natural sand, manufactured sand, or a combination of natural and manufactured sand. It shall be uniformly graded from 0 to No. 4 sieve designation to provide a fineness modulus from 2.5 to 3.0. Fine aggregate will be rejected if: (1) deleterious substances such as shale, clay lumps, mica, loam and soft particles exceed 3% by weight; (2) the portion retained on a No. 50 screen shows a weighted average loss of more than 8% by weight when subjected to 5 cycles of Sodium Sulphate test for soundness or 12% loss when subjected to 5 cycles of Magnesium Sulphate; (3) portion passing a No. 100 sieve is 8% or more by weight; or (4) portion passing a No. 200 sieve is 2% or more by weight.

c. Coarse aggregate shall consist of gravel or crushed stone. It shall be uniformly graded from No. 4 to l-1/2 in. sieve designation (square mesh opening). Coarse aggregate will be rejected if: (1) deleterious

substances such as shale, clay lumps, organic material, soft particles, and material passing No. 200 screen exceed 2% by weight; (2) the L.A. rattler test results in 10% weight loss at 100 revolutions or 40% weight loss at 500 revolutions; (3) the Sodium sulphate test for soundness results in an average weighted loss of more than 10% by weight when subjected to 5 cycles, or 15% loss when subjected to 5 cycles of Magnesium Sulphate; or (4) portion passing a No. 200 sieve is 0.5% or more by weight.

d. The Contractor shall furnish to the Government compliance certification and analysis from an independent testing laboratory for approval of the concrete aggregates to be used. Approval of a source of concrete aggregates is not to be construed as approval of all materials from that source. The right is reserved to reject materials from certain localized areas, zones, strata or channels, when such materials are unsuitable for concrete aggregates as determined by the Engineer.

3c.04 Forms

See Paragraph 3F.Olc for dimensional tolerance.

a. Forms shall be sheathed or lined with plywood or other approved material and shall be true to line and grade. Metal faced or metal pan forms will not be permitted. Form panels shall be clean, free of encrusted grout and coated with a non-staining form oil shortly before concrete is placed. Reinforcing steel and surfaces of construction joints shall be kept clean of form oil and, if necessary, protective coverings may be required during form oiling operations. All oil spots on reinforcing steel and construction joint surfaces shall be removed. Form panels shall be as large as practical to minimize seams and shall not be used when damaged or second ply is exposed on the plywood interior surface. The form shall be substantial and sufficiently tight to prevent leakage of mortar and sufficiently braced and tied so as to maintain specified position and shape.

b. Form ties shall be approved round design or as approved for type of forms used and free from devices that will leave holes or depressions larger than l-l/4 in. diameter and of a type that when forms are removed they shall leave no metal within 1 in. of finished surfaces. Top row of ties shall be between 3 in. and 12 in. of grade.

c. All exposed exterior corners shall be chamfered 3/4 in. to 1 ft. below finish backfill grade.

d. Forms shall be removed after pouring as early as practical in a manner which will prevent injury to the concrete. Unless otherwise directed, forms, falsework and shoring supporting the weight of the concrete as under beams, slabs, large openings, etc., shall be removed within 7 days and all other form work shall be removed within 24 hours after concrete placement. The Engineer reserves the right to have supports and forms left in place up to 21 days under slabs and beams and up to 72 hours for other form work if weather and curing conditions so warrant. No forms or supports shall be left on the walls, under slabs or in the backfill.

3D. BATCHING AND MIXING

Ready-mixed concrete utilizing approved aggregate shall be used. When a truck mixer is used, each batch of concrete shall be mixed not less than 70 nor more than 100 revolutions at the rate of rotation designated by the manufacturer of the equipment as mixing speed. Mixing shall be performed in the presence of the Inspector at the job site. The air content shall be between 3 and 6 percent of the volume of the concrete.

3E. PLACING

a. Concrete shall be placed only in the presence of the Inspector, and only when the air temperature is between 40° and 90°F. The Inspector shall be notified of intent to pour 24 hours before pour is to start. All forming shall be completed prior to inspection by the Inspector and before the concrete is ordered.

b. Adequate cover during expected rainy periods shall be provided for concrete placement protection. Cover materials shall be set up at the job site, ready for installation before concreting is started and shall remain in place until the concrete has set sufficiently to resist any damage to the finish from rainfall.

c. Concrete shall not be placed on a frozen sub-grade or against any surfaces having deposits of frost or ice. See paragraph 36.04 for placing concrete on or against existing concrete.

d. Water shall be removed from within forms and excavations before and during placement of concrete.

e. Concrete shall be conveyed from mixer to forms as rapidly as possible and deposited as near final position as possible by methods which will prevent segregation or loss of ingredients. Freely dropping concrete vertically a distance of more than 5 ft. or depositing a large quantity at any point and running or working the concrete along the forms will not be permitted. Concrete shall be worked into the corners and angles of the forms and around all reinforcement and embedded items without permitting the materials to segregate. Once started, concrete placement shall be carried on as a continuous operation until the placing of the panel or section is completed. Concrete shall be placed within 30 minutes after the cement has been added if transported in nonagitating equipment, or 90 minutes if transported in agitators, unless otherwise authorized.

f. Concrete shall be consolidated with the aid of mechanical vibrating equipment supplemented by hand spading and tamping. Vibrating equipment shall be of the internal type and shall at all times be adequate to properly consolidate all concrete.

3F. FINISHING AND CURING

3F.01 Finishing All Concrete

a. Defective concrete, voids left by the removal of the tie rods, ridges, lips and local bulging on all concrete surfaces shall be repaired immediately after the removal of forms. Unless otherwise authorized by

the Engineer in writing all concrete finishing shall be completed within 48 hours of concrete placement. Voids left by the removal of the tie rods shall be reamed and completely filled with drypacking mortar. Defective concrete shall be repaired by cutting out the unsatisfactory material and replacing with new concrete which shall be secured with keys, dovetails or anchors. All unformed surfaces of concrete shall have a wood float finish, unless otherwise specified, without additional mortar and shall be true to elevation as shown on the drawings. All wall tops shall be steel troweled and edges finished with a 3/8-in. radius edging tool. Every precaution shall be taken by the Contractor to protect the finished surfaces from stains or abrasions. Failure to maintain the concrete finish schedule will be cause for suspension of concrete placement.

b. All concrete slabs and walkways shall be float finished and sloped to indicated grades. Floating may be performed by use of hand or power driven equipment. Floating shall be started as soon as the screeded surface has stiffened sufficiently to produce a uniform surface free from screed marks. Dry topping will not be allowed. A true plane surface shall be provided for a minimum width of 6 in. between all mating flashboard guides. Exposed edges of slabs shall be finished with a 3/8-in. radius edging tool. Additional finishes may be required where noted on the drawings.

c. Irregularities of exposed surfaces shall not exceed l/8 in. for gradual irregularities as measured by a 5 ft. template or l/4 in. for gradual irregularities as measured by a 10 ft. template. Abrupt irregularities will not be permitted. Deviation from line and dimensions shall not exceed l/4 in. for fishrearing and holding ponds and l/2 in. for all other work unless noted otherwise on the drawings. However, the minimum thickness allowed for any structural slab or wall shall be l/4 in. less than dimensioned.

3F.02 Special Finishes (Where noted on the drawings)

a. WALLS AND CURBS (Sack Finish)

Where indicated on the drawings the exposed surfaces shall be stoned or ground to expose air pockets and finished by applying cement mortar with a brush and sacked to give a smooth uniform finish immediately upon form removal. All finish shall extend 12 in. below backfill grade line.

b. SLABS AND WALLS

Troweled Finish - Slabs shall be steel troweled after float finishing as specified above and when concrete is sufficiently hard to prevent excessive amounts of fines and water from working to the surface.

Sufficient pressure shall be applied to the trowel to flatten and smooth the concrete and produce a dense, uniform surface free of blemishes, ripples and trowel marks.

Broom Finish - Slabs and wall tops shall be floated and troweled as specified above and then broomed immediately following steel troweling. The broom shall be of an approved type that will produce regular corrugations

not over l/l6 in. depth. Strokes of the broom shall be made square with the slab, slightly overlapping, continuous from edge to edge of the slab. The finished surface shall be free of porous spots, irregularities, depressions and small pockets.

3F.03 Curing

a. Immediately following the completion of the concrete finish requirements, all concrete surfaces shall be kept wet for a period of not less than 5 days after placing by covering with a water-saturated material or other approved methods.

b. Membrane curing will be permitted only where specifically noted on the drawings. A curing compound conforming to ASTM C-309, Type 2, white pigmented, may be used and shall be applied in two coats immediately following the completion of the concrete finish requirements. In preparation for the curing compound application, the concrete shall be thoroughly saturated with water. Curing compound shall be applied as soon as the surface water has disappeared. The concrete shall be protected from damage at all times. No curing compound will be permitted on surfaces against which concrete or other material will be bonded.

c. In lieu of water curing, an epoxy chlorinated rubber surface sealer and hardener equal to TRI-KOTE 18 may be used. Application rate shall be not less than one gallon for 250 sq. ft. of surface area. Application shall be immediately following finishing at a spray pressure of 30 to 40 p.s.i. Concrete surface shall be kept damp at all times until sealer is applied.

d. During the curing period when there is likelihood of freezing temperatures, suitable and sufficient measures must be provided to maintain all concrete surfaces at a temperature of not less than 550°F for a period of not less than 5 days after concrete placements. All necessary materials for covering or housing must be on the work site before concrete work is started and must be effectively applied or installed. Where artificial heat is employed, special care shall be taken to prevent the concrete from drying by maintaining the curing procedures. All concrete placed in the forms shall have a material temperature range between 40° and 90°F.

3G. EMBEDDED ITEMS (See also Division 5)

3G.01 General

Before placing concrete, care shall be taken to determine that all embedded items are properly positioned, firmly fastened and clean.

36.02 Materials

a. Steel reinforcement shall conform to Federal Specification QQ-S-632 Type II, Class B-40 or B-60. Wire mesh shall conform to Federal Specification RR-W-375. Metal chairs shall be galvanized or plastic coated. Bars and/or wire mesh shall be cut, bent and installed in accordance with the American Concrete Institute Building Code requirements. The Contractor shall submit reinforcing steel shop drawings for review by the Engineer prior to steel fabrication. The Engineer's review will be for shape, size and spacing only.

b. All steel bars shall be furnished in full lengths where possible, except at the base of all concrete walls where 36-bar diameter splices are permitted. Other splices shall have a length of not less than 30 times the nominal diameter of the reinforcement unless otherwise shown and shall be well distributed or else located at points of low tensile stress. Sheets of wire mesh reinforcement shall overlap each other 12 in. and shall be securely fastened at the ends and edges. Size, spacing and quantity of reinforcing bars shall be as shown or noted on the drawings within the following tolerances:

1. Depth, d, in flexural members, walls, columns where d is 24 in. or less: ± l/4 in.

2. Depth, d in flexural members and columns where d is more than 24 in.: ± l/2 in.

3. All other location dimensions: + 2 in., except that specified concrete cover at ends of members shall not be reduced.

Reinforcement shall be held securely by wire, mortar blocks or metal chairs during the pouring of the concrete. In general, all reinforcement shall be securely wired in proper position (alternate bar intersections minimum) and supported before concrete is poured in any section. Special precautions shall be taken to insure that the wire mesh is properly located at all times during the pouring of the concrete. Except as otherwise shown on the drawings, the thickness of concrete over reinforcing bars shall be as follows:

Between main bars and surface of concrete deposited against earth without intervening forms . . . . . 3 in.

Between reinforcing bars more than 5/8 in. diameter and formed concrete surfaces . . . . . 2 in.

Between bars 5/8 in. or less in diameter and formed concrete surfaces . . . . . 1 l/2 in.

Between stirrups and ties and surface concrete . . . . . 1 in.

Between slab bars and top of slab . . . . . .I l/2 in.

Between slab bars and formed bottom of interior building slabs..... . . . . ..lin.

36.03 Waterstop

Waterstop shall be installed only where indicated on the drawings and shall be equal to Servicised Durajoint Type 4 PVC Waterstop, as manufactured by W. R. Grace & Co. Waterstop in walls shall be spliced to waterstops in slabs. All splices and butt joints in the waterstop shall be heat fused as recommended by the waterstop manufacturer.

36.04 Concrete Joints

a. Construction of stop pour joints shall be located only as shown on the drawings and shall be formed with or without shear key and waterstop as detailed. Should the Contractor require other construction joints than shown on the plans, the Contractor shall submit requests for Engineer's approval prior to placing concrete forms. Contraction and expansion joints shall be constructed at the locations shown and to the dimensions as detailed. Reinforcing bars shall not extend through contraction or expansion joints. Premolded joint filler shall be equal to Homex 300 as manufactured by Homasote Co.

b. Concrete joint preparation for additional concrete lifts shall require the hardened concrete face to be roughened and cleaned to remove loosened aggregate particles or damaged concrete. Immediately prior to concrete placement the surface shall be again cleaned, thoroughly wetted and followed by flushing with a slurry of neat cement and water.

c. At joints with existing concrete or concrete over 30 days old the surface of hardened concrete shall be roughened and then cleaned to remove all dust, loose aggregate particles or damaged concrete. Immediately prior to placing new concrete, the hardened concrete surface shall be coated with an epoxy bonding adhesive equal to Adhesive Engineering Co, "Concresive #1 Long Pot Life" applied in accordance with manufacturer's recommendations.

3H. DAMAGED OR DEFECTIVE CONCRETE

Concrete not conforming to the specifications or concrete damaged from any cause that is found defective shall be removed and replaced with acceptable concrete at no additional cost to the Government. Concrete test cylinders will be taken by the Government for the purpose of checking concrete quality of materials furnished. All concrete placed without approval by the Inspector shall be considered defective concrete and shall be subject to removal and replacement.

DIVISION 4. GROUT

4A. 'MATERIAL

Grout shall be a waterproof non--corrosive and non-shrink grout equal to EMBECO 636 Grout as manufactured by Master Builders.

48. WORKMANSHIP

All grouting shall be accordance manufacturer's instructions.

DIVISION 5. METALS

5A. METAL BUILDING

5A.01 General

The building shall be an all-metal prefabricated type erected from standard stock components supplied by an manufacturer regularly engaged in the fabrication of metal buildings. The building shall be complete in all respects, including doors, roof vents, hardware and all necessary painting, anchors, bolts, thrust angles or tie rod, fastenings and sealant required to provide an entirely weather-tight and dust-tight structure.

The building shall have a gable roof with a minimum slope of 3/4 in. rise for each 12 in. of horizontal run. Side and end walls shall be vertical. Interior bay supports shall be clear span. At ends of building, the support may be either clear span or beams with columns spaced to permit placement of doors and windows.

5A.02 Design Conditions

The building shall be designed to withstand the dead load of the structure plus a vertical live load of not less than 20 poinds per square foot of horizontal roof projection and a wind load of 25 pounds per square foot. Loads shall be applied to building surfaces and structural members as specified by MBMA "Recommended Design Practices Manual." Wind loads are to be applied inward and outward on sheeting and to have wind uplift rating.

The frames and other welded plate members shall be designated in accordance with the requirements of the American Institute of Steel Construction "Specification for the Design, Fabrication and Erection of Structural Steel for Buildings". All light gauge cold rolled steel structural members shall be designed in accordance with AISI "Specifications for the Design of Light Gauge Cold-formed Steel Structural Members." All welding shall conform to the requirements of the American Welding Society.

5A.03 Structural Steel

Main framing members shall be structural steel rigid frames or trapped' beam and columns. Secondary framing members shall consist of hot or cold rolled shapes and rods. Adjustable threaded rod cross bracing, purlins, girts, purlin and girt spacers, flange braces. and other necessary members shall be installed to provide structural integrity. Framing shall be provided at all wall openings. This framing shall be secured to structural elements of the building as required to reinforce the opening and provide anchorage for the finish frames. Connection angles shall be provided for design loading conditions specified in Division 5A.02. All members shall be full length without splices where feasible.

All structural steel shall comply with Federal Specification QQ-S-741D.

5A.04 Roofing and Siding

All exterior roof covering and siding shall be precision roll-formed

factory painted metal panels of steel. Sine curve corrugated panels are not acceptable. Roof and wall panels shall be formed from 26 gauge or heavier galvanized steel conforming to Federal Specification QQ-S-775D, Type I, Class D. Roof and wall panels shall be factory finished on both sides before forming with a thermosettling vinyl coating. Panel colors will be selected by the Engineer after award of the contract, from the manufacturer's standard colors.

Metals panels shall be precision roll-formed with a major corrugation at not more than 12 in. centers. The ridge cap shall be one piece from purlin to purlin on each side of the roof ridge. The ridge piece shall be factory-formed to match the roof slope and roof panel corrugation. The ridge piece shall be of the same material and finish as the roof panels. The gable fascia and roof trim pieces shall be formed from 26 gauge or heavier galvanized steel. All materials shall be factory painted to match the roof and/or wall panels.

All exposed wall panel fasteners shall be covered with a plastic cap of the same color as the metal panels.

Flashing material at roof vents shall be equal to Dow Chemical Co. "Saraloy 640R" plastic flashing.

Metal panels and accessories shall be installed in strict accordance with the panel manufacturer's recommendations and these specifications. Extra care shall be taken when field drilling holes to prevent buring or staining painted surfaces from drill shavings. Panels with burned or stained finish and panels that have been dented or otherwise damaged shall be replaced by the Contractor at his own expense.

Panels shall be applied with side laps of at least one full corrugation and at least 6 in. end lap at ridge cap. All panel ends shall be sealed with a resilient set in mastic top and bottom to insure a completely sealed structure. All side laps of both roof and wall panels shall be sealed with a 3/16 in. bead of permanently pliable mastic.

The Contractor shall furnish a S-year written guarantee backed by the panel manufacturer against roof panel finish failure by cracking, crazing, chipping, blistering, peeling, or loss of adhesion caused by installation procedures, normal exposure and service.

Guarantees shall provide for repainting in-place of failed panel finish and repair of leaks within 30 days after notification at no additional cost to the Government.

5A.05 Roof Vents and Fasteners

Ridge vent shall be furnished complete with operable damper equipped with a chain operator. Chain operator shall be sufficiently long to permit operation of the damper from the floor of the building and attachment to the nearest wall.

Ridge vent shall have a throat dimension of at least 9 in. wide and 12 ft. long. Ridge vent shall be fabricated from galvanized steel sheets, 28 ga. minimum thickness, painted the same color as the roof panels.

Ridge vent shall be stormproof, with enclosed ends and openings fitted with galvanized bird screen.

All bolts, nuts, washers, screws, embedded anchor bolts, and miscellaneous fasteners for field assembly of the metal building except those made of high tensile steel shall be galvanized, cadmium plated or stainless steel.

5B. MISCELLANEOUS METALS

5B.01 General

Steel shall be free from mill scale, flake rust or pitting. All Steel to be galvanized shall be hot-dipped galvanized in accordance with ASTM A-123. Galvanizing shall be after fabrication.

5B.02 Materials

5B.02a. STRUCTURAL STEEL SHAPES, PLATES AND BARS

Structural steel shapes, plates, and bars shall conform to Federal Specification QQ-S-741.

5B.02b. FASTENERS

All bolts, nuts and washers shall be galvanized, cadmium plated or stainless steel as noted. Cinch anchors shall be equal to Phillips Red-Head non-drilling flush anchors.

5B.02c. SCREEN

Screen shall be 4 x 4 x ,105 steel double weave woven wire as manufactured by Western Wire Works. Screens panels shall be furnished full size with no splices.

5B.02d. BAR GRATING

Bar grating shall be aluminum equal to Ryerson #19-AP-4 with l-l/2 x 3/16 in. bearing bars l-3/16 on center and 5/16 in. cross bars 4 in. on center. Maximum panel width shall be 3 ft. and minimum panel width shall be 18 in.

5B.03 Fabrication

Field welds of galvanized steel components will not be allowed unless so indicated on the drawings and all such field welds shall be painted wit Galvacon or equal.

The finished diameter of bolt holes shall not be more than l/16 in. larger than the nominal diameter of the bolt unless otherwise shown.

On all exposed metal surfaces all cuts, drilling, welds, etc., shall be smooth free of burrs, scale, jagged edges, etc. All grating cuts shall be saw cuts.

All welds shall be continuous and to the full strength of components unless specifically noted otherwise.

All shop fabrication shall be to the shapes and dimensions shown within l/l6 in.

5B.04 Installation

Embedded items shall be securely fastened in place to prevent displacement during placing and finishing. Tolerance in the finished work shall be l/4 in. for horizontal location dimensions and l/8 in. for elevations; however, all metal surfaces and edges shall be flush with adjacent concrete surfaces were applicable.

Movable items shall operate smoothly and easily without binding and fit the mating parts at all appropriate locations and orientations.

DIVISION 6. DOORS AND WINDOWS

6A. GENERAL

All doors shall be supported by the building framing members with sufficient braces, stiffeners and anchors to prevent any deflection due to wind or normal pressures. Wall panels shall be jointed closely, secured and sealed to the frames to provide a tight weather-proof seal. Caulk all door frames to provide weather-tight seal.

6B. OVERHEAD DOORS

Overhead door shall have clear opening dimensions of 10 ft. wide by 10 ft. high and shall be aluminum and fiberglass sectional upward-acting door equal to those manufactured by the Overhead Door Corporation. Door shall be fabricated from 6063-T6 aluminum alloy extruded shapes to produce a door nominal 2 in. thick. Center rails shall be designed with a weather joint. A neoprene weatherstrip shall be installed on bottom rail to seal the bottom of the door against weather. Fiberglass panels shall be deeply ribbed .04 in. minimum thickness and shall extend the full width of each section. Each panel shall consist of a single fiberglass panel securely fastened to the rails, end stiles and center stiles.

Door shall be accurately counterbalanced with torsion springs, tapered drums and corrosion resistant lift cables with chain hoist. Door shall be equipped with corrosion resistant hardware and ball bearing rollers. Tracks shall be 2 in. corrosion resistant steel mounted on corrosion resistant brackets or angles. Doors shall be equipped with tumbler locks with single unit lock mechanism and adjustable keepers on track.

6C. PASSAGE DOORS

All items of finish hardware shall be U.S. 26D or U.S. 28 finish. Door stops shall be Federal Specification FF-H-OOlllb (GSA-FSS) cast aluminum or cast bronze. Door stops shall be Type 1330E or 1330AE as appropriate for clearance of door above floor.

Hinges for steel door shall be Federal Specification FF-H-116c Type T2107, 4-l/2 by 4-l/2 full mortise, template, loose non-rising pin, ball bearing. Lock sets shall be Federal Specification FF-H-106, Type 161. Doors shall be furnished with hardware items as follows: (a) Door leaf shall have a floor mounted door stop, l-l/2 pair hinges, and (b) type 16lA lock set on exterior door, type 16lN on interior crew room door and type 16lT on rest room door.

All weatherstripping shall be fabricated using black neoprene. Sponge shall be closed-cell extreme temperature type meeting requirements for MIL R=6130A, Type 2, Grade C. Solid neoprene shall be extreme temperature type meeting requirements of MIL R-6855, Class 2, Grade 40. Fastener shall be stainless steel, self-tapping screws for all-weather strip application. Weather stripping for passage door head and jambs shall be extruded aluminum equal to Zero Weather Stripping Company No. 140.

Doors shall be equal to Steelcraft Manufacturing Company "Full Flush". Doors shall have seamless 18 ga. cold roll steel faces with honeycomb core, with thickness, size and swing as shown. Doors shall be welded construction, prepared for hardware specified, sound deadened bonderized and finished with one baked-on or epoxy shop prime coat. Doors shall be reinforced at closures, locks and hinges and shall be furnished with rigid vinyl top channel closures. Metal door frames shall be equal to Steelcraft Manufacturing Company 16 ga. cold rolled steel frames furnished with a least 3 jamb anchors and one floor anchor per jamb member. Frame face width shall be 2 in. nominal. All metal door frames shall be prepared for l-l/2 pair hinges with reinforcing and dust covers at hinges and strike. Steel frames shall be welded construction, fully bonderized and shop primed. Rubber mutes shall be installed at lock jamb.

Frames shall be set plumb and true securely anchored to jamb members and bottom of jamb shall be anchored to concrete. Flashing and sheet metal trim shall have mastic applied at laps and junctions to insure a weather-tight structure.

6D. WINDOWS

Windows shall be dual glazed double strength Type II, Class 1, Quality 6 or better glass. Glazing shall be installed with sealants and sealing tapes as recommended by the glazing manufacturer. Each piece of glass shall bear the manufacturer's label identifying type, thickness and quality of the glass. Window shall be single horizontal sliding, fabricated from stock extruded aluminum sections with anodized finish and shall meet the requirements of AAMA Specification HS-B2. Window shall have at least half of its area operable and shall be furnished with an insect screen.

DIVISIONS 7, 8, 9, 10, 11, 12, 13, and 14

These Divisions are not applicable to work under this contract.

DIVISION 15. MECHANICAL

15A. GENERAL

15A.01 Scope

Work covered by this section includes furnishing and installing all piping, valves, slide gates and testing of all systems.

15A.02 Codes and Abbreviations

ASTM: American Society for Testing and Materials
AWWA: American Water Works Association

15B. PIPING

The work covered by this section includes furnishing and installing the piping systems shown on the drawings.

The types of material to be used in the piping systems are shown on the drawings. Specifications for each type of material are listed hereinafter, All piping systems shall be constructed from the materials shown and to the lines, grades and dimensions shown. Where not shown, the pipes shall be located to avoid interference with other features and sloped a minimum of 0.001 to drain.

All piping systems shall be plugged, tested and left ready for use.

15B.01 Materials

15B.Ola PVC SUPPLY PIPE AND FITTINGS

Pipe and fittings shall be made from ASTM D1784, Type I, Grade 1 PVC.

Pipe shall comply with AWWA C900, Class 160, SDR 26 or ASTM D1785, Schedule 40.

Fittings shall be socket type complying with ASTM D2467. Solvent cement for socket joints shall comply with ASTM D2564 made especially for PVC piping. .

15B.Olb PVC DRAIN PIPE

Pipe and fittings shall be rubber gasketed complying with ASTM D3034, made from material complying with ASTM D1784, Type I, Grade I.

15B.Olc STEEL PIPE AND FITTINGS

Steel pipe shall conform to ASTM A-53, with 3/16 in. minimum wall thickness. Steel pipe to be buried in the ground shall be coated and wrapped in accordance with AWWA C203 finished with a single wrap craft paper. The

minimum number of sections for each fabricated fitting shall be as follows:

0 through 22-1/2°	2 sections (1 miter)
over 22-1/2° through 45°	3 sections (2 miters)
over 45° through 67-1/2°	4 sections (3 miters)
over 67-1/2° through 90°	5 sections (4 miters)

The centerline length of each piece between miters shall not be less than l/2 the nominal pipe diameter.

Steel pipe joints shall be flanged, welded, bell and spigot, or flexible . coupling connected.

Pipe flanges shall conform to AWWA C207 Class D flanges except where noted as Class B flanges. Flanges to be welded or screwed on shall be shop or factory mounted and refaced after mounting. Gaskets for flanges shall be full facing rubber gaskets cut from l/4 in. thick Buna N rubber sheet stock with Durometer rating 65/76 or shall be factory formed, l/4 in. nominal thickness of equal quality material..

Welded joints shall be single butt weld type in conformance with AWWA C208, Table 1. Welded connections shall be coated in accordance with AWWA C203-73.

Bell and spigot ends shall be in accordance with AWWA C200-75 Section 3.7.7. Spigot ends shall have groove for confining rubber gasket.

Flexible couplings for connecting steel pipe to steel pipe or for connecting steel pipe to PVC pressure pipe shall be equal to Smith Blair 411 with corrosion resistant nuts and bolts. Flexible couplings for connecting steel pipe to PVC drain pipe shall be Smith Blair 413 with corrosion resistant bolts.

Field procedure and coal tar enameling of couplings shall in accordance with AWWA C203.

15B.Old CAST IRON SOIL PIPE AND FITTINGS

Cast iron soil pipe and fittings shall comply with Cast Iron Soil Pipe Institute Standard No. 201-72.

15B.02 Pipe Handling and Transportation

During loading, transportation, unloading and laying or installation, every precaution shall be taken to prevent injury or damage to the pipes. Use strap slings for lifting coated pipes.

Coated and wrapped steel 'pipe shall be handled and transported in accordance with AWWA C203 Section 4.1.

Any section of pipe with a damaged end or barrel shall be repaired as directed if in the opinion of the Engineer a satisfactory repair can be

made; otherwise, the damaged section shall be replaced with an undamaged section at the expense of the Contractor.

15B.03 Installation

15B.03a GENERAL

Buried pipe lines shall be installed only in the presence of the Inspector. Excavation and backfill shall be as specified in paragraph 2B.

Pipe trenches shall be kept free of water which might impair joining operations at all times when pipe is being placed.

In case defects are revealed by inspection, the Contractor shall replace the defective pieces and shall bear the expense. All pipe and fittings shall be carefully cleaned before laying. Precautions shall be taken to prevent foreign material from entering the pipe. Pipe shall be laid with bell ends facing in the direction of laying and generally on an uphill direction unless otherwise directed. Pipe shall be cut only to remove defective places or for closing pieces. Such cuts shall be made square.

Pipe shall be laid on a prepared bed of the specified depth and gradation. The bedding shall be placed in the excavated trench and shall be compacted. Depressions for pipe bells and couplings shall be hand excavated. After the bedding has been compacted, the top 1 in. shall be loosened to provide cushioning for uniform pipe support. To insure full bearing of the pipe on the bedding material, the pipe shall be lifted after initial placement to allow the Inspector to view the depression left by the pipe. If full bearing is not evident, the bedding surface shall be reshaped or additional bedding material added until full bearing is achieved.

All laying operations to provide water-tight pipe and pipe joints shall be the responsibility of the Contractor. If adjustment of the position of a length of pipe is required after it has been laid, it shall be removed and rejoined as for a new pipe. Prior to acceptance the inside of the pipe shall be cleaned and all debris removed.

The pipe units shall be fitted together and the joints shall be drawn together so that the bells and spigots are as nearly fully engaged as practicable. Care shall be exercised to secure true alignment. The rubber gaskets shall be fitted properly in place and lubricated as necessary, and the pipe shall be fitted together in a manner to avoid twisting or otherwise displacing or damaging the gaskets.

Thrust blocking shall be provided as required on all changes of direction in the pipe lines such as: opposite branch connections of tees or wyes, outside bends or elbows either horizontal or vertical, at reducing changes in diameter, at dead ends and any otherplaces where forces due to pressure or flow of water may develop. Thrust blocking ‘shall equal or exceed the pipe manufacturer's recommendations for applicable test pressures listed in the Test Schedule in Division 15D. and a soil bearing strength of 2000 lb. per sq. ft.‘

Exposed piping shall be run parallel and square with the lines of the structures unless otherwise indicated. Pipes shall be accurately cut to allow assembly without springing or forcing. Pipe to be embedded in concrete shall be secured in placed to prevent displacement during

concrete placement. Do not weld embedded pipe to reinforcing steel. Embedded pipes without seep collars may at' the Contractor's option be grouted into blockouts. Grouting shall be accordance with Division 4. All buried piping shall have a flexible joint or coupling within 2 ft. of the concrete surface whether shown on the drawings or not.

15B.03b PVC PIPE AND FITTINGS

Plastic pipe shall be installed in accordance with the manufacturer's instructions, except that bedding shall be in accordance with Division 2D.02a. Install electronically-detectable plastic tape 1 ft. below finished grade over all plastic pipe buried in the ground. Tape to be Allen "DETECTATAPE" 3 in. wide and imprinted continuously “BURIED WATER LINE BELOW" or other appropriate wording approved by the Engineer.

15B.03c. STEEL PIPE

Field welding of steel pipe shall be in accordance with AWWA C206. Galvanized piping shall not be field welded.

Flanged pipe shall be installed using full-facing rubber gaskets between each pair of mating flanges. Gaskets shall be cut from l/4 in. thickness of Buna N rubber sheet stock with Durometer rating of 65/76 or shall be factory formed, l/4 in. nominal thickness of equal quality material. All bolts shall be installed in flanged pipe but shall not be tightened until the complete run of piping has been installed and aligned. Bolts shall be tightened uniformly to a torque of 30 to 40 foot-pounds for 5/8 in. bolts, 50 to 65 foot-pounds for 3/4 in. bolts, 80 to 100 foot-pounds for 7/8 in. bolts and 120 to 150 foot-pounds for 1 in. bolts. Bolts threads and nut bearing surfaces shall be lubricated before tightening.

Threaded joints shall have a thread joint compound applied to a the male threads before making the joint.

Coated and wrapped steel pipe shall be handled and stored at the installation site in a manner that will prevent damage to the pipes, coatings and wrappings. Pipes shall be lowered into the trench by means of wide belt slings. Chains, cables, tongs or other equipment likely to damage the coating will not be permitted, nor will dragging or skidding the pipe. The Contractor shall allow the Inspector to examine the underside of the pipe. Any damaged areas shall be repaired before lowering the pipe into the trench. During installation, every precaution shall be used to prevent damage to the coating. No metal tools or heavy objects shall be permitted to come in contact with the coating. Workmen will not be permitted to walk on the pipe unless necessary and in case of such necessity, the workmen shall wear shoes with rubber or composition rubber heels. Any damage to the pipe or coating shall be repaired at the expense of the Contractor as directed by the Engineer. All field joints shall be by means of flexible couplings, bell and spigot ends, threaded couplings or flanges. No field welding will be permitted. Couplings and exposed pipe ends shall be reprimed in the field. When the primer is dry, these surfaces shall be coated with AWWA coal tar enamel recommended by the manufacturer of the coating used on the pipe. The coating shall be capable of conforming to the normal movement of the buried pipe without cracking.

15B.03d CAST IRON SOIL PIPE AND FITTINGS

Unless detailed otherwise, the installation of cast iron soil pipe shall

be as recommended in Cast Iron Soil Pipe Institute Pamphlet No. 100, except that soil pipe laid in trenches shall not be supported with masonry blocks at couplings and bedding shall be in accordance with Division 2D.02a.

Assembly of joints shall as recommended by the manufacturer.

15C. VALVES AND SLIDE GATES

15c.01 Slide Gates

Slide gates shall be Waterman C20 with minimum frame heights and rising stem extensions as shown or full frame heights. Frame parts, stem extensions, anchor bolts and assembly bolts shall be galvanized. Lift nuts shall be cast bronze. Tops of all stem extensions or tops of all full frames shall be fastened to adjacent concrete walls with galvanized pipe clamps Fee & Mason Fig. 366 or anchor bolts. Installation shall be as recommended by the manufacturer. Embedded parts shall be built into forms and embedded directly in cast-in-place concrete or grouted into blockouts. Grouting shall be as specified in Division 4.

15C.02 Butterfly Valves Larger Than 6 Inches

Butterfly valves shall be Pratt Goundhog line size Class 150 butterfly valves with buried service manual operators conforming to AWWA C504-74 with the following additional requirements.

1. Valve shafts material shall be stainless steel Type 302, 303, 304 316 or Monel.

2. Rubber seat thickness shall be in accordance with Table 4 in AWWA c504-70.

3. Valve discs shall be alloy cast iron (conforming to ASTM A-436, Type 1 or 2, or ASTM A-439 Type D2, with a maximum lead content of 0.003 percent) or stainless steel ASTM A-276 Type 304 or 316.

4. Operators shall have adjustable internal stops.

5. Valves shafts shall be securely attached to the valve discs by means of keys, dowel pins, taper pins or any combination of the three. The connections between the shaft and disc shall be designed to transmit shaft torque equivalent to at least 75% of the torsional strength of the minimum required shaft diameters. Dowels and taper pins shall be mechanically secured.

Buried valves shall be equipped with cast iron slip-type valve boxes and covers, extension stems and Pratt Diviner ground level position indicator. Valve box shall have sufficient overlap to permit a top adjustment 6 in. higher than the present elevations.

Exposed butterfly valves shall be flanged and equipped with cast iron floor boxes and covers, extension stems and Pratt Diviner groundlevel position indicator. Top of floor boxes shall be fastened to adjacent concrete walls with offset pipe clamp equal to Fee & Mason Fig. 366.

15c.03 Butterfly Valves (6 Inches and Smaller)

Butterfly valves shall be PVC rubber seated butterfly valve as manufactured by Celanese Piping Systems with 316 stainless steel shaft, teflon coated top and bottom bearings, O-ring shaft seals, steel lever and operator assembly. Shaft shall be square through the disc body. Lever and operator assembly shall be equipped with device for holding valve in open, closed or throttled positions. All PVC to be ASTM D1784 Type I, Grade 1 material .

15c.04 Ball Valves

Ball valves shall be single union PVC ball valves as manufactured by Celanese Piping Systems with teflon ball seats, O-ring seals on stems, O-ring seals between end connectors and carriers, O-ring seals between valve bodies and carriers. All PVC to be ASTM D1784 Type I, Grade 1 material.

15c.05 Gate Valves

Gate valves shall be equal to M&H NRS-Style 67 with bronze mounted cast iron body, cast iron discs with bronze seats, bronze stem, 2 in. square operating nut, double O-ring stem seals, cast iron slip-type valve boxes and covers, extension stems to place 2 in. square operating nut 3 in. below the box covers. Valve box shall have sufficient overlap to permit top adjustments 6 in. higher than present elevations.

15C.06 Valve Wrenches

Valve wrenches (two required) shall be T handle socket wrench to fit 2 in. square nut as made by M & H Division of Dresser Manufacting. Stems shall be 4 ft. long.

15D. TESTING

Flush all piping until clean. Test piping as a system or in sections.

Furnish all necessary pumps, valves, gauges, meters and labor for all testing. Notify inspector in writing 3 days in advance of test. Repair any leaks and re-test. Dispose of surplus water from testing. Tests of piping in the ground shall be made with the pipe backfilled to a depth of 12 in. with all joints and couplings left exposed for inspection. Concrete thrust blocks shall have cured for a minimum of 24 hours before testing. All tests shall be made for a minimum of 4 hours with water or as indicated. Allow a minimum of 24 hours after filling system for natural absorption before starting tests. Clean up after testing.

PIPING TEST SCHEDULE

Systern	Test Pressure	Results
Supply Pipes (Not buried)	25 psig	No loss in pressure or visible leaks.
Supply Pipes (buried)	25 psig	Leakage not to exceed l-1/2 gal. per in. of diameter per 100 ft. in 24 hours. No visible leaks
*Drain Pipes	Fill to highest point	Leakage not to exceed 5 gals. per in. of diameter per 100 ft. in 24 hours. No visible leaks.

* In lieu of this method, the Air Test Method published by International Pipe andceramics (Interpace) in their bulletin "Procedure for Leak Locating With Low Pressure Air: may be used.

MINTHORN SPRINGS

CONSTRUCTION COST ESTIMATE

Item	Quantity	Unit	Unit Price	Cost
		PHASE 1		
1. Entrance Road Bridge Replacement	1	Job	$ -	$11,700.00
2. Entrance Road Reshape Existing Base	1225	LFT	3.50	4,290.00
3. Entrance Road New Base Course	1650	LFT	18.45	30,445.00
4. Remove Existing Structures clear stream & improve flow line	1	Job	-	6,800.00
5. Site Grading & Clearing	1	Job	-	6.800.00
6. Settling Pond	1	Job	-	14,500.00
7. Intake Structure	1	Job	-	34,000.00
8. Rearing Pond Supply Piping	1	Job	-	25,400.00
9. Rearing Ponds	3	Ponds	29,900	89,700.00
10. Rearing Pond Drains	1	Job	-	4,100.00
11. Drain Control Structure	1	Job	-	22,300.00
12. Drain Control Structure 15" Drain	1	Job	-	15,700.00
13. Drain Control Structure 12" Drain	1	Job	-	11,300.00
14. Hatchery Troughs w/supply and drain	1	Job	-	30,000.00
15. Flood Control Dike	500	LFT	11.25	5,625.00
			Phase 1 Total:	$312,660.00
		PHASE 2		
1. Spawning/Holding Facility	1	Job	-	$52,800.00
2. Hatchery Building	1	Job	-	62,500.00
3. Security Fence & Gates	1	Job	-	13,200.00
4. Gravel Surfacing	8500	SY	5.80	49,300.00
			Phase 2 Total:	$177,800.00
			Grand Total (Phase 1&2):	490,460.00

EXHIBIT 8A

MINTHORN SPRINGS

CONSTRUCTION COST ESTIMATE

Item	Quantity	Unit	Unit Price	Cost
OPTIONAL FUTURE CONSTRUCTION				
1. Complete Hatchery Bldg. Interior (electrical, plumbing, feed freezer, septic tank & drain field)	1	Job	-	$40,500.00
2. Automatic Feeders	1	Job	-	26,300.00
3. Alarm and Monitor systems	1	Job	-	12,000.00
4. Residential Trailer Pad & Utilities	1	Job	-	26,000.00
5. Telephone Service	1	Job	-	2,000.00
6. Timber rack & Fish Trap	1	Job	-	8,000.00
7. Spawning facility mechanical lifts	1	Job	-	48,000.00
			Optional Total:	$163,300.00

EQUIPMENT

1. Pumps - portable	$5,000.00
2. Nets, brushes, etc.	1,000.00
3. Small tools, scales, buckets, etc.	3,000.00
4. Desk & chairs, files	1,500.00
5. Storage racks & work bench	1,500.00
6. Fish Transport box	8,000.00
Equipment Total	$20,000.00

BONIFER SPRINGS

CONSTRUCTION COST ESTIMATE

Item	Quantity	Unit	Unit Price	Cost
	PHASE 1			
1. Railroad Crossing	1	Job	-	$51,200.00
2. Access Road & Settling pond	1	Job	-	16,700.00
3. Remove Existing Structures	1	Job	-	7,200.00
4. Lower existing culvert & site grading	1	Job		5,700.00
5. Spring #1 Intake Structure	1	Job		24,100.00
6. Spring #3 Intake Structure	1	Job	-	34,000.00
7. Spring #3 Intake Pipe	850	LFT	$53.90	45,815.00
8. Spring #1 Intake Pipe	1750	LFT	29.40	51,450.00
9. Water Control Structure	1	Job		25,500.00
10. Water Control Structure Drain	85	Job	60.00	5,100.00
11. Rearing Pond Supply Piping	1	LFT	-	18,900.00
12. Rearing Ponds	4	EA	22,100	88,400.00
13. Rearing Pond Drains	1	Job		5,100.00
14. Drain Control Structure	1	Job		20,300.00
15. Drain Control Structure 15" Drain	1	Job	-	13,200.00
16. Drain Control Structure 12" Drain	1	Job	-	7,000.00
17. Hatching Troughs w/supply and drain piping	1	Job	-	30,600.00
18. Spawning Facility 4" supply	1	Job	-	1,500.00
			Phase 1 Total:	$451,765.00
	PHASE 2			
1. Spawning/Holding Facility	1	Job	-	$46,600.00
2. Hatchery Building	1	Job	-	63,000.00
3. Security Fence & Gates	1	Job	-	14,000.00
4. Gravel Surfacing	2900	SY	620	17,980.00
			Phase 2 Total:	$141,580.00
			Grand Total (Phases 1&2):	593,345.00

EXHIBIT 8B

BONIFER SPRINGS

CONSTRUCTION COST ESTIMATE

Item	Quantity	Unit	Unit Price	Cost
OPTIONAL FUTURE CONSTRUCTION				
1. Complete Hatchery Bldg. Interior (electrical, plumbing, feed freezer)	1	Job		$31,000.00
2. Automatic Feeders	1	Job		35,000.00
3. Alarm and Monitor systems	1	Job		15,000.00
4. Residential Trailer Pad & Utilities	1	Job		24,000.00
5. Telephone Service	1	Job		2,000.00
6. Timber rack & Fish Trap	1	Job		12,000.00
7. Trap access road	1	Job		16,000.00
8. Spawning facility mechanical lifts	1	Job		48,500.00
			Optional Total:	$183,500.00

EQUIPMENT

1. Pumps - portable	$5,000.00
2. Nets, brushes, etc.	1,000.00
3. Small tools, scales, buckets, etc.	3,000.00
4. Desk & chairs, files	1,500.00
5. Storage racks & work bench	1,500.00
6. Fish Transport box	8,000.00
Equipment Total	$20,000.00